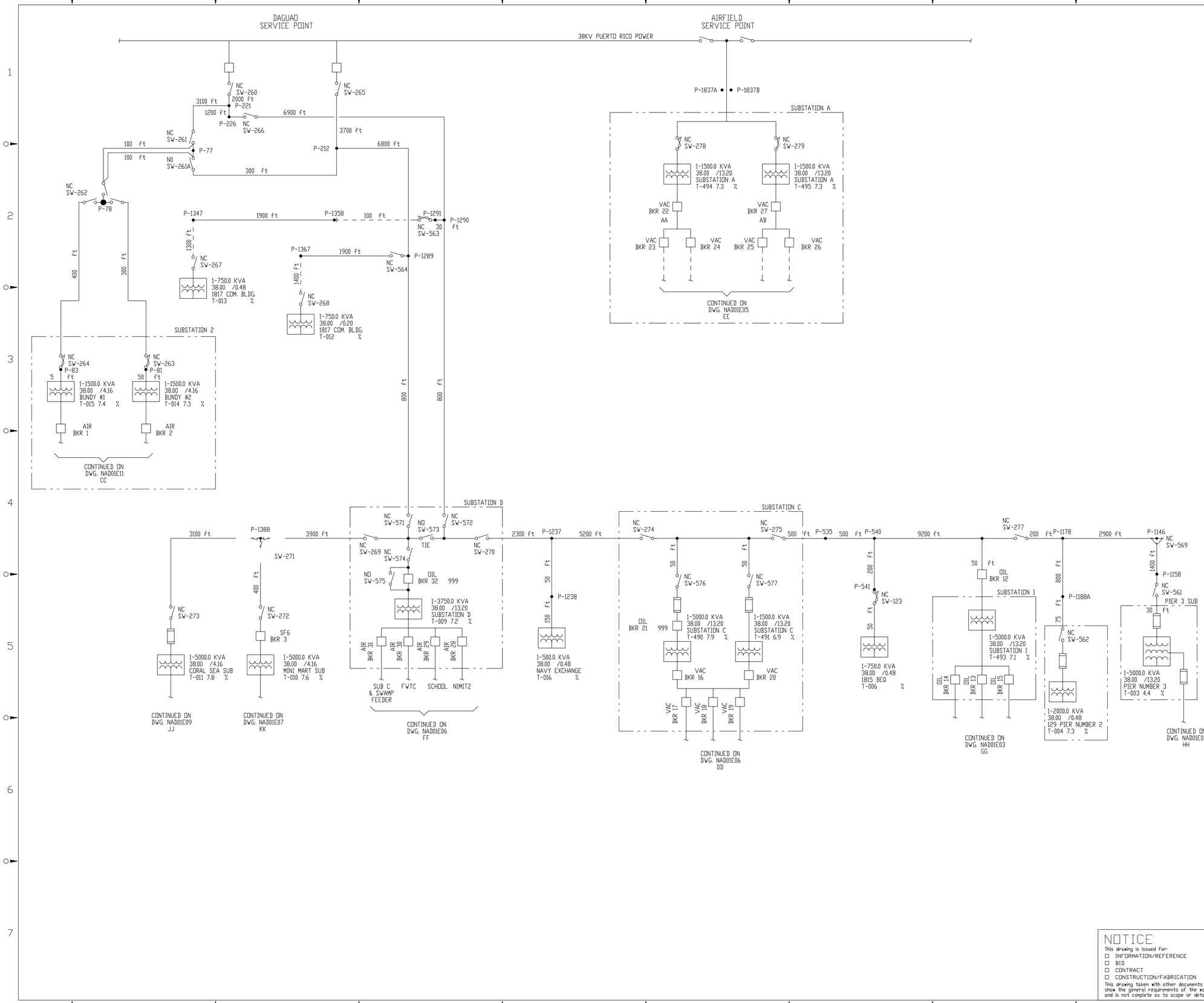

NOTES:

1. ALL OVERHEAD 38KV CONDUCTORS ARE #1/0 BARE COPPER. ALL UNDERGROUND 38KV CONDUCTORS ARE #1/0 XLP, UNLESS OTHERWISE NOTED.

LEGEND:

CAPACITOR — C-600 — ID NUMBER

BREAKER — NO VAC BKR 4 — NORMAL OPERATING POSITION — INTERRUPTING MEDIUM — CONTINUOUS CURRENT RATING — ID NUMBER

SWITCH TEXT (TYP.)

DISCONNECT SWITCH — NORMAL OPERATING POSITION — AMPERE RATING — NC SW-288

FUSED SWITCH/CUTOUT — ID NUMBER

SELECTOR SWITCH

GOABS - GROUP OPERATED AIR BREAK SWITCH — 3-WAY — 2-WAY

TRANSFORMER TEXT (TYP.)

PRIMARY/SECONDARY VOLTAGES — 3-25.00 KVA — 13.20 /0.48 — BLDG. 2052 — LOCATION — % — T-421 — ID NUMBER — IMPEDANCE — KVA RATING

TRANSFORMER - POLE MOUNTED

TRANSFORMER - PADMOUNTED

POLE/CONNECTION

OVERHEAD LINE

UNDERGROUND LINE

FUSE

NO	DATE	DESCRIPTION	DRAWN	CHECKED	DES.SUPV.	RESP.ENGR.	SUP.DISC.ENG.	CH.DISC.ENG.	PR.ENG.MGR.	MP
0	09 25 95	AS BUILT	TC	RD	KK	RS				

DRAWN BY: T. COLLINS
CHECKED BY: K. FUSSELL
DESIGN SUPV.:
RESP.ENGR.: P. SCIABARRASI
SUPV.DISC.ENGR.:
CH.DISC.ENGR.:
PROJECT ENG.MGR.:
PROJECT MGR.:
IN CHARGE:

PARSONS MAIN, INC.
CHARLOTTE • BOSTON • PASADENA

CLIENT/PROJECT TITLE
NAVACENCOM ATLANTIC DIV
ELECTRICAL DISTRIBUTION

DEPT.
NO.

DRAWING DESCRIPTION
ROOSEVELT ROADS, P.R.
ELECTRICAL SINGLE LINE
38.0 KV

SCALE: NTS
PLOT SCALE= 1 : 12

DWG. NO.: NAD01E01
REV.: 0

NOTICE

This drawing is issued for:
- ☐ INFORMATION/REFERENCE
- ☐ BID
- ☐ CONTRACT
- ☐ CONSTRUCTION/FABRICATION

This drawing taken with other documents show the general requirements of the work and is not complete as to scope or detail.

PROJECT/FILE: $$$DGNSPEC$$$$$$$$$$$$$$$$$$$$
DATE: $$$DATE$$$$$$$$$$$$ NAME: ELEC/TC

ARCH HVAC I & C ELECT MECH CIVIL STRUC

P:\pr\19-Ceiba\1741.0 ROOSEVELT RD AE CONSULT\Job 16 Infrastructure Data\Electric\Drawings-Maps\CAD Drawings\System Drawings 1995\NAD01E01.DWG, 3/15/2018 1:41:22 PM, DWG To PDF.pc3

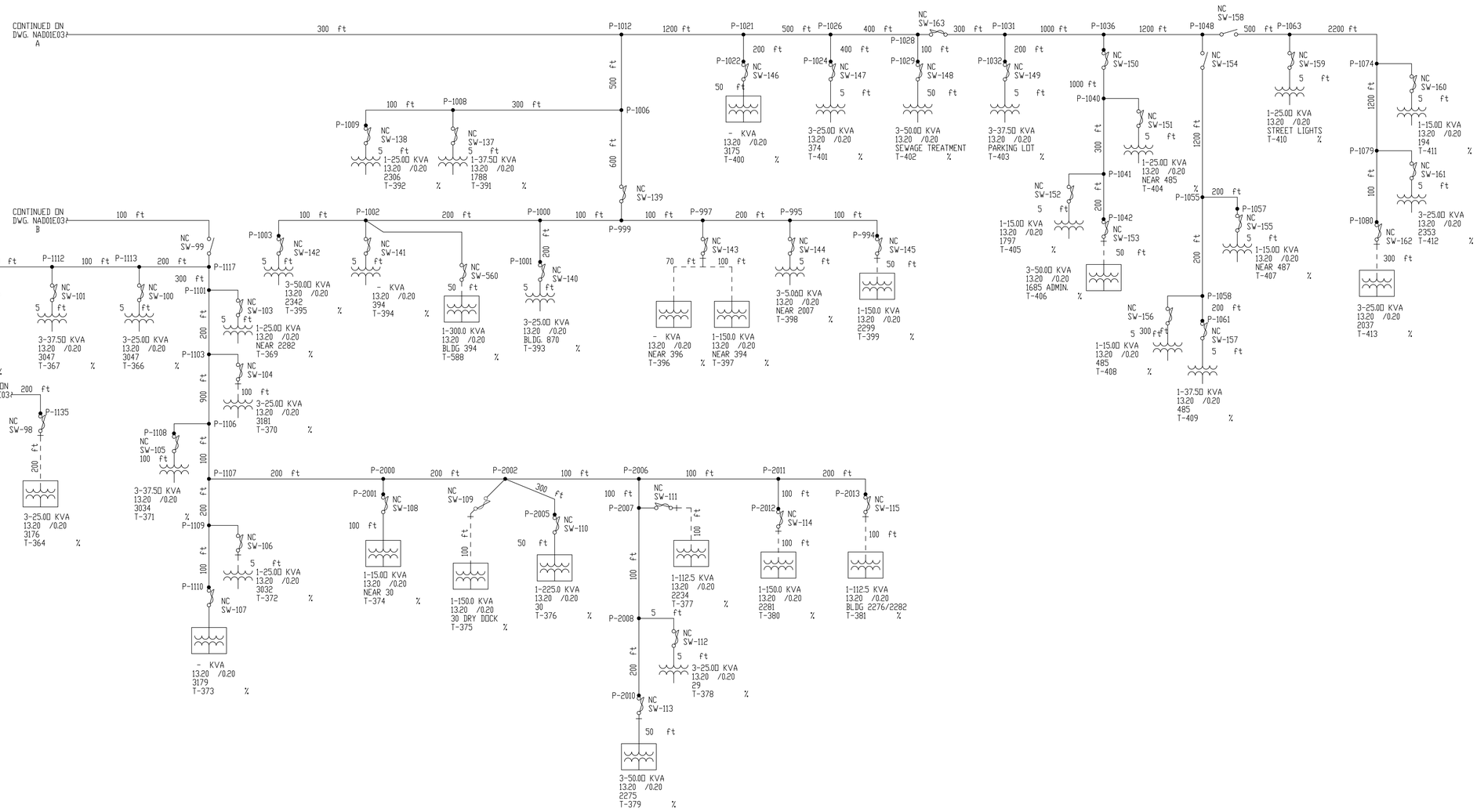

NOTES:

1. FOR 13.8KV LINES, ALL OVERHEAD CONDUCTORS ARE #2/0 HDBC AND ALL UNDERGROUND CONDUCTORS ARE #4/0 XLP, UNLESS OTHERWISE NOTED.

LEGEND:

CAPACITOR — C-600 — ID NUMBER

BREAKER — NO BKR 4 — NORMAL OPERATING POSITION; VAC — INTERRUPTING MEDIUM; CONTINUOUS CURRENT RATING; ID NUMBER

SWITCH TEXT (TYP.)

DISCONNECT SWITCH — NC SW-288 — NORMAL OPERATING POSITION; AMPERE RATING

FUSED SWITCH/CUTOUT — ID NUMBER

SELECTOR SWITCH

TRANSFORMER TEXT (TYP.)

PRIMARY/SECONDARY VOLTAGES — 3-25.00 KVA 13.20 /0.48 BLDG. 2052 T-421 — KVA RATING; LOCATION; IMPEDANCE; ID NUMBER

TRANSFORMER - POLE MOUNTED

TRANSFORMER - PADMOUNTED

POLE/CONNECTION

OVERHEAD LINE

UNDERGROUND LINE

NO	DATE	DESCRIPTION	DRAWN	CHECKED	DES.SUPV.	RESP.ENGR.	SUP.DISC.ENG.	CH.DISC.ENG.	PR.ENG.MGR.	MP
0	09 25 95	AS BUILT	JC	PS	AS	PS				

DRAWN BY: T. COLLINS
CHECKED BY: K. FUSSELL
DESIGN SUPV.:
RESP.ENGR.: P. SCIABARRASI
SUPV.DISC.ENGR.:
CH.DISC.ENGR.:
PROJECT ENG.MGR.:
PROJECT MGR.:
IN CHARGE:

PARSONS MAIN, INC.
CHARLOTTE • BOSTON • PASADENA

CLIENT/PROJECT TITLE
NAVFACENCOM ATLANTIC DIV
ELECTRICAL DISTRIBUTION

DEPT.
NO.

DRAWING DESCRIPTION
ROOSEVELT ROADS, P.R.
ELECTRICAL SINGLE LINE
13.2KV (SHEET 1 OF 5)

SCALE
PLOT SCALE= 1 : 12

DWG. NO. NAD01E02
REV. 0

NOTICE
This drawing is issued for:
☐ INFORMATION/REFERENCE
☐ BID
☐ CONTRACT
☐ CONSTRUCTION/FABRICATION
This drawing taken with other documents show the general requirements of the work and is not complete as to scope or detail.

PROJECT/FILE: $$$DGNSPEC$$$$$$$$$$$$$$$$$$$$
DATE: $$$DATE$$$$$$$$$$$$$$ NAME: ELEC/TC

ARCH HVAC I & C ELECT MECH CIVIL STRUC

P:\pr\19-Ceiba\17410 ROOSEVELT RD AE CONSULT\Job 16 Infrastructure Data\Electric\Drawings-Maps\CAD Drawings\System Drawings 1995\NAD01E02.DWG, 3/15/2018 1:42:04 PM, DWG To PDF.pc3

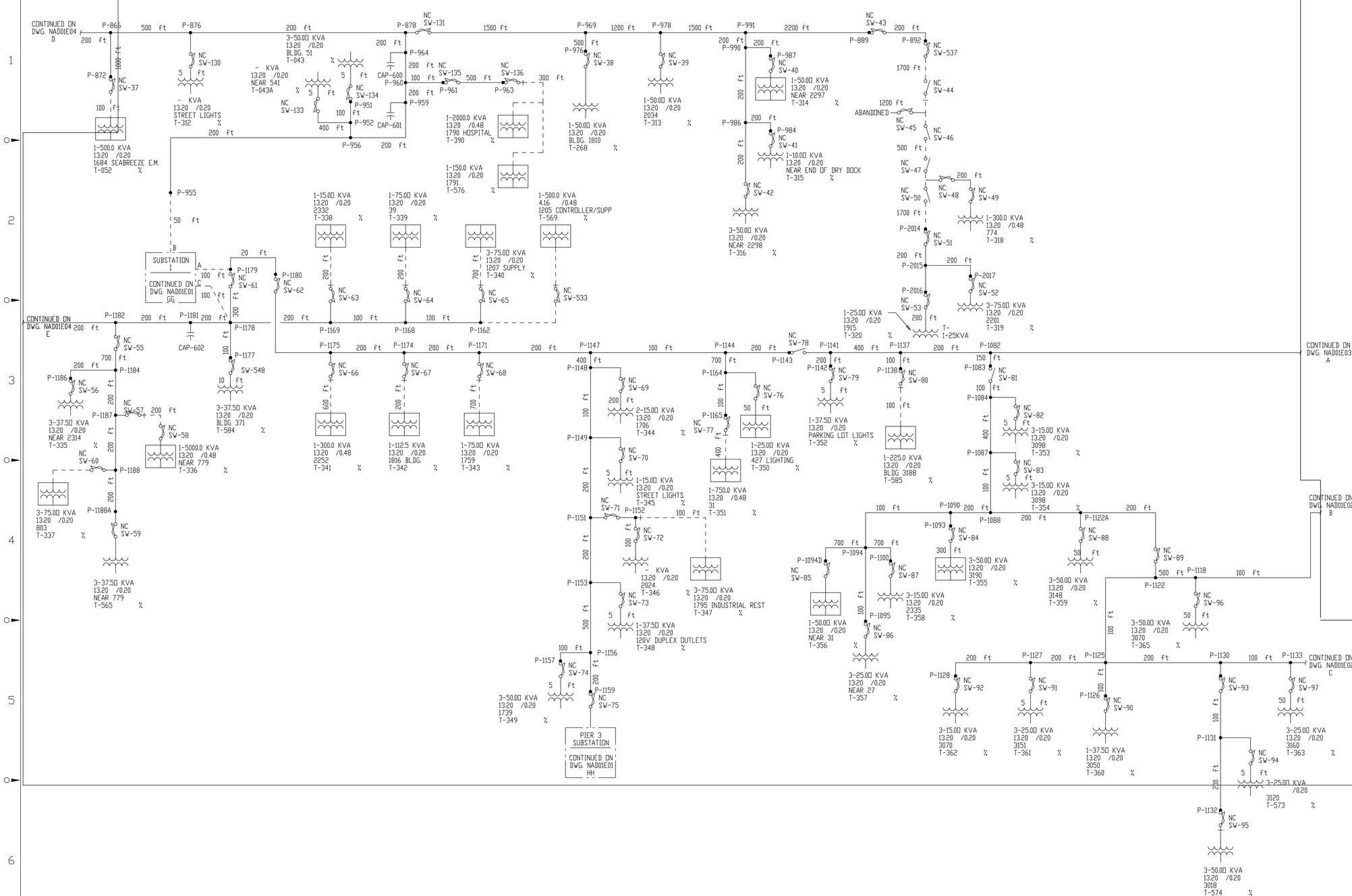

NOTES:

1. FOR 13.8KV LINES, ALL OVERHEAD CONDUCTORS ARE #2/0 HDBC AND ALL UNDERGROUND CONDUCTORS ARE #4/0 XLP, UNLESS OTHERWISE NOTED.

LEGEND:

CAPACITOR — C-600 — ID NUMBER

BREAKER — NORMAL OPERATING POSITION — NO — VAC — INTERRUPTING MEDIUM — BKR 4 — CONTINUOUS CURRENT RATING — ID NUMBER

SWITCH TEXT (TYP.)

DISCONNECT SWITCH — NORMAL OPERATING POSITION — AMPERE RATING — NC SW-288

FUSED SWITCH/CUTOUT — ID NUMBER

SELECTOR SWITCH

TRANSFORMER TEXT (TYP.)

PRIMARY/SECONDARY VOLTAGES — KVA RATING — 3-25.00 KVA 13.20 /0.48 BLDG. 2052 T-421 — LOCATION — IMPEDANCE — ID NUMBER

TRANSFORMER - POLE MOUNTED

TRANSFORMER - PADMOUNTED

POLE/CONNECTION

OVERHEAD LINE

UNDERGROUND LINE

NO	DATE	DESCRIPTION
0	09 25 95	AS BUILT

DRAWN	CHECKED	DES.SUPV.	RES.ENGR.	SUP.DISC.ENG.	CH.DISC.ENG.	PR.ENG.MGR.
T.C.	K.F.	P.S.				MF

DRAWN BY: T.COLLINS — CHECKED BY: K. FUSSELL
DESIGN SUPV. — RES.ENGR.: P. SCIABARRASI
SUPV.DISC.ENGR. — CH.DISC.ENGR.
PROJECT ENG.MGR.
PROJECT MGR.
IN CHARGE

PARSONS MAIN, INC.
CHARLOTTE • BOSTON • PASADENA

CLIENT/PROJECT TITLE
NAVFACENCOM ATLANTIC DIV
ELECTRICAL DISTRIBUTION

DEPT. — NO.

DRAWING DESCRIPTION
ROOSEVELT ROADS, P.R.
ELECTRICAL SINGLE LINE
13.2KV (SHEET 2 OF 5)

SCALE — PLOT SCALE= 1 : 12

DWG. NO. NAD01E03 — REV. 0

NOTICE

This drawing is issued for:
- ☐ INFORMATION/REFERENCE
- ☐ BID
- ☐ CONTRACT
- ☐ CONSTRUCTION/FABRICATION

This drawing taken with other documents show the general requirements of the work and is not complete as to scope or detail.

PROJECT/FILE: $$$DGNSPEC$$$$$$$$$$$$$$$$$$$$
DATE: $$$DATE$$$$$$$$$$$$ NAME: ELEC/TC

ARCH | HVAC | I & C | ELECT | MECH | CIVIL | STRUC

P:\pr\19-Ceiba\1741.0 ROOSEVELT RD AE CONSULT\Job 16 Infrastructure Data\Electric\Drawings-Maps\CAD Drawings\System Drawings 1995\NAD01E03.DWG, 3/15/2018 1:42:44 PM, DWG To PDF.pc3

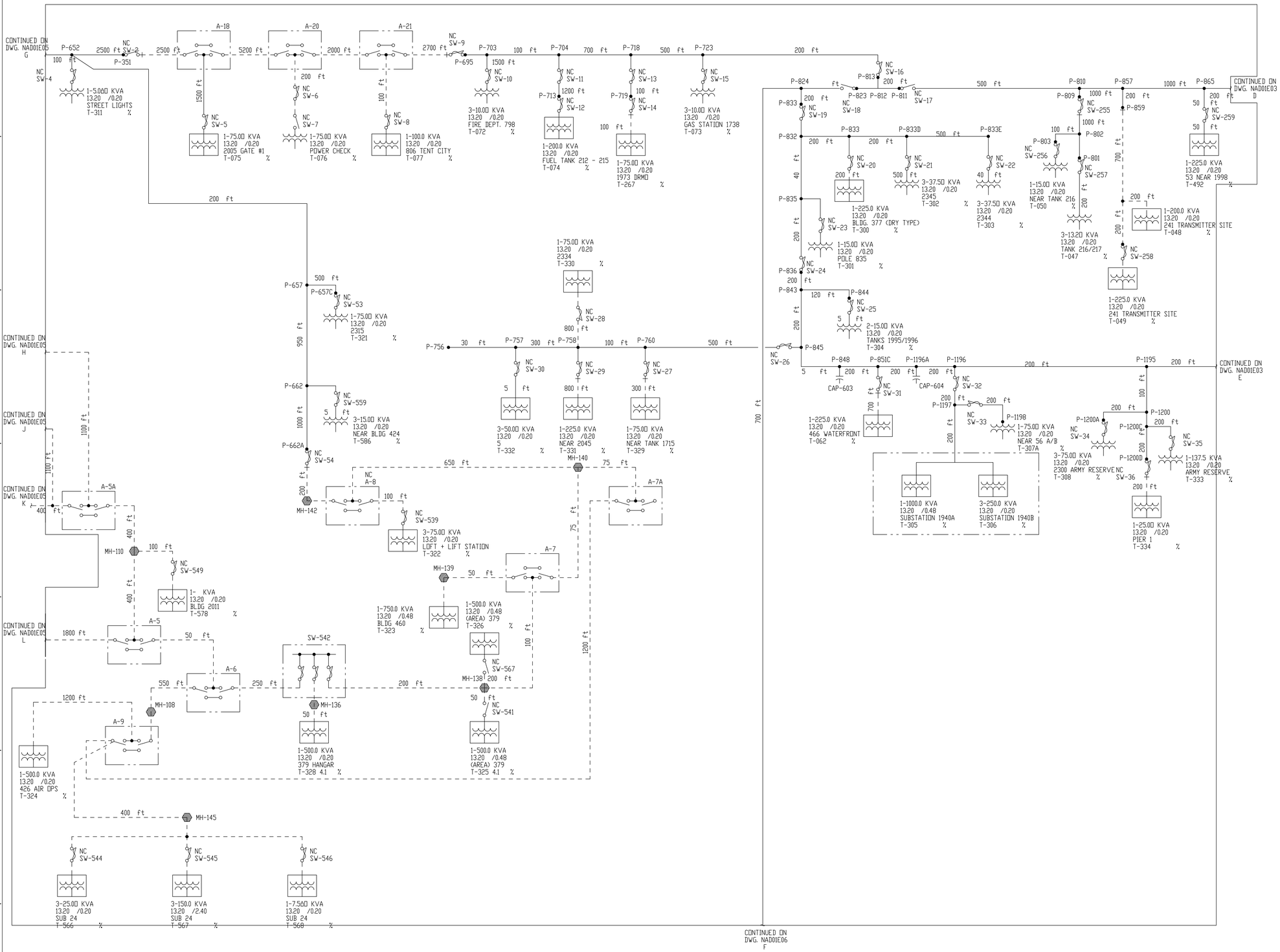

NOTES:

1. FOR 13.8KV LINES, ALL OVERHEAD CONDUCTORS ARE #2/0 HDBC AND ALL UNDERGROUND CONDUCTORS ARE #4/0 XLP, UNLESS OTHERWISE NOTED.

LEGEND:

CAPACITOR — C-600 — ID NUMBER

BREAKER — NO — VAC — NORMAL OPERATING POSITION — INTERRUPTING MEDIUM — BKR 4 — CONTINUOUS CURRENT RATING — ID NUMBER

SWITCH TEXT (TYP.): NORMAL OPERATING POSITION — AMPERE RATING

DISCONNECT SWITCH — NC SW-288

FUSED SWITCH/CUTOUT — ID NUMBER

SELECTOR SWITCH

TRANSFORMER TEXT (TYP.): KVA RATING — PRIMARY/SECONDARY VOLTAGES — 3-25.00 KVA 13.20 /0.48 BLDG. 2052 T-421 % — LOCATION — IMPEDANCE — ID NUMBER

TRANSFORMER - POLE MOUNTED

TRANSFORMER - PADMOUNTED

POLE/CONNECTION

OVERHEAD LINE

UNDERGROUND LINE

MANHOLE

NO	DATE	DESCRIPTION	DRAWN	CHECKED	DES.SUPV.	RESP.ENGR.	SUP.DISC.ENG.	CH.DISC.ENG.	PR.ENG.MGR.	MF
0	09 25 95	AS BUILT								

DRAWN BY: T. COLLINS — CHECKED BY: K. FUSSELL
DESIGN SUPV. — RESP.ENGR.: P. SCIABARRASI
SUPV.DISC.ENGR. — CH.DISC.ENGR.
PROJECT ENG.MGR.
PROJECT MGR.
IN CHARGE

PARSONS MAIN, INC.
CHARLOTTE • BOSTON • PASADENA

CLIENT/PROJECT TITLE: NAVFACENCOM ATLANTIC DIV ELECTRICAL DISTRIBUTION

DEPT. — NO.

DRAWING DESCRIPTION: ROOSEVELT ROADS, P.R. ELECTRICAL SINGLE LINE 13.2KV (SHEET 3 OF 5)

SCALE: NTS — PLOT SCALE= 1 : 12

DWG. NO.: NAD01E04 — REV.: 0

NOTICE

This drawing is issued for:
- ☐ INFORMATION/REFERENCE
- ☐ BID
- ☐ CONTRACT
- ☐ CONSTRUCTION/FABRICATION

This drawing taken with other documents show the general requirements of the work and is not complete as to scope or detail.

PROJECT/FILE: $$$DGNSPEC$$$$$$$$$$$$$$$$$$$$
DATE: $$$DATE$$$$$$$$$$$$$ NAME: ELEC/TC

P:\pr\19-Ceiba\1741.0 ROOSEVELT RD AE CONSULT\Job 16 Infrastructure Data\Electric\Drawings-Maps\CAD Drawings\System Drawings 1995\NAD01E04.DWG, 3/15/2018 1:43:37 PM, DWG To PDF.pc3

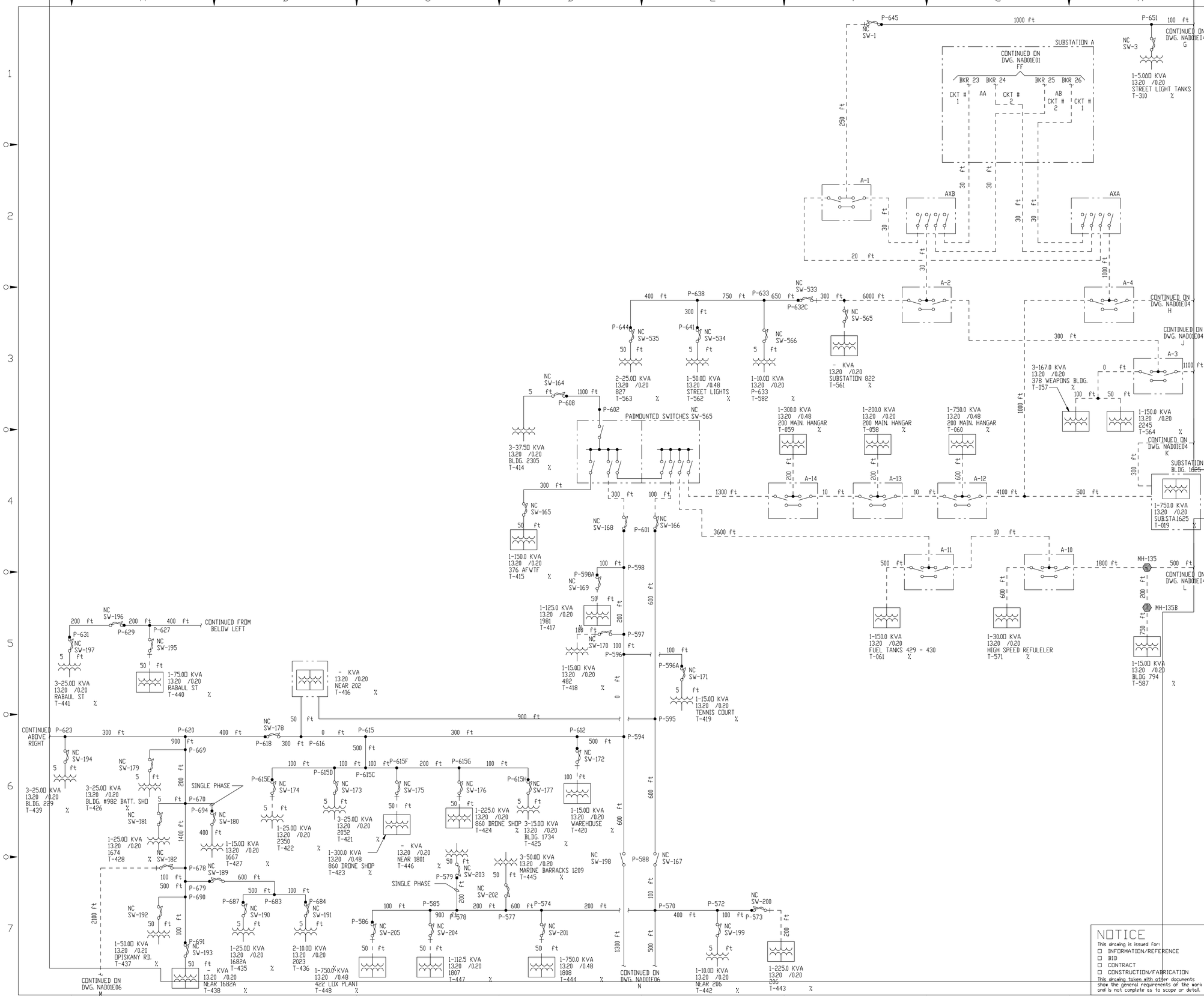

NOTES:

1. FOR 13.8KV LINES, ALL OVERHEAD CONDUCTORS ARE #2/0 HDBC AND ALL UNDERGROUND CONDUCTORS ARE #4/0 XLP, UNLESS OTHERWISE NOTED.

LEGEND:

CAPACITOR — C-600 — ID NUMBER

BREAKER — NO VAC BKR 4 — NORMAL OPERATING POSITION; INTERRUPTING MEDIUM; CONTINUOUS CURRENT RATING; ID NUMBER

SWITCH TEXT (TYP.)

DISCONNECT SWITCH — NC SW-288 — NORMAL OPERATING POSITION; AMPERE RATING

FUSED SWITCH/CUTOUT — ID NUMBER

SELECTOR SWITCH

TRANSFORMER TEXT (TYP.)

PRIMARY/SECONDARY VOLTAGES — 3-25.00 KVA 13.20 /0.48 BLDG. 2052 T-421 % — KVA RATING; LOCATION; IMPEDANCE; ID NUMBER

TRANSFORMER - POLE MOUNTED

TRANSFORMER - PADMOUNTED

POLE/CONNECTION

OVERHEAD LINE

UNDERGROUND LINE

MANHOLE

NO	DATE	DESCRIPTION
B	06 26 95	AS BUILT

DRAWN	CHECKED	DES.SUPV.	RESP.ENGR.	SUP.DISC.ENG.	CH.DISC.ENG.	PR.ENG.MGR.

DRAWN BY: T. COLLINS — CHECKED BY: K. FUSSELL
DESIGN SUPV. — RESP.ENGR.: P. SCIABARRASI
SUPV.DISC.ENGR. — CH.DISC.ENGR.
PROJECT ENG.MGR.
PROJECT MGR.
IN CHARGE

PARSONS MAIN, INC.
CHARLOTTE • BOSTON • PASADENA

CLIENT/PROJECT TITLE
NAVFACENCOM ATLANTIC DIV
ELECTRICAL DISTRIBUTION

DEPT. — NO.

DRAWING DESCRIPTION
ROOSEVELT ROADS, P.R.
ELECTRICAL SINGLE LINE
13.2KV (SHEET 4 OF 5)

SCALE — PLOT SCALE= 1 : 12

DWG. NO. NAD01E05 — REV. 0

NOTICE
This drawing is issued for:
☐ INFORMATION/REFERENCE
☐ BID
☐ CONTRACT
☐ CONSTRUCTION/FABRICATION
This drawing taken with other documents show the general requirements of the work and is not complete as to scope or detail.

PROJECT/FILE: $$$DGNSPEC$$$$$$$$$$$$$$$$$$$$
DATE: $$$DATE$$$$$$$$$$$$ NAME: ELEC/TC

ARCH HVAC I & C ELECT MECH CIVIL STRUC

P:\pr\19-Ceiba\1741.0 ROOSEVELT RD AE CONSULT\Job 16 Infrastructure Data\Electric\Drawings-Maps\CAD Drawings\System Drawings 1995\NAD01E05.DWG, 3/15/2018 1:44:17 PM, DWG To PDF.pc3

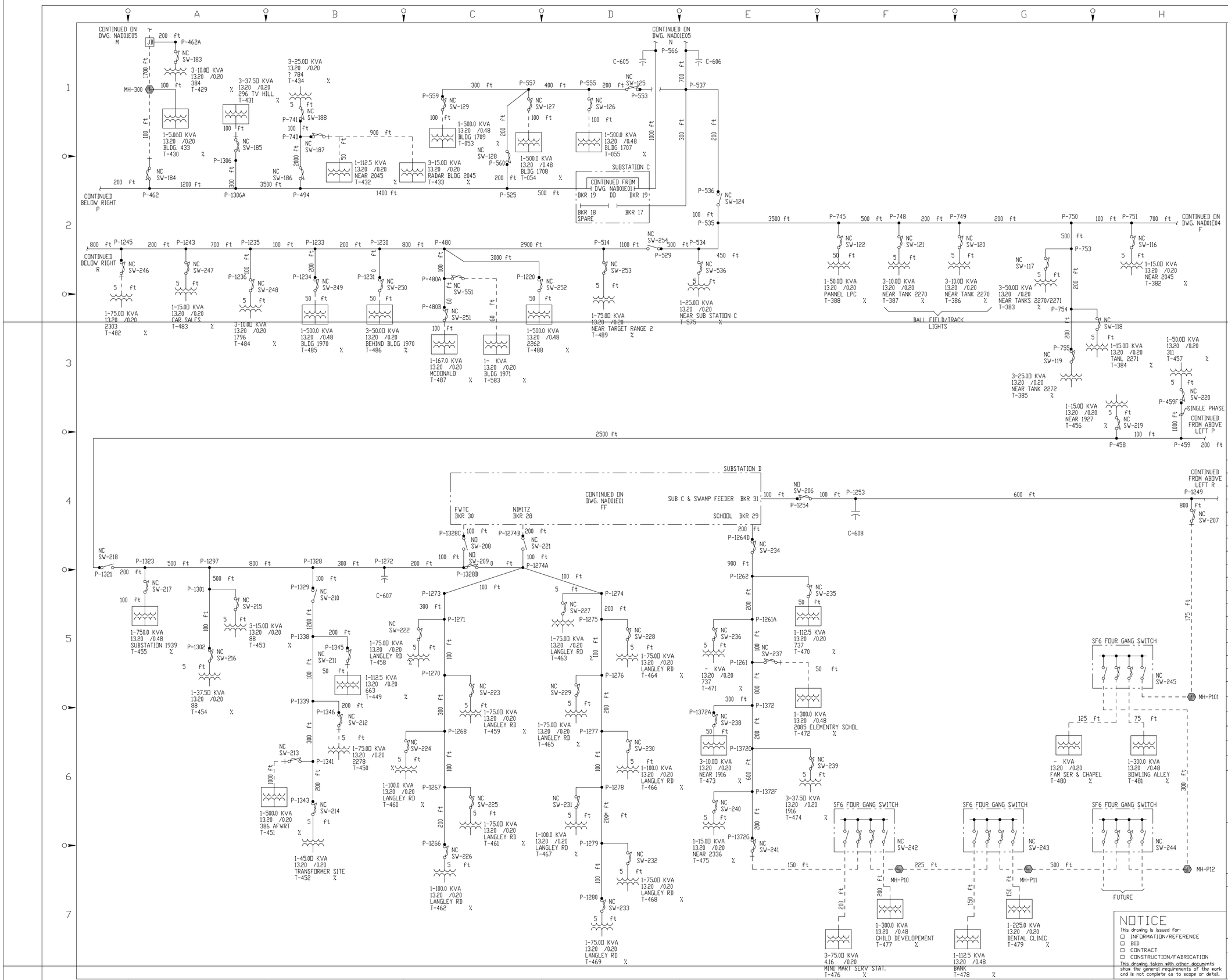

NOTES:

1. FOR 13.8KV LINES, ALL OVERHEAD CONDUCTORS ARE #2/0 HDBC AND ALL UNDERGROUND CONDUCTORS ARE #4/0 XLP, UNLESS OTHERWISE NOTED.

LEGEND:

CAPACITOR — C-600 — ID NUMBER

BREAKER — NO VAC BKR 4 — NORMAL OPERATING POSITION; INTERRUPTING MEDIUM; CONTINUOUS CURRENT RATING; ID NUMBER

SWITCH TEXT (TYP.)

DISCONNECT SWITCH — NORMAL OPERATING POSITION; AMPERE RATING

FUSED SWITCH/CUTOUT — NC SW-288 — ID NUMBER

SELECTOR SWITCH

TRANSFORMER TEXT (TYP.)

PRIMARY/SECONDARY VOLTAGES — KVA RATING — 3-25.00 KVA 13.20 /0.48 BLDG. 2052 T-421 — LOCATION — IMPEDANCE — ID NUMBER

TRANSFORMER - POLE MOUNTED

TRANSFORMER - PADMOUNTED

POLE/CONNECTION

OVERHEAD LINE

UNDERGROUND LINE

MANHOLE

NO	DATE	DESCRIPTION
0	09 25 95	AS BUILT

DRAWN	CHECKED	DES.SUPV.	RESP.ENGR.	SUP.DISC.ENG.	CH.DISC.ENG.	PR.ENG.MGR.

DRAWN BY: T. COLLINS
CHECKED BY: K. FUSSELL
DESIGN SUPV.:
RESP.ENGR.: P. SCIABARRASI
SUPV.DISC.ENGR.:
CH.DISC.ENGR.:
PROJECT ENG.MGR.:
PROJECT MGR.:
IN CHARGE:

PARSONS MAIN, INC.
CHARLOTTE • BOSTON • PASADENA

CLIENT/PROJECT TITLE
NAVFACENCOM ATLANTIC DIV
ELECTRICAL DISTRIBUTION

DEPT.
NO.

DRAWING DESCRIPTION
ROOSEVELT ROADS, P.R.
ELECTRICAL SINGLE LINE
13.2KV (SHEET 5 OF 5)

SCALE: NTS
PLOT SCALE= 1 : 12

DWG. NO.: NAD01E06
REV.: 0

NOTICE

This drawing is issued for:
- ☐ INFORMATION/REFERENCE
- ☐ BID
- ☐ CONTRACT
- ☐ CONSTRUCTION/FABRICATION

This drawing taken with other documents show the general requirements of the work and is not complete as to scope or detail.

PROJECT/FILE: $$$DGNSPEC$$$$$$$$$$$$$$$$$$$$
DATE: $$$DATE$$$$$$$$$$$$$$ NAME: ELEC/TC

ARCH | HVAC | I & C | ELECT | MECH | CIVIL | STRUC

P:\pr\19-Ceiba\1741.0 ROOSEVELT RD AE CONSULT\Job 16 Infrastructure Data\Electric\Drawings-Maps\CAD Drawings\System Drawings 1995\NAD01E06.DWG, 3/15/2018 1:45:00 PM, DWG To PDF.pc3

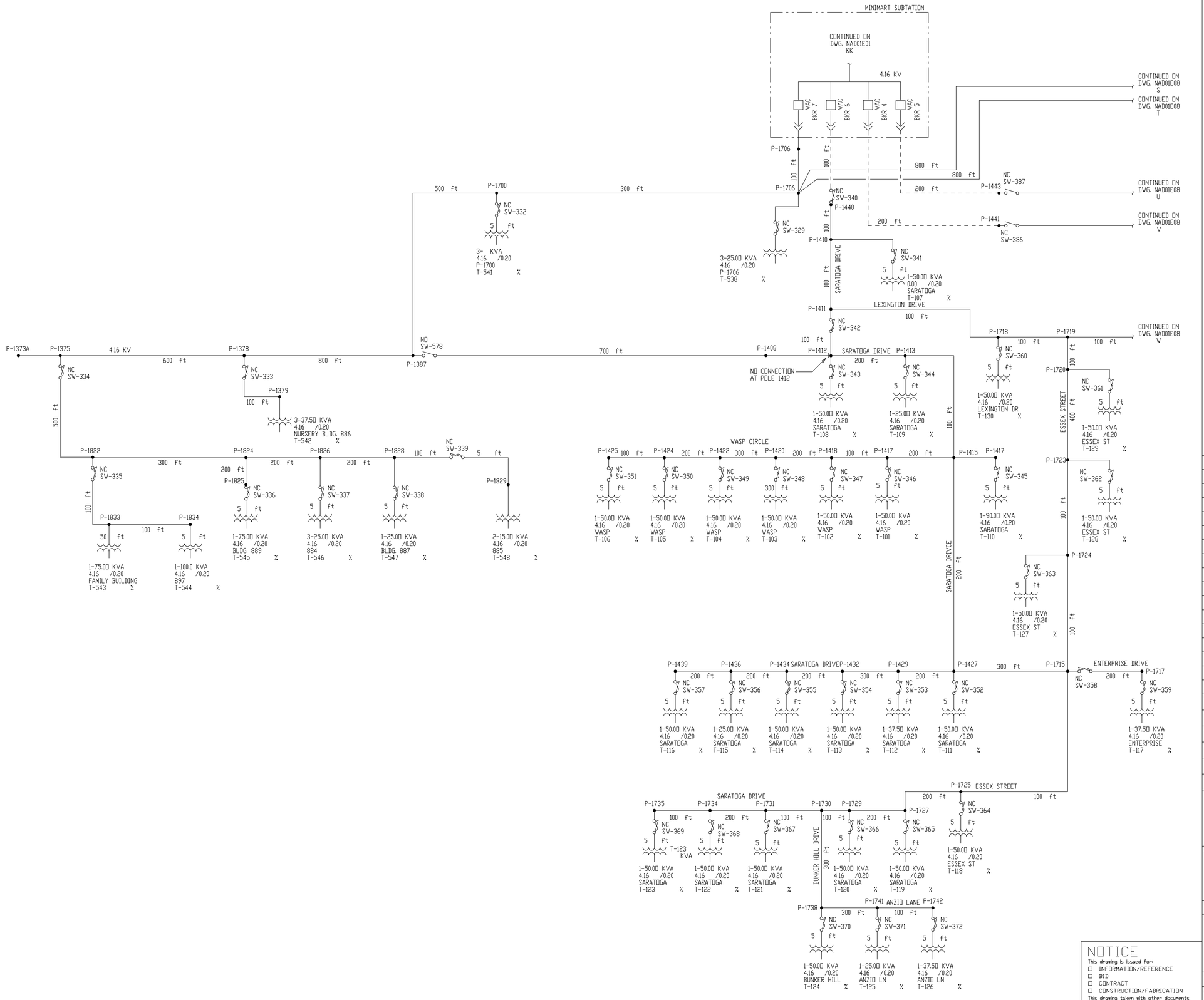

NOTES:

1. FOR 4160V LINES, ALL OVERHEAD CONDUCTORS ARE #4/0 HDBC AND ALL UNDERGROUND CONDUCTORS ARE #4/0 XLP, UNLESS OTHERWISE NOTED.

LEGEND:

CAPACITOR — C-600 — ID NUMBER

BREAKER — NO — VAC — BKR 4 — NORMAL OPERATING POSITION — INTERRUPTING MEDIUM — CONTINUOUS CURRENT RATING — ID NUMBER

SWITCH TEXT (TYP.)

DISCONNECT SWITCH — NORMAL OPERATING POSITION — AMPERE RATING — NC — SW-288

FUSED SWITCH/CUTOUT — ID NUMBER

SELECTOR SWITCH

TRANSFORMER TEXT (TYP.)

PRIMARY/SECONDARY VOLTAGES — KVA RATING — 3-25.00 KVA 13.20 /0.48 BLDG. 2052 T-421 — LOCATION — % — IMPEDANCE — ID NUMBER

TRANSFORMER - POLE MOUNTED

TRANSFORMER - PADMOUNTED

POLE/CONNECTION

OVERHEAD LINE

UNDERGROUND LINE

NO	DATE	DESCRIPTION	DRAWN	CHECKED	DES.SUPV.	RES.P.ENGR.	SUP.DISC.ENG.	CH.DISC.ENG.	PR.ENG.MGR.	MP
B	09 25 95	AS BUILT	TC	KF	KF	KF	KF			

DRAWN BY: T. COLLINS — CHECKED BY: K. FUSSELL
DESIGN SUPV. — RES.P.ENGR.: P. SCIABARRASI
SUPV.DISC.ENGR. — CH.DISC.ENGR.
PROJECT ENG.MGR.
PROJECT MGR.
IN CHARGE

PARSONS MAIN, INC.
CHARLOTTE • BOSTON • PASADENA

CLIENT/PROJECT TITLE
NAVACENCOM ATLANTIC DIV
ELECTRICAL DISTRIBUTION

DEPT. — NO.

DRAWING DESCRIPTION
ROOSEVELT ROADS, P.R.
ELECTRICAL SINGLE LINE
4.16KV (SHEET 1 OF 5)

SCALE: NTS — PLOT SCALE= 1 : 12

DWG. NO.: NAD01E07 — REV.: 0

NOTICE

This drawing is issued for:
- ☐ INFORMATION/REFERENCE
- ☐ BID
- ☐ CONTRACT
- ☐ CONSTRUCTION/FABRICATION

This drawing taken with other documents show the general requirements of the work and is not complete as to scope or detail.

PROJECT/FILE: $$$DGNSPEC$$$$$$$$$$$$$$$$$$
DATE: $$$DATE$$$$$$$$$$$$ NAME: ELEC/TC

ARCH HVAC I & C ELECT MECH CIVIL STRUC

P:\pr\19-Ceiba\1741.0 ROOSEVELT RD AE CONSULT\Job 16 Infrastructure Data\Electric\Drawings-Maps\CAD Drawings\System Drawings 1995\NAD01E07.DWG, 3/15/2018 1:45:20 PM, DWG To PDF.pc3

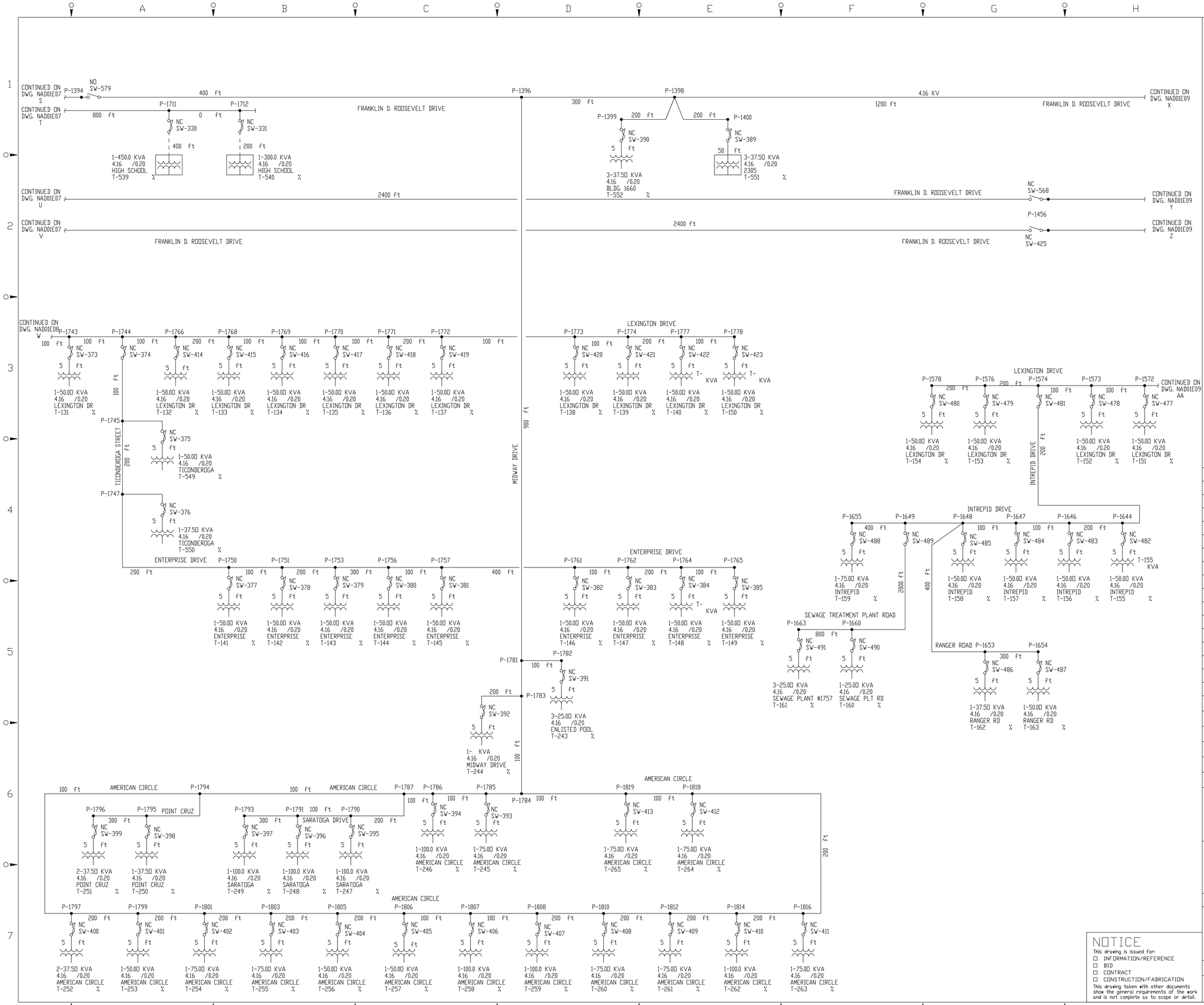

NOTES:

1. FOR 4160V LINES, ALL OVERHEAD CONDUCTORS ARE #4/0 HDBC AND ALL UNDERGROUND CONDUCTORS ARE #4/0 XLP, UNLESS OTHERWISE NOTED.

LEGEND:

CAPACITOR — C-600 — ID NUMBER

BREAKER — NO BKR 4 — VAC — NORMAL OPERATING POSITION — INTERRUPTING MEDIUM — CONTINUOUS CURRENT RATING — ID NUMBER

SWITCH TEXT (TYP.)

DISCONNECT SWITCH — NC SW-288 — NORMAL OPERATING POSITION — AMPERE RATING

FUSED SWITCH/CUTOUT — ID NUMBER

SELECTOR SWITCH

TRANSFORMER TEXT (TYP.)

PRIMARY/SECONDARY VOLTAGES — 3-25.00 KVA — KVA RATING — 13.20 /0.48 — BLDG. 2052 — T-421 — LOCATION — % — IMPEDANCE — ID NUMBER

TRANSFORMER - POLE MOUNTED

TRANSFORMER - PADMOUNTED

POLE/CONNECTION

OVERHEAD LINE

UNDERGROUND LINE

NO	DATE	DESCRIPTION
0	09 25 95	AS BUILT

DRAWN	CHECKED	DES.SUPV.	RESP.ENGR.	SUP.DISC.ENG.	CH.DISC.ENG.	PR.ENG.MGR.
TC		KF	KF	KF		

DRAWN BY: T. COLLINS
CHECKED BY: K. FUSSELL
DESIGN SUPV.
RESP.ENGR.: P. SCIABARRASI
SUPV.DISC.ENGR.
CH.DISC.ENGR.
PROJECT ENG.MGR.
PROJECT MGR.
IN CHARGE

PARSONS MAIN, INC.
CHARLOTTE • BOSTON • PASADENA

CLIENT/PROJECT TITLE
NAVFACENCOM ATLANTIC DIV
ELECTRICAL DISTRIBUTION

DEPT.
NO.

DRAWING DESCRIPTION
ROOSEVELT ROADS, P.R.
ELECTRICAL SINGLE LINE
4.16KV (SHEET 2 OF 5)

SCALE: NTS
PLOT SCALE= 1 : 12

DWG. NO.: NAD01E08
REV.: 0

NOTICE

This drawing is issued for:
- ☐ INFORMATION/REFERENCE
- ☐ BID
- ☐ CONTRACT
- ☐ CONSTRUCTION/FABRICATION

This drawing taken with other documents show the general requirements of the work and is not complete as to scope or detail.

PROJECT/FILE: $$$$DGNSPEC$$$$$$$$$$$$$$$$$$
DATE: $$$$DATE$$$$$$$$$$$$ NAME: ELEC/TC

ARCH HVAC I & C ELECT MECH CIVIL STRUC

P:\pr\19-Ceiba\1741.0 ROOSEVELT RD AE CONSULT\Job 16 Infrastructure Data\Electric\Drawings-Maps\CAD Drawings\System Drawings 1995\NAD01E08.DWG, 3/15/2018 1:46:04 PM, DWG To PDF.pc3

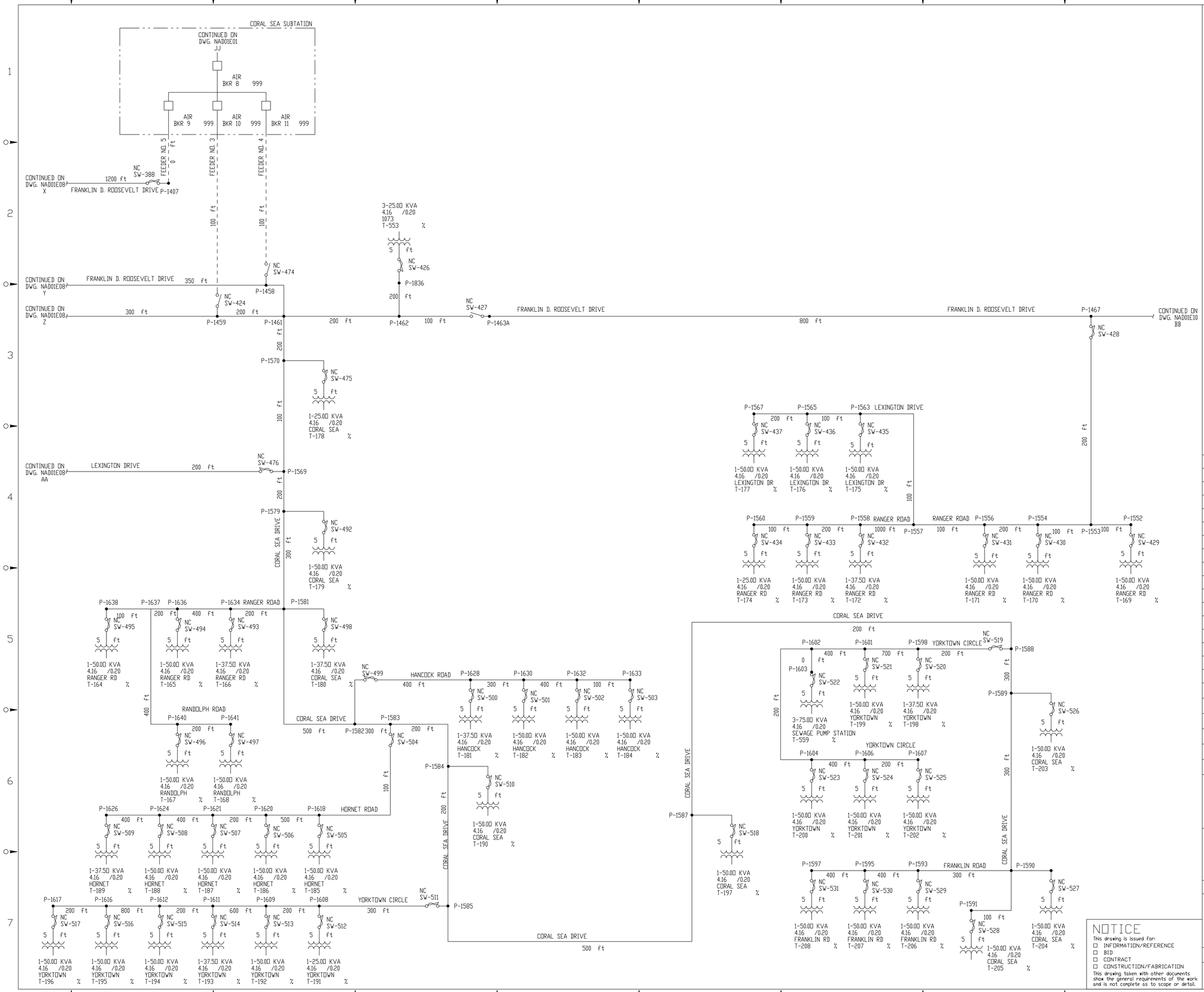

NOTES:

1. FOR 4160V LINES, ALL OVERHEAD CONDUCTORS ARE #4/0 HDBC AND ALL UNDERGROUND CONDUCTORS ARE #4/0 XLP, UNLESS OTHERWISE NOTED.

LEGEND:

CAPACITOR — C-600 — ID NUMBER

BREAKER — NO BKR 4 — NORMAL OPERATING POSITION — VAC — INTERRUPTING MEDIUM — CONTINUOUS CURRENT RATING — ID NUMBER

SWITCH TEXT (TYP.)

DISCONNECT SWITCH — NC SW-288 — NORMAL OPERATING POSITION — AMPERE RATING

FUSED SWITCH/CUTOUT — ID NUMBER

SELECTOR SWITCH

TRANSFORMER TEXT (TYP.)

PRIMARY/SECONDARY VOLTAGES — 3-25.00 KVA 13.20 /0.48 BLDG. 2052 T-421 — KVA RATING — LOCATION — ID NUMBER — IMPEDANCE ---%

TRANSFORMER - POLE MOUNTED

TRANSFORMER - PADMOUNTED

POLE/CONNECTION

OVERHEAD LINE

UNDERGROUND LINE

NO	DATE	DESCRIPTION
0	06 25 95	AS BUILT

DRAWN BY: T. COLLINS — CHECKED BY: K. FUSSELL
DESIGN SUPV. — RESP.ENGR.: P. SCIABARRASI
SUPV.DISC.ENGR. — CH.DISC.ENGR.
PROJECT ENG.MGR.
PROJECT MGR.
IN CHARGE

DRAWN / CHECKED / DES.SUPV. / RESP.ENGR. / SUP.DISC.ENG. / CH.DISC.ENG. / PR.ENG.MGR. / MF

PARSONS MAIN, INC.
CHARLOTTE • BOSTON • PASADENA

CLIENT/PROJECT TITLE
NAVFACENCOM ATLANTIC DIV
ELECTRICAL DISTRIBUTION

DEPT. — NO.

DRAWING DESCRIPTION
ROOSEVELT ROADS, P.R.
ELECTRICAL SINGLE LINE
4.16KV SHEET 3 OF 5)

SCALE: NTS — PLOT SCALE= 1 : 12

DWG. NO. NAD01E09 — REV. 0

NOTICE

This drawing is issued for:
- ☐ INFORMATION/REFERENCE
- ☐ BID
- ☐ CONTRACT
- ☐ CONSTRUCTION/FABRICATION

This drawing taken with other documents show the general requirements of the work and is not complete as to scope or detail.

PROJECT/FILE: $$$DGNSPEC$$$$$$$$$$$$$$$$$$$$
DATE: $$$DATE$$$$$$$$$$$$ NAME: ELEC/TC

ARCH | HVAC | I & C | ELECT | MECH | CIVIL | STRUC

P:\pr\19-Ceiba\17410 ROOSEVELT RD AE CONSULT\Job 16 Infrastructure Data\Electric\Drawings-Maps\CAD Drawings\System Drawings 1995\NAD01E09.DWG, 3/15/2018 1:46:37 PM, DWG To PDF.pc3

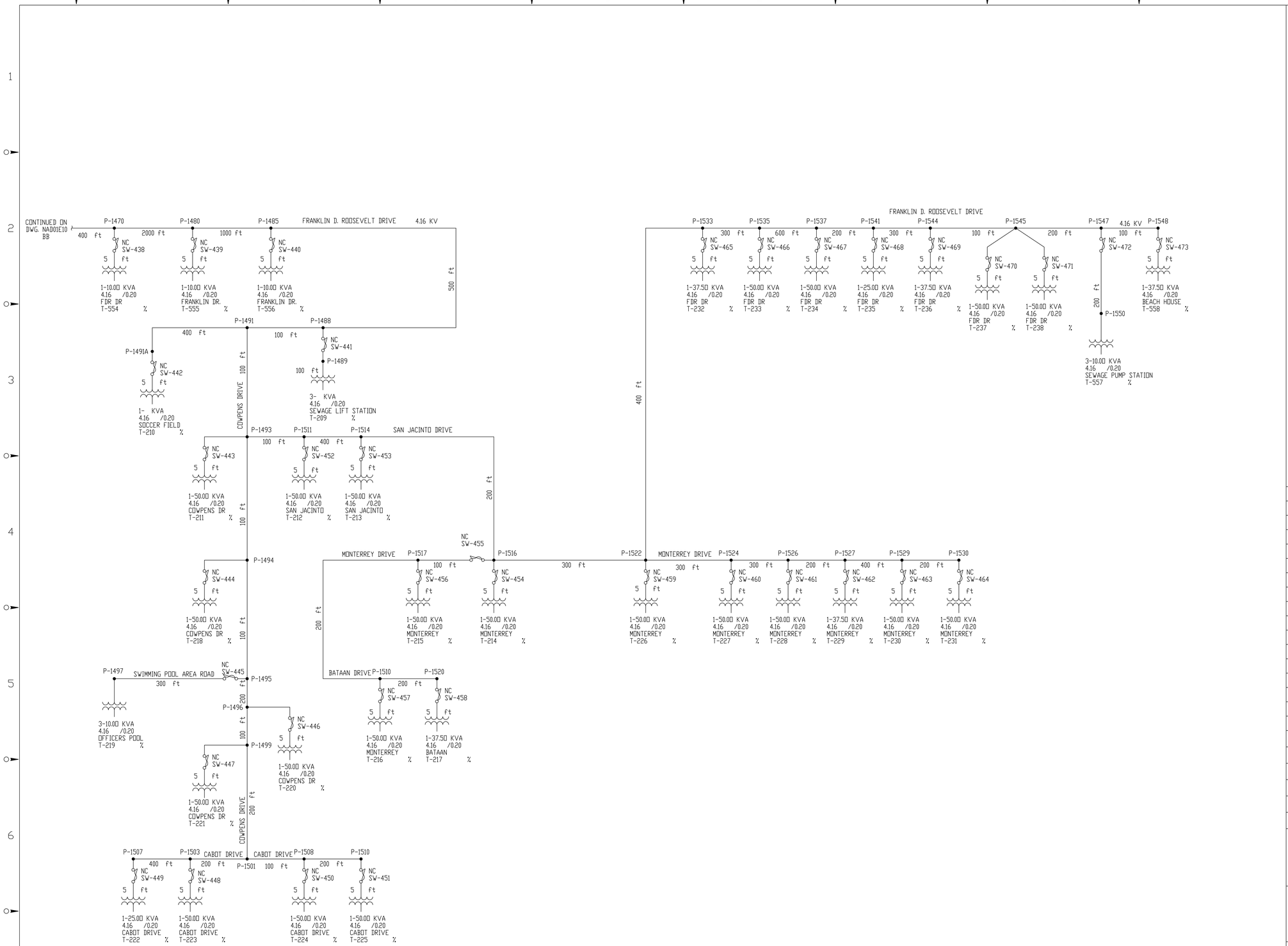

NOTES:

1. FOR 4160V LINES, ALL OVERHEAD CONDUCTORS ARE #4/0 HDBC AND ALL UNDERGROUND CONDUCTORS ARE #4/0 XLP, UNLESS OTHERWISE NOTED.

LEGEND:

CAPACITOR — C-600 — ID NUMBER

BREAKER — NO VAC — BKR 4 — NORMAL OPERATING POSITION — INTERRUPTING MEDIUM — CONTINUOUS CURRENT RATING — ID NUMBER

SWITCH TEXT (TYP.)

DISCONNECT SWITCH — NORMAL OPERATING POSITION — AMPERE RATING — NC SW-288

FUSED SWITCH/CUTOUT — ID NUMBER

SELECTOR SWITCH

TRANSFORMER TEXT (TYP.)

PRIMARY/SECONDARY VOLTAGES — KVA RATING — 3-25.00 KVA 13.20 /0.48 BLDG. 2052 T-421 — LOCATION — ---% — IMPEDANCE — ID NUMBER

TRANSFORMER - POLE MOUNTED

TRANSFORMER - PADMOUNTED

POLE/CONNECTION

OVERHEAD LINE

UNDERGROUND LINE

NO	DATE	DESCRIPTION						
0	09 25 95	AS BUILT						

DRAWN BY T. COLLINS	CHECKED BY K. FUSSELL
DESIGN SUPV.	RESP.ENGR. P. SCIABARRASI
SUPV.DISC.ENGR.	CH.DISC.ENGR.
PROJECT ENG.MGR.	
PROJECT MGR.	
IN CHARGE	

DRAWN / CHECKED / DES.SUPV. / RESP.ENGR. / SUP.DISC.ENG. / CH.DISC.ENG. / PR.ENG.MGR. / MP

PARSONS MAIN, INC.

CHARLOTTE • BOSTON • PASADENA

CLIENT/PROJECT TITLE

NAVFACENCOM ATLANTIC DIV
ELECTRICAL DISTRIBUTION

DEPT. | NO.

DRAWING DESCRIPTION

ROOSEVELT ROADS, P.R.
ELECTRICAL SINGLE LINE
4.16KV (SHEET 4 OF 5)

SCALE NTS — PLOT SCALE= 1 : 12

DWG. NO. NAD01E10 — REV. 0

NOTICE

This drawing is issued for:

- ☐ INFORMATION/REFERENCE
- ☐ BID
- ☐ CONTRACT
- ☐ CONSTRUCTION/FABRICATION

This drawing taken with other documents show the general requirements of the work and is not complete as to scope or detail.

PROJECT/FILE: $$$DGNSPEC$$$$$$$$$$$$$$$$$$$$
DATE: $$$DATE$$$$$$$$$$$$ NAME: ELEC/TC

ARCH HVAC I & C ELECT MECH CIVIL STRUC

P:\pr\19-Ceiba\1741.0 ROOSEVELT RD AE CONSULT\Job 16 Infrastructure Data\Electric\Drawings-Maps\CAD Drawings\System Drawings 1995\NAD01E10.DWG, 3/15/2018 1:47:09 PM, DWG To PDF.pc3

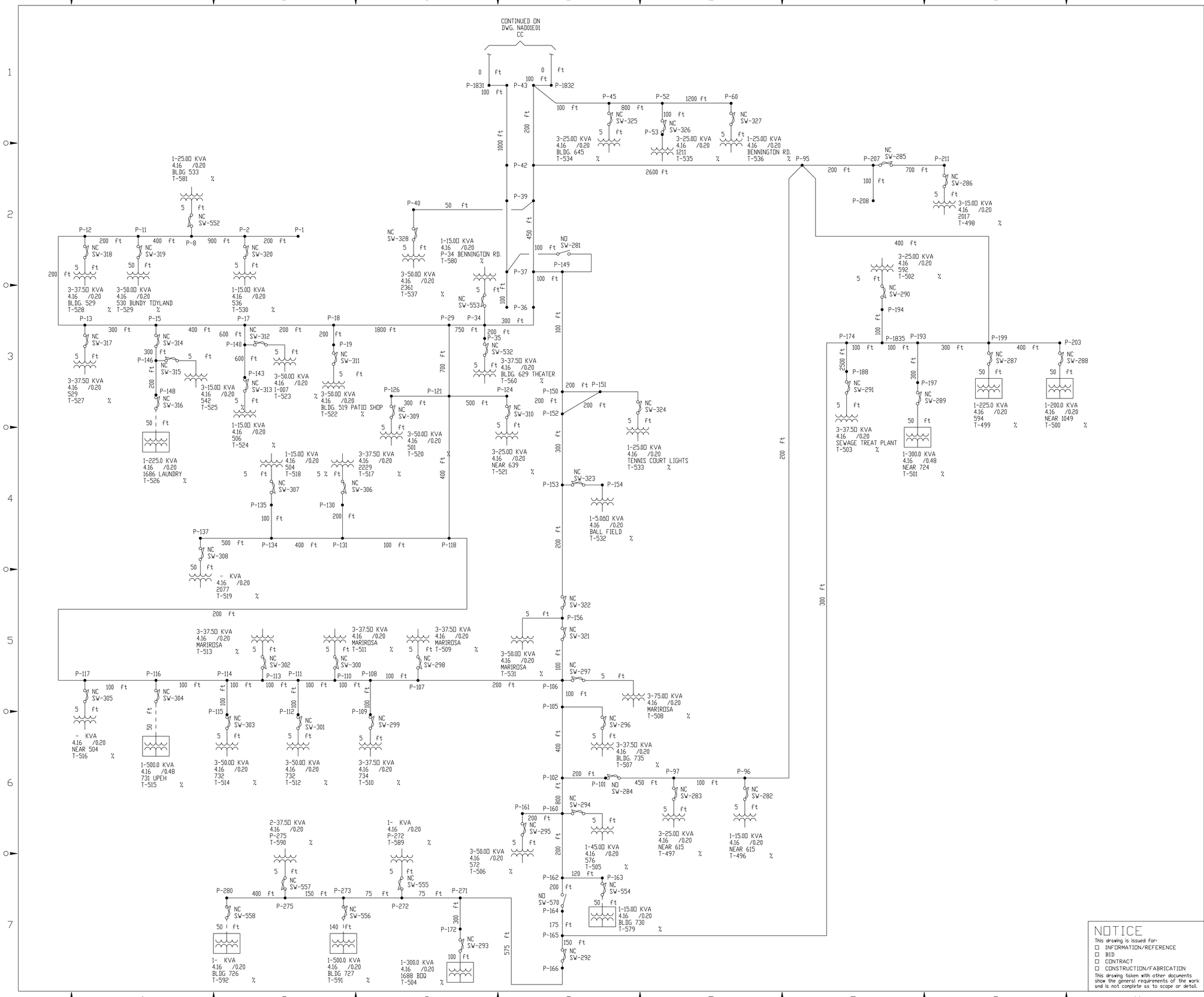

NOTES:

1. FOR 4160V LINES, ALL OVERHEAD CONDUCTORS ARE #4/0 HDBC AND ALL UNDERGROUND CONDUCTORS ARE #4/0 XLP, UNLESS OTHERWISE NOTED.

LEGEND:

CAPACITOR — C-600 — ID NUMBER

BREAKER — NO VAC BKR 4 — NORMAL OPERATING POSITION — INTERRUPTING MEDIUM — CONTINUOUS CURRENT RATING — ID NUMBER

SWITCH TEXT (TYP.)

DISCONNECT SWITCH — NC SW-288 — NORMAL OPERATING POSITION — AMPERE RATING

FUSED SWITCH/CUTOUT — ID NUMBER

SELECTOR SWITCH

TRANSFORMER TEXT (TYP.)

PRIMARY/SECONDARY VOLTAGES — 3-25.00 KVA 13.20 /0.48 BLDG. 2052 T-421 — KVA RATING — LOCATION — IMPEDANCE — ID NUMBER

TRANSFORMER - POLE MOUNTED

TRANSFORMER - PADMOUNTED

POLE/CONNECTION

OVERHEAD LINE

UNDERGROUND LINE

NO	DATE	DESCRIPTION				
0	09 25 95	AS BUILT	TC	KS	KS	

DRAWN BY T. COLLINS	CHECKED BY K. FUSSELL
DESIGN SUPV.	RESP.ENGR. P. SCIABARRASI
SUPV.DISC.ENGR.	CH.DISC.ENGR.
PROJECT ENG.MGR.	
PROJECT MGR.	
IN CHARGE	

DRAWN / CHECKED / DES.SUPV. / RESP.ENGR. / SUP.DISC.ENG. / CH.DISC.ENG. / PR.ENG.MGR. / MP

PARSONS MAIN, INC.
CHARLOTTE • BOSTON • PASADENA

CLIENT/PROJECT TITLE
NAVFACENCOM ATLANTIC DIV
ELECTRICAL DISTRIBUTION

DEPT. | NO.

DRAWING DESCRIPTION
ROOSEVELT ROADS, P.R.
ELECTRICAL SINGLE LINE
4.16KV (SHEET 5 OF 5)

SCALE NTS | PLOT SCALE= 1 : 12

DWG. NO. NAD01E11 | REV. 0

NOTICE
This drawing is issued for:
- ☐ INFORMATION/REFERENCE
- ☐ BID
- ☐ CONTRACT
- ☐ CONSTRUCTION/FABRICATION

This drawing taken with other documents show the general requirements of the work and is not complete as to scope or detail.

PROJECT/FILE: $$$DGNSPEC$$$$$$$$$$$$$$$$$$
DATE: $$$DATE$$$$$$$$$$$$ NAME: ELEC/TC

ARCH | HVAC | I & C | ELECT | MECH | CIVIL | STRUC

P:\pr\19-Ceiba\1741.0 ROOSEVELT RD AE CONSULT\Job 16 Infrastructure Data\Electric\Drawings-Maps\CAD Drawings\System Drawings 1995\NAD01E11.DWG, 3/15/2018 1:47:35 PM, DWG To PDF.pc3