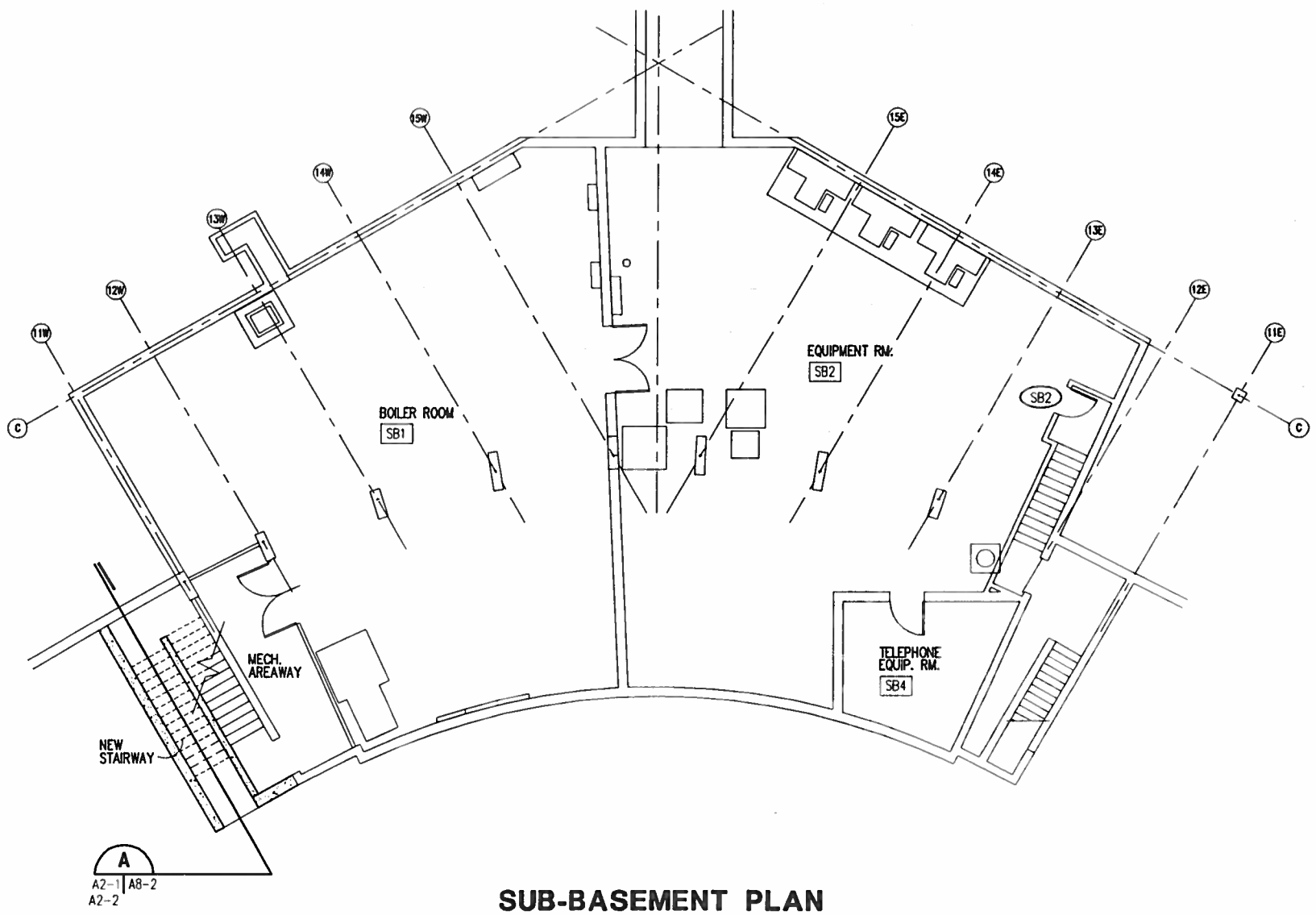

SUB-BASEMENT PLAN

SCALE: 1/8" = 1'-0"

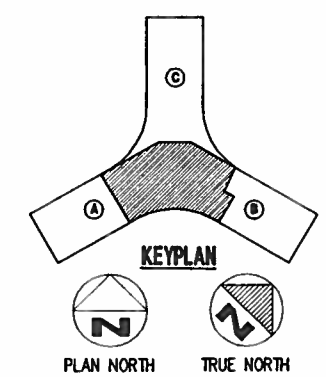

0 5 10 15 20

GRAPHIC SCALE
1/8" = 1'-0"

SHERLOCK, SMITH & ADAMS, INC.
ARCHITECTS - ENGINEERS
MONTGOMERY, ALABAMA

U.S. NAVAL STATION ROOSEVELT ROADS, P.R.
REPAIRS TO NAVAL HOSPITAL
FLOOR PLAN - SUB-BASEMENT

CONSTR. CONTR. NO. | SPECIFICATION NO. | NAVFAC DRWG. NO. | TF NO.
SHEET ? OF ??

SEAL AREA

ENG. DIV. DIR.: _____ DATE: _____
SATISFACTORY TO: _____ DATE: _____
DESIGN BY: RAS DRAWN BY: FLT
CHK BY: RAS APPROVED:

DATE	REVISION DESCRIPTION

DEPARTMENT OF THE NAVY
NAVAL FACILITIES ENGINEERING COMMAND
NAVY PUBLIC WORKS CENTER, JACKSONVILLE, FL
U.S. NAVAL STATION ROOSEVELT ROADS, P.R.
REPAIRS TO NAVAL HOSPITAL
FLOOR PLAN - SUB-BASEMENT

CONSTR. CONTR. NO. | NAVFAC DWG. NO. | PWC DWG. NO.

PLATE NO.
A2-1

DWG. #

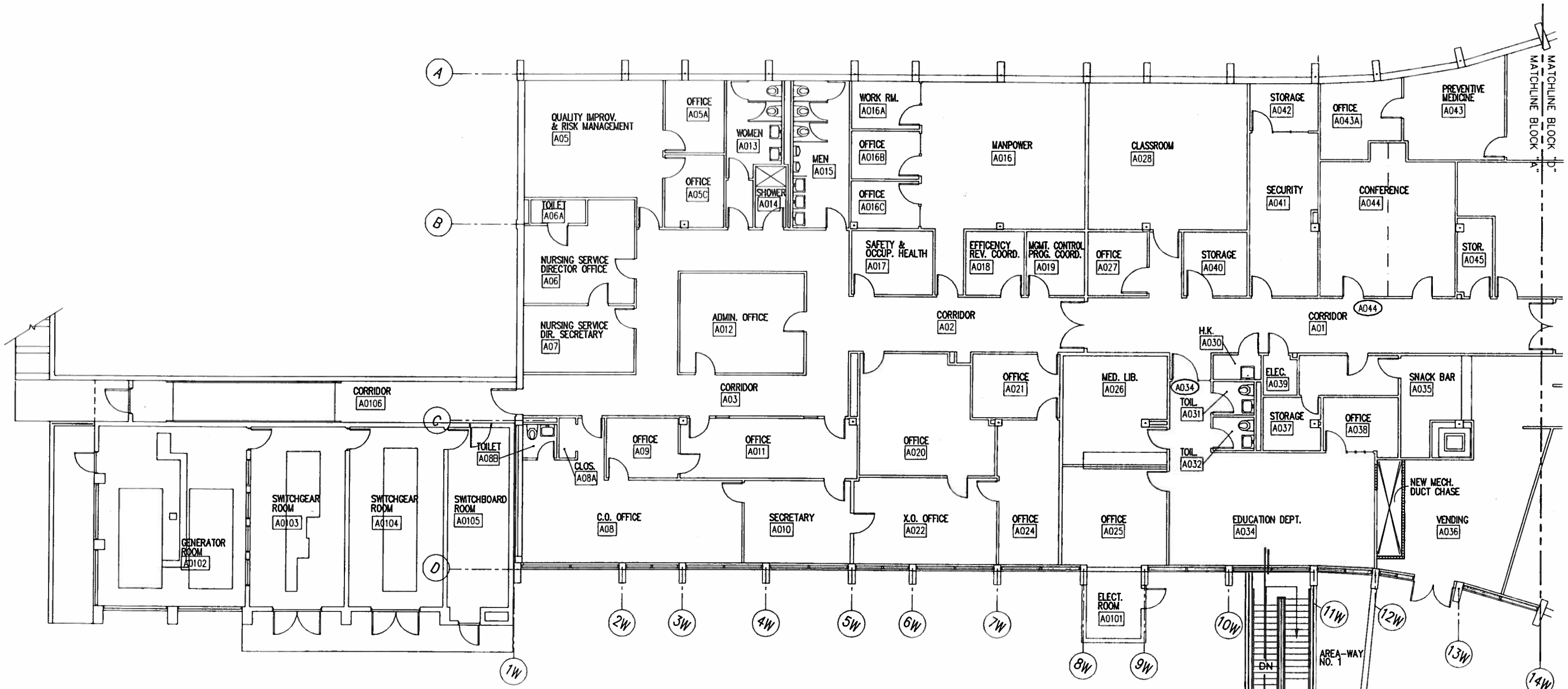

BASEMENT PLAN - BLOCK A

SCALE: 1/8" = 1'-0"

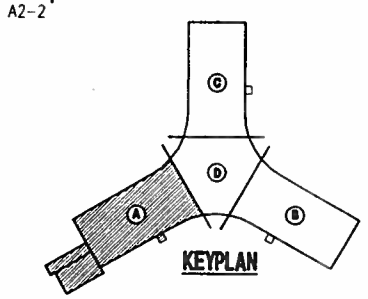

KEYPLAN

PLAN NORTH

TRUE NORTH

GRAPHIC SCALE
0 5 10 15 20
1/8" = 1'-0"

SHERLOCK, SMITH & ADAMS, INC.
ARCHITECTS - ENGINEERS
MONTGOMERY, ALABAMA

U.S. NAVAL STATION ROOSEVELT ROADS, P.R.
REPAIRS TO NAVAL HOSPITAL
FLOOR PLAN - BASEMENT BLOCK A

CONSTR. CONTR. NO. | SPECIFICATION NO. | NAVFAC DRWG NO. | TF NO.
SHEET ? OF ??

SEAL AREA

ENG. DIV. DIR.: DATE:
SATISFACTORY TO: DATE:
DESIGN BY: RAS DRAWN BY: FLT

REVISION DESCRIPTION | DATE

NAVAL FACILITIES ENGINEERING COMMAND
DEPARTMENT OF THE NAVY
NAVY PUBLIC WORKS CENTER, JACKSONVILLE, FL
U.S. NAVAL STATION ROOSEVELT ROADS, P.R.
REPAIRS TO NAVAL HOSPITAL
FLOOR PLAN - BASEMENT BLOCK A

CONSTR. CONTR. NO | NAVFAC DWG. NO. | PWC DWG. NO

PLATE NO.
A2-2

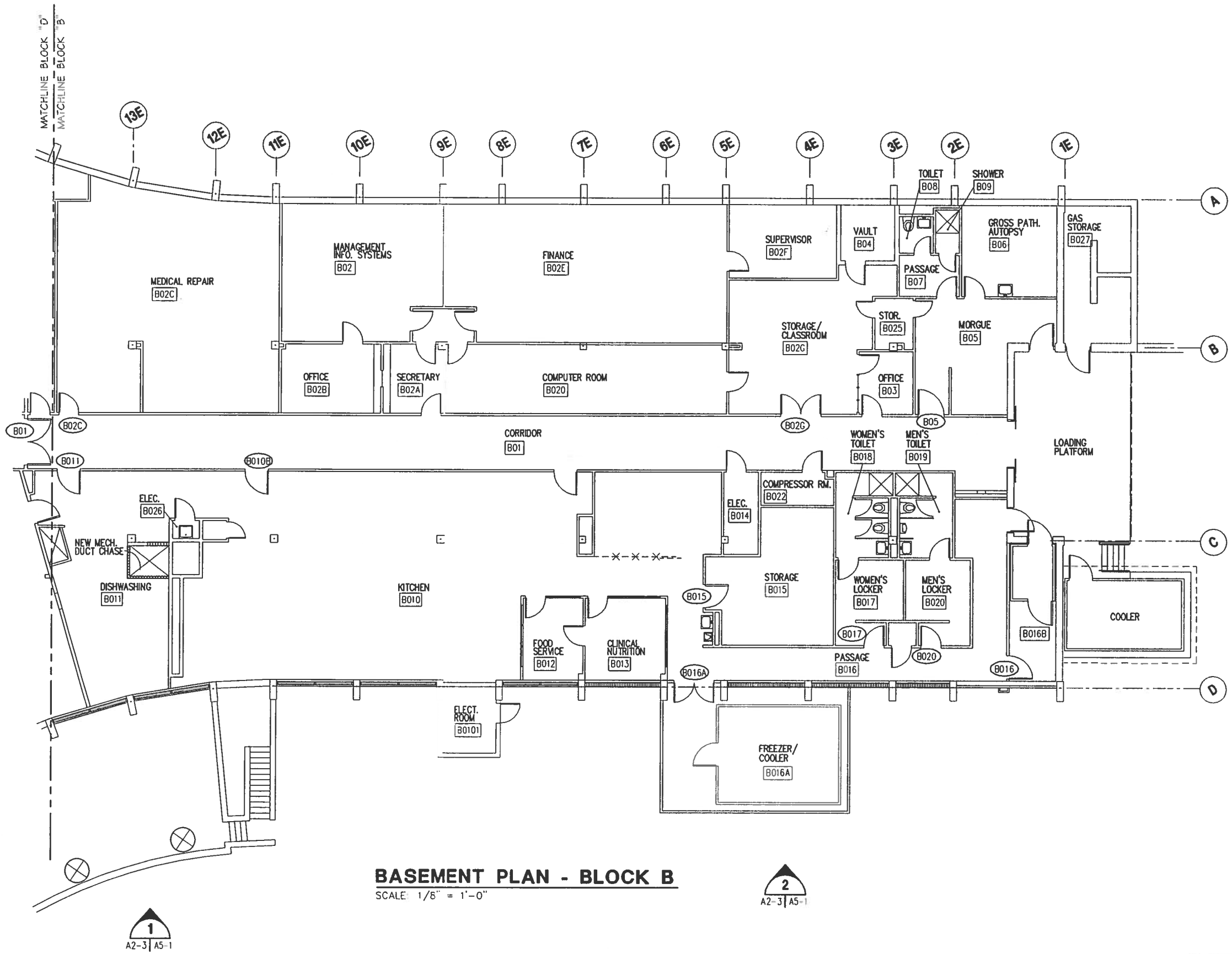

BASEMENT PLAN - BLOCK B

SCALE: 1/8" = 1'-0"

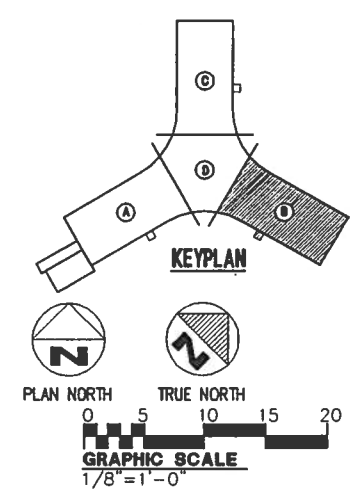

SHERLOCK, SMITH & ADAMS, INC.
ARCHITECTS - ENGINEERS
MONTGOMERY, ALABAMA

U.S. NAVAL STATION ROOSEVELT ROADS, P.R.
REPAIRS TO NAVAL HOSPITAL
FLOOR PLAN - BASEMENT BLOCK B

CONSTR. CONTR. NO. | SPECIFICATION NO. | NAVFAC DRWG. NO. | TF NO. | SHEET ? OF ??

SEAL AREA

ENG. DIV. DIR.: DATE:
SATISFACTORY TO: DATE:
DESIGN BY: RAS DRAWN BY: FLT
CHK BY: RAS APPROVED:

REVISION DESCRIPTION | DATE

DEPARTMENT OF THE NAVY
NAVAL FACILITIES ENGINEERING COMMAND
NAVY PUBLIC WORKS CENTER, JACKSONVILLE, FL
U.S. NAVAL STATION ROOSEVELT ROADS, P.R.
REPAIRS TO NAVAL HOSPITAL
FLOOR PLAN - BASEMENT BLOCK B

PWC DWG. NO | NAVFAC DWG. NO | CONSTR. CONTR. NO

PLATE NO.
A2-3

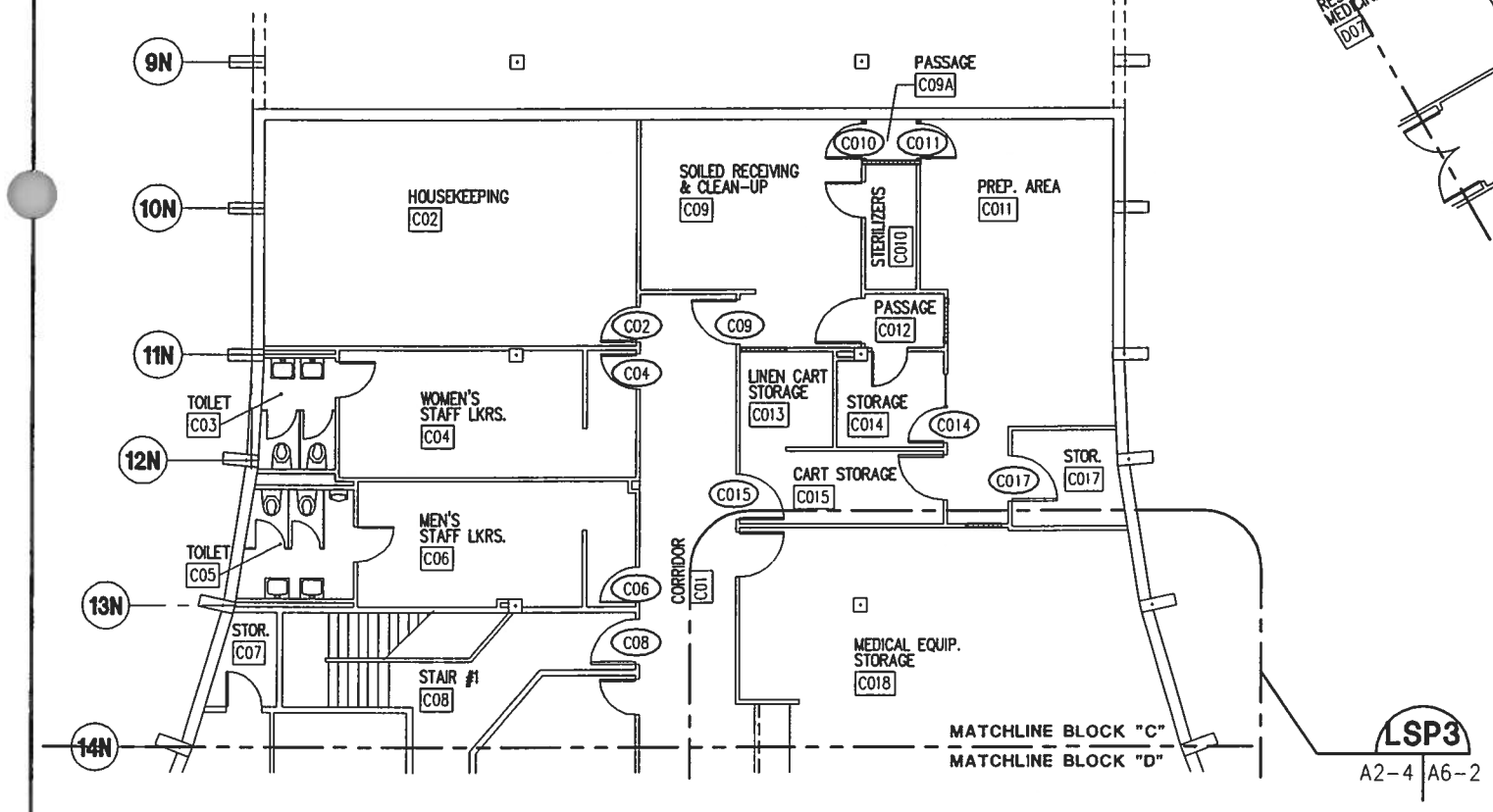

BASEMENT PLAN - BLOCK C

SCALE: 1/8" = 1'-0"

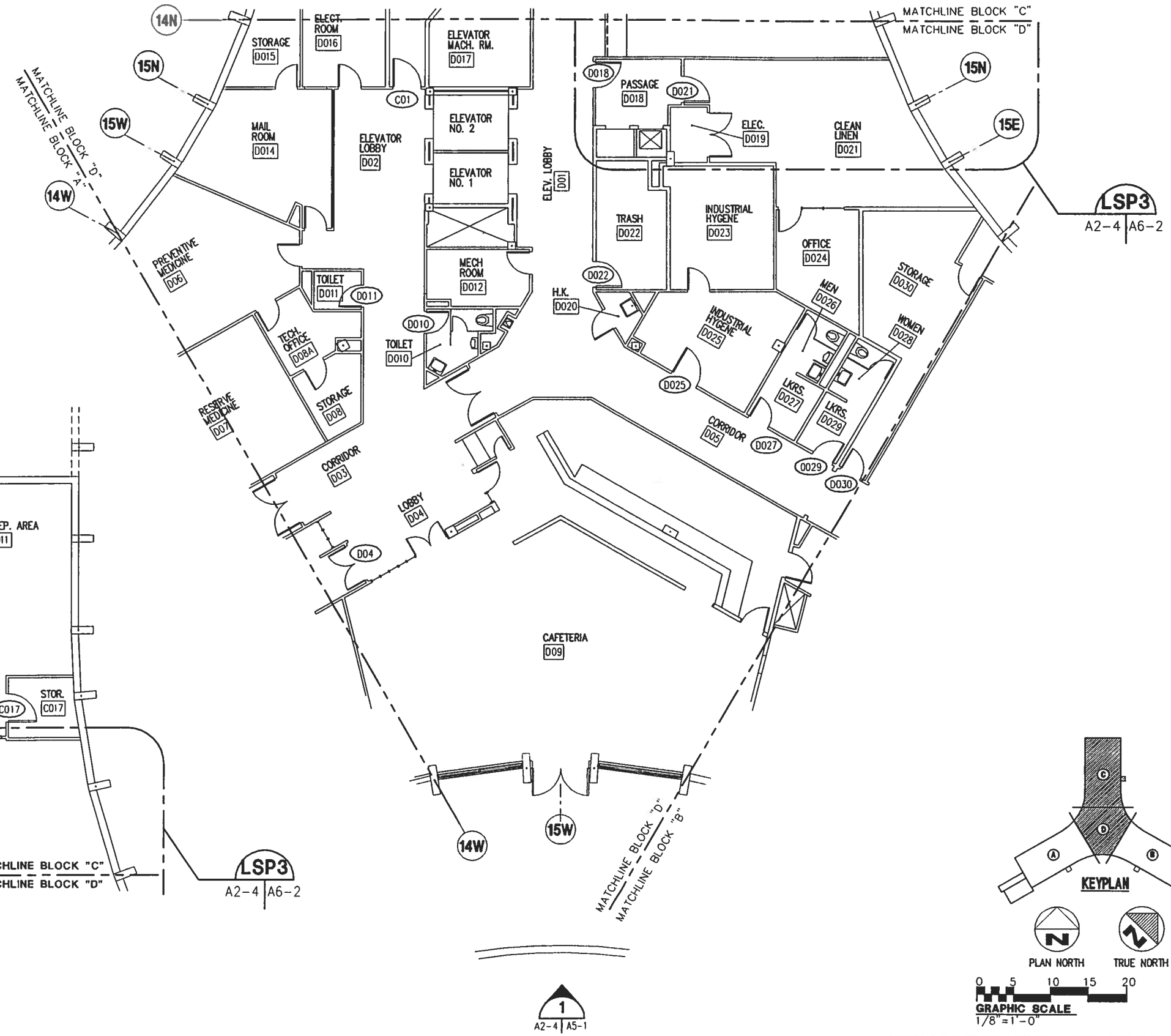

BASEMENT PLAN - BLOCK D

SCALE: 1/8" = 1'-0"

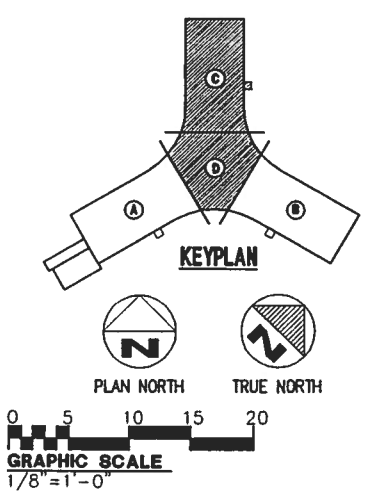

SHERLOCK, SMITH & ADAMS, INC.
ARCHITECTS - ENGINEERS
MONTGOMERY, ALABAMA

U.S. NAVAL STATION ROOSEVELT ROADS, P.R.
REPAIRS TO NAVAL HOSPITAL
FLOOR PLAN - BASEMENT BLOCKS C & D

CONSTR. CONTR. NO. | SPECIFICATION NO. | NAVFAC DRWG. NO. | TF NO.
SHEET ? OF ??

SEAL AREA

DIV. DIV. DIR.: DATE:
SATISFACTORY TO: DATE:
DESIGN BY: RAS DRAWN BY: FLT

REVISION DESCRIPTION | DATE

NAVAL FACILITIES ENGINEERING COMMAND
DEPARTMENT OF THE NAVY
NAVY PUBLIC WORKS CENTER, JACKSONVILLE, FL
U.S. NAVAL STATION ROOSEVELT ROADS, P.R.
REPAIRS TO NAVAL HOSPITAL
FLOOR PLAN - BASEMENT BLOCKS C & D

PLATE NO.
A2-4

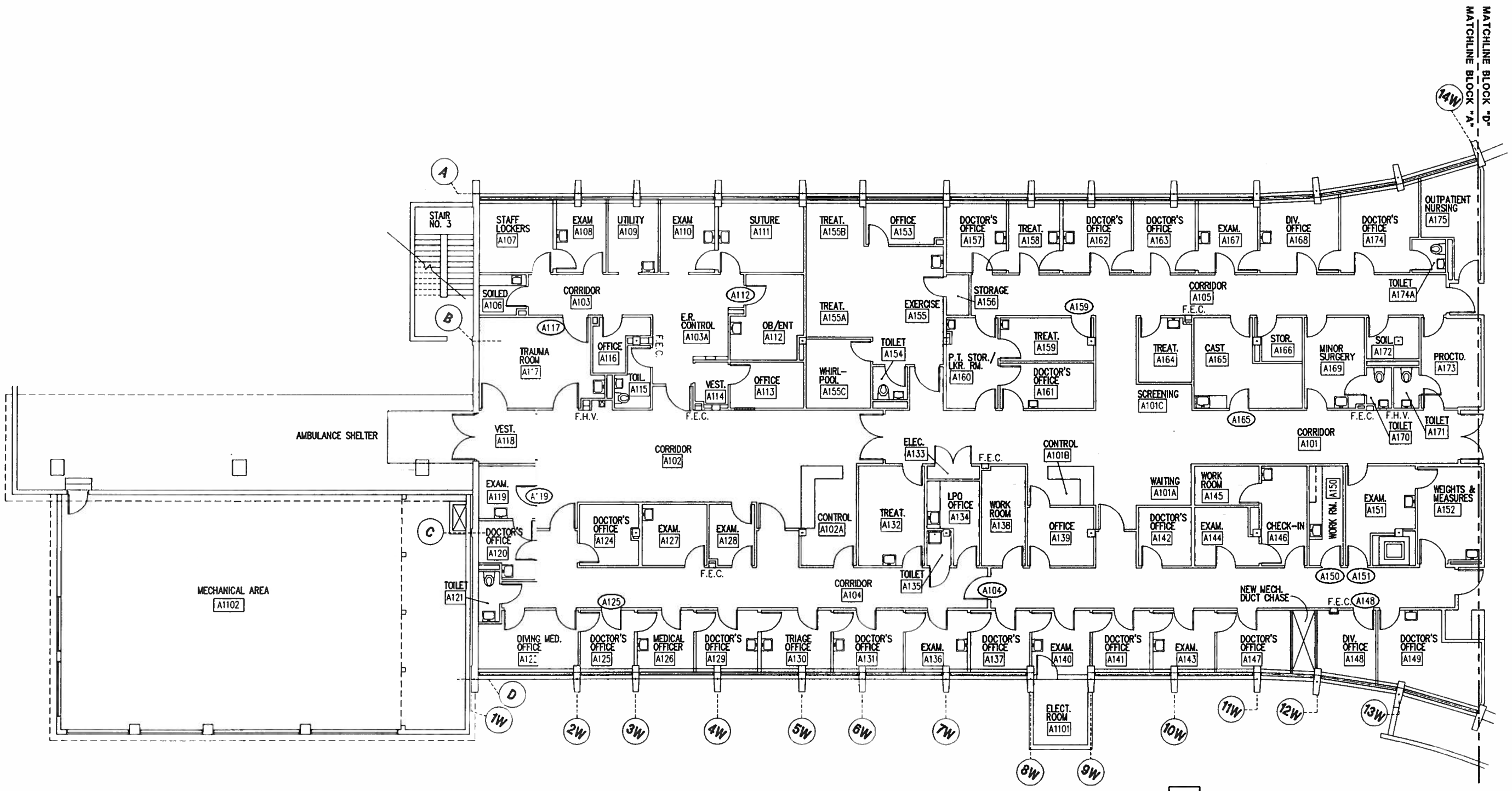

FIRST FLOOR PLAN - BLOCK A

SCALE: 1/8" = 1'-0"

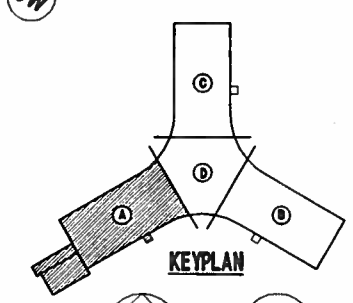

KEYPLAN

PLAN NORTH

TRUE NORTH

0 5 10 15 20

GRAPHIC SCALE

1/8" = 1'-0"

SHERLOCK, SMITH & ADAMS, INC.
ARCHITECTS - ENGINEERS
MONTGOMERY, ALABAMA

U.S. NAVAL STATION ROOSEVELT ROADS, P.R.

REPAIRS TO NAVAL HOSPITAL

FLOOR PLAN - FIRST FLOOR BLOCK A

CONSTR. CONTR. NO. | SPECIFICATION NO. | NAVFAC DRWG NO. | IF NO. | SHEET ? OF ??

SEAL AREA

ENG. DIV. DIR.: DATE:

SATISFACTORY TO: DATE:

DESIGN BY: RAS DRAWN BY: FLT

REVISION DESCRIPTION DATE

NAVAL FACILITIES ENGINEERING COMMAND

DEPARTMENT OF THE NAVY

NAVY PUBLIC WORKS CENTER, JACKSONVILLE, FL

U.S. NAVAL STATION ROOSEVELT ROADS, P.R.

REPAIRS TO NAVAL HOSPITAL

FLOOR PLAN - FIRST FLOOR BLOCK A

PLATE NO

A2-5

PWC #

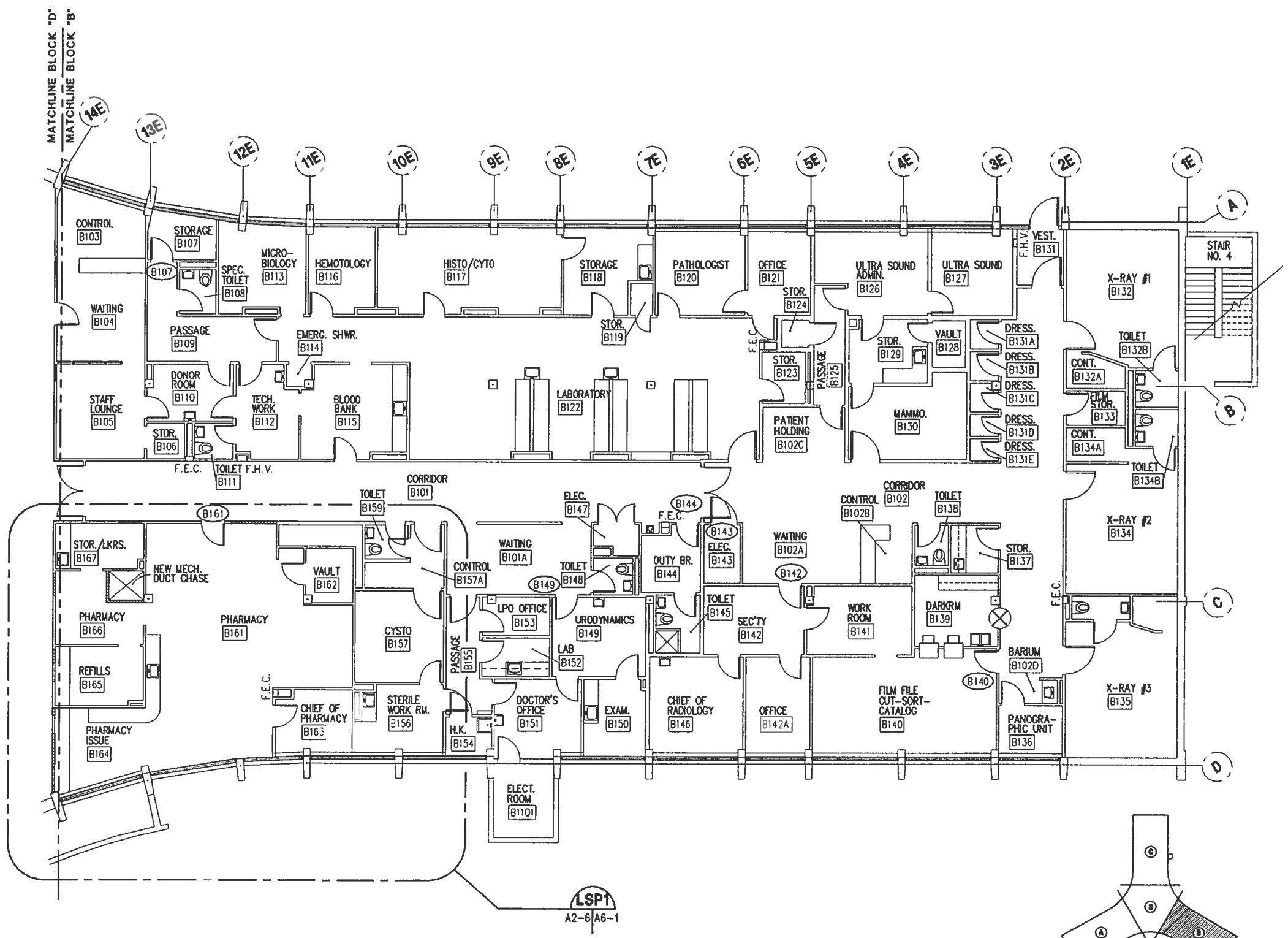

FIRST FLOOR PLAN - BLOCK B

SCALE: 1/8" = 1'-0"

SEAL AREA

ENG. CH. DR.: DATE: SATISFACTORY TO: DATE:

DESIGN BY: RAS DRAWN BY: FLT
CHK BY: RAS APPROVED:

REVISION DESCRIPTION | DATE

SHERLOCK, SMITH & ADAMS, INC.
ARCHITECTS - ENGINEERS
MONTGOMERY, ALABAMA

U.S. NAVAL STATION ROOSEVELT ROADS, P.R.
REPAIRS TO NAVAL HOSPITAL
FLOOR PLAN - FIRST FLOOR BLOCK B

CONSTR. CONTR. NO | SPECIFICATION NO | NAVFAC DRWG. NO. | TF NO | SHEET ? OF ??

DEPARTMENT OF THE NAVY
NAVAL FACILITIES ENGINEERING COMMAND
NAVY PUBLIC WORKS CENTER, JACKSONVILLE, FL
U.S. NAVAL STATION ROOSEVELT ROADS, P.R.
REPAIRS TO NAVAL HOSPITAL
FLOOR PLAN - FIRST FLOOR BLOCK B

CONSTR. CONTR. NO | NAVFAC DWG. NO | PWC DWG. NO

PLATE NO.
A2-6

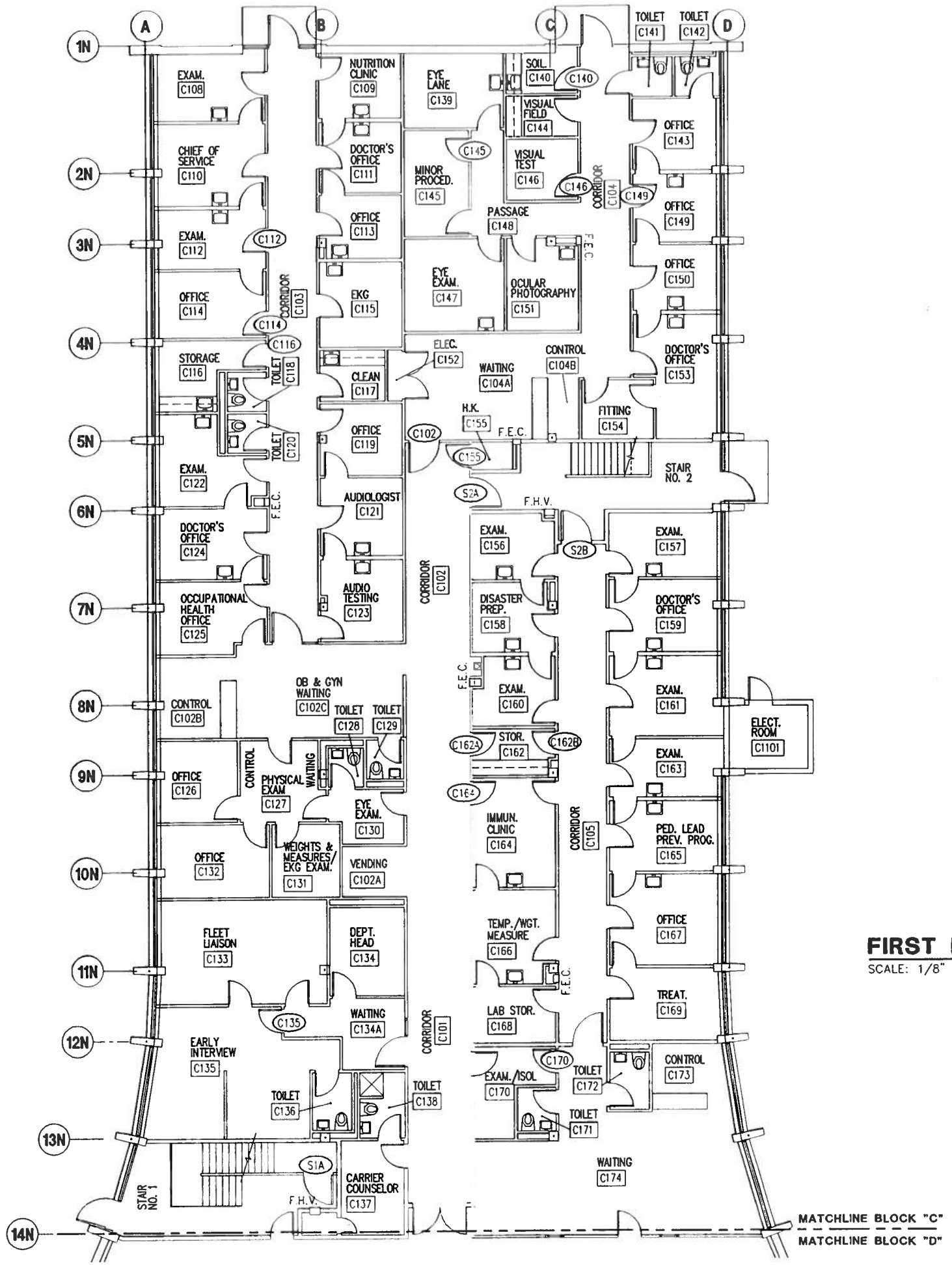

FIRST FLOOR PLAN - BLOCK C

SCALE: 1/8" = 1'-0"

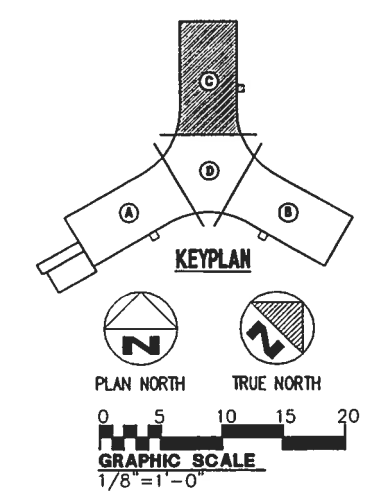

SHERLOCK, SMITH & ADAMS, INC.
ARCHITECTS - ENGINEERS
MONTGOMERY, ALABAMA

U.S. NAVAL STATION ROOSEVELT ROADS, P.R.
REPAIRS TO NAVAL HOSPITAL
FLOOR PLAN -- FIRST FLOOR BLOCK C

CONSTR. CONTR. NO. | SPECIFICATION NO. | NAVFAC DRWG. NO. | TF NO | SHEET ? OF ??

SEAL AREA

ENG. DIV. DIR.: DATE:
SATISFACTORY TO: DATE:
DESIGN BY: RAS DRAWN BY: FLT
CHK BY: RAS APPROVED:

REVISION DESCRIPTION | DATE

NAVAL FACILITIES ENGINEERING COMMAND
DEPARTMENT OF THE NAVY
NAVY PUBLIC WORKS CENTER, JACKSONVILLE, FL
U.S. NAVAL STATION ROOSEVELT ROADS, P.R.
REPAIRS TO NAVAL HOSPITAL
FLOOR PLAN - FIRST FLOOR BLOCK C

PLATE NO.
A2-7

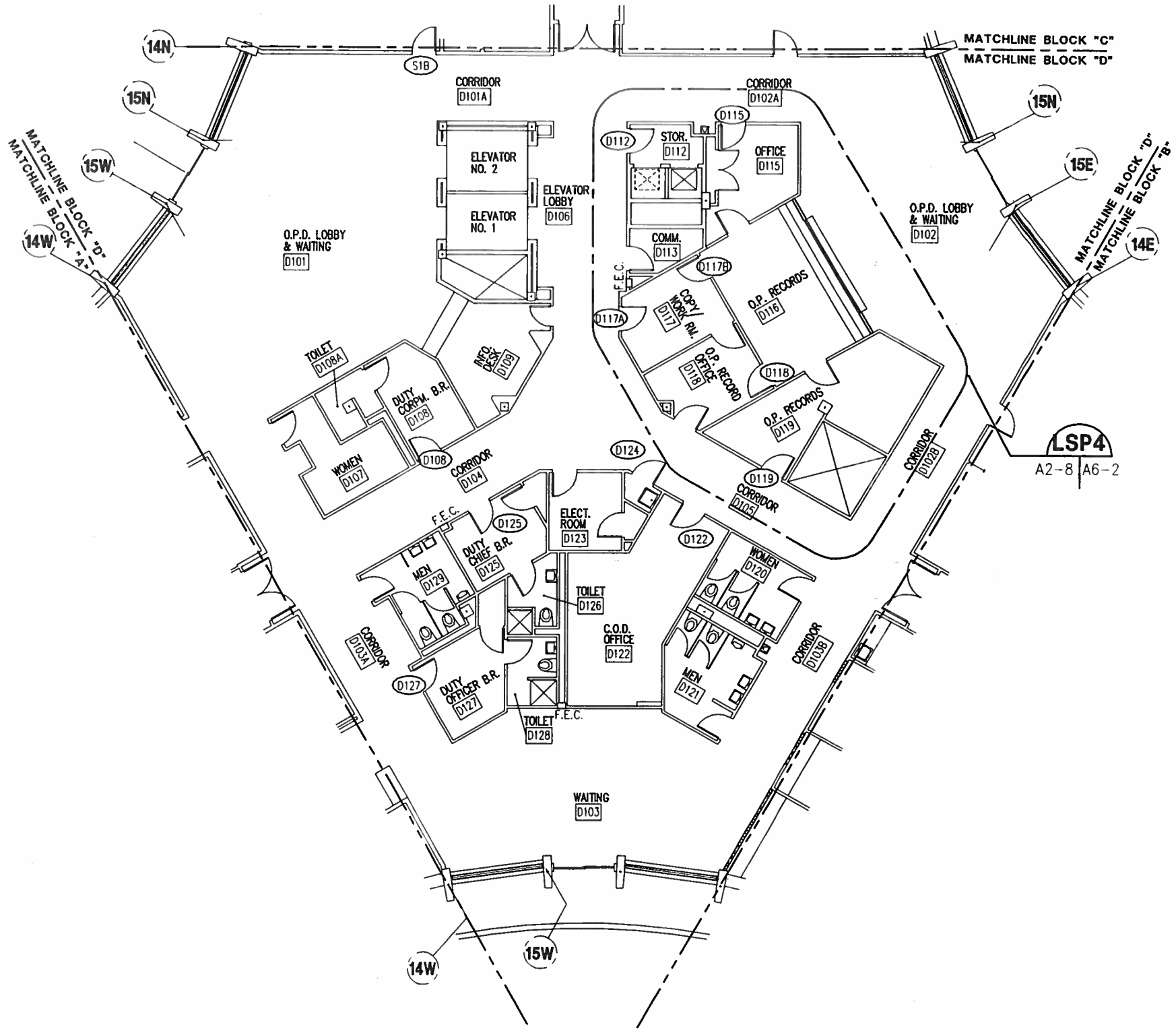

FIRST FLOOR PLAN - BLOCK D

SCALE: 1/8" = 1'-0"

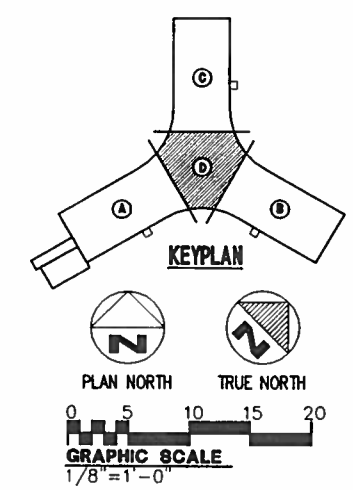

SHERLOCK, SMITH & ADAMS, INC.
ARCHITECTS – ENGINEERS
MONTGOMERY, ALABAMA

U.S. NAVAL STATION ROOSEVELT ROADS, P.R.
REPAIRS TO NAVAL HOSPITAL
FLOOR PLAN – FIRST FLOOR BLOCK D

CONSTR. CONTR. NO. | SPECIFICATION NO. | NAVFAC DRWG. NO. | TF NO. | SHEET ? OF ??

SEAL AREA

ENG. DIV. DIR.: DATE:
SATISFACTORY TO: DATE:
DESIGN BY: RAS DRAWN BY: FLT

REVISION DESCRIPTION | DATE

NAVAL FACILITIES ENGINEERING COMMAND
DEPARTMENT OF THE NAVY
NAVY PUBLIC WORKS CENTER, JACKSONVILLE, FL
U.S. NAVAL STATION ROOSEVELT ROADS, P.R.
REPAIRS TO NAVAL HOSPITAL
FLOOR PLAN – FIRST FLOOR BLOCK D

CONSTR. CONTR. NO. | NAVFAC DWG. NO.

PLATE NO.
A2-8

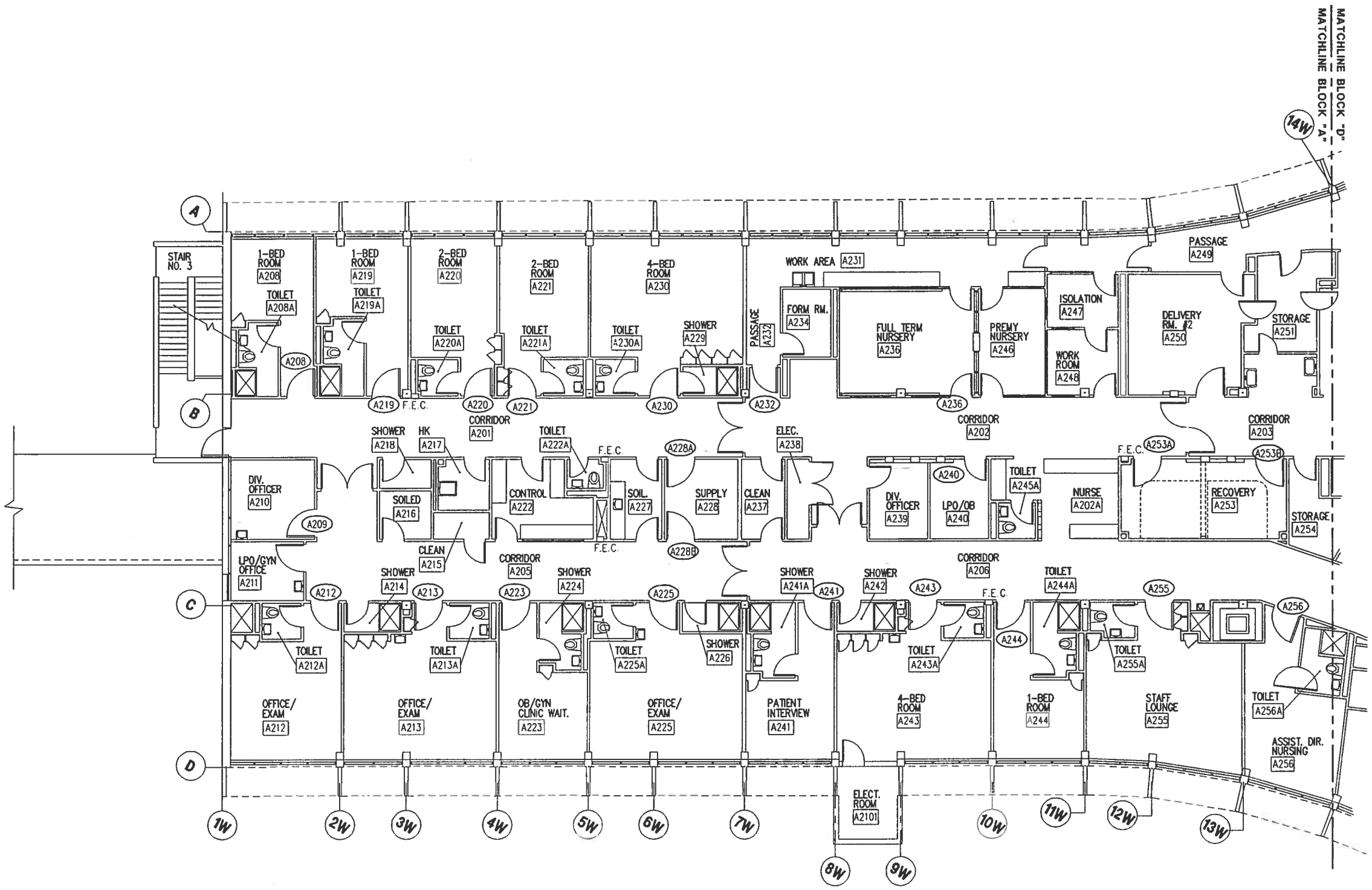

SECOND FLOOR PLAN - BLOCK A

SCALE: 1/8" = 1'-0"

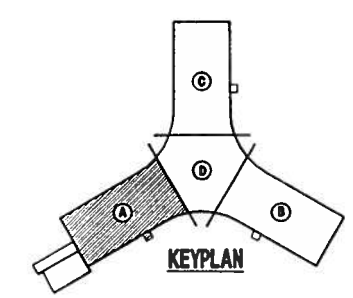

KEYPLAN

PLAN NORTH

TRUE NORTH

0 5 10 15 20

GRAPHIC SCALE

1/8"=1'-0"

SHERLOCK, SMITH & ADAMS, INC.
ARCHITECTS - ENGINEERS
MONTGOMERY, ALABAMA

U.S. NAVAL STATION ROOSEVELT ROADS, P.R.
REPAIRS TO NAVAL HOSPITAL
FLOOR PLAN - SECOND FLOOR BLOCK A

CONSTR. CONTR. NO. | SPECIFICATION NO. | NAVFAC DRWG. NO. | TF NO. | SHEET ? OF ??

SEAL AREA

ENG. OV. DR.: DATE:
SATISFACTORY TO: DATE:
DESIGN BY: RAS DRAWN BY: FLT
CHK BY: RAS APPROVED:

REVISION DESCRIPTION | DATE

NAVAL FACILITIES ENGINEERING COMMAND
DEPARTMENT OF THE NAVY
NAVY PUBLIC WORKS CENTER, JACKSONVILLE, FL
U.S. NAVAL STATION ROOSEVELT ROADS, P.R.
REPAIRS TO NAVAL HOSPITAL
FLOOR PLAN - SECOND FLOOR BLOCK A

PWC DWG. NO. | NAVFAC DWG. NO. | CONSTR. CONTR. NO.

PLATE NO.
A2-9

PWC #

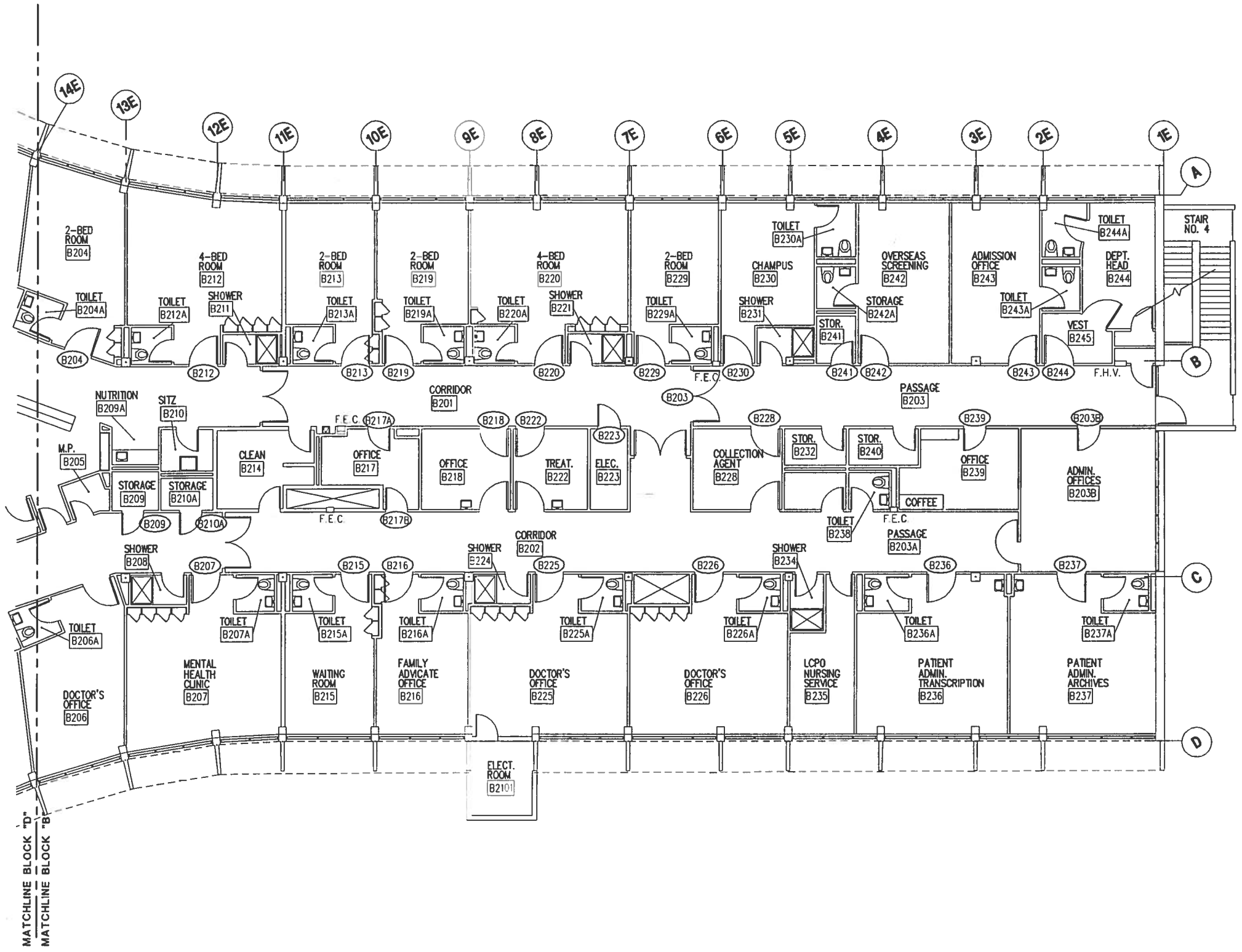

SECOND FLOOR PLAN - BLOCK B

SCALE: 1/8" = 1'-0"

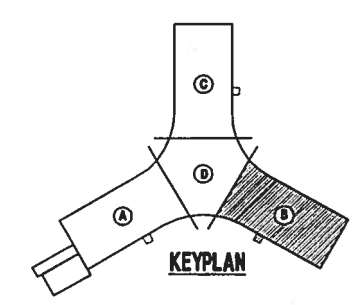

PLAN NORTH

TRUE NORTH

0 5 10 15 20

GRAPHIC SCALE
1/8"=1'-0"

SHERLOCK, SMITH & ADAMS, INC.
ARCHITECTS - ENGINEERS
MONTGOMERY, ALABAMA

U.S. NAVAL STATION ROOSEVELT ROADS, P.R.
REPAIRS TO NAVAL HOSPITAL
FLOOR PLAN - SECOND FLOOR BLOCK B

CONSTR. CONTR. NO. | SPECIFICATION NO. | NAVFAC DRWG. NO. | IT NO. | SHEET ? OF ??

SEAL AREA

ENG. OW. DAC.: DATE:
SATISFACTORY TO: DATE:
DESIGN BY: RAS DRAWN BY: FLT
CHK. BY: RAS APPROVED:

DATE	REVISION DESCRIPTION

NAVAL FACILITIES ENGINEERING COMMAND
DEPARTMENT OF THE NAVY
NAVY PUBLIC WORKS CENTER, JACKSONVILLE, FL
U.S. NAVAL STATION ROOSEVELT ROADS, P.R.
REPAIRS TO NAVAL HOSPITAL
FLOOR PLAN - SECOND FLOOR BLOCK B

PWC DWG. NO. | NAVFac DWG. NO. | CONSTR. CONTR. NO.

PLATE NO
A2-10

PWC #

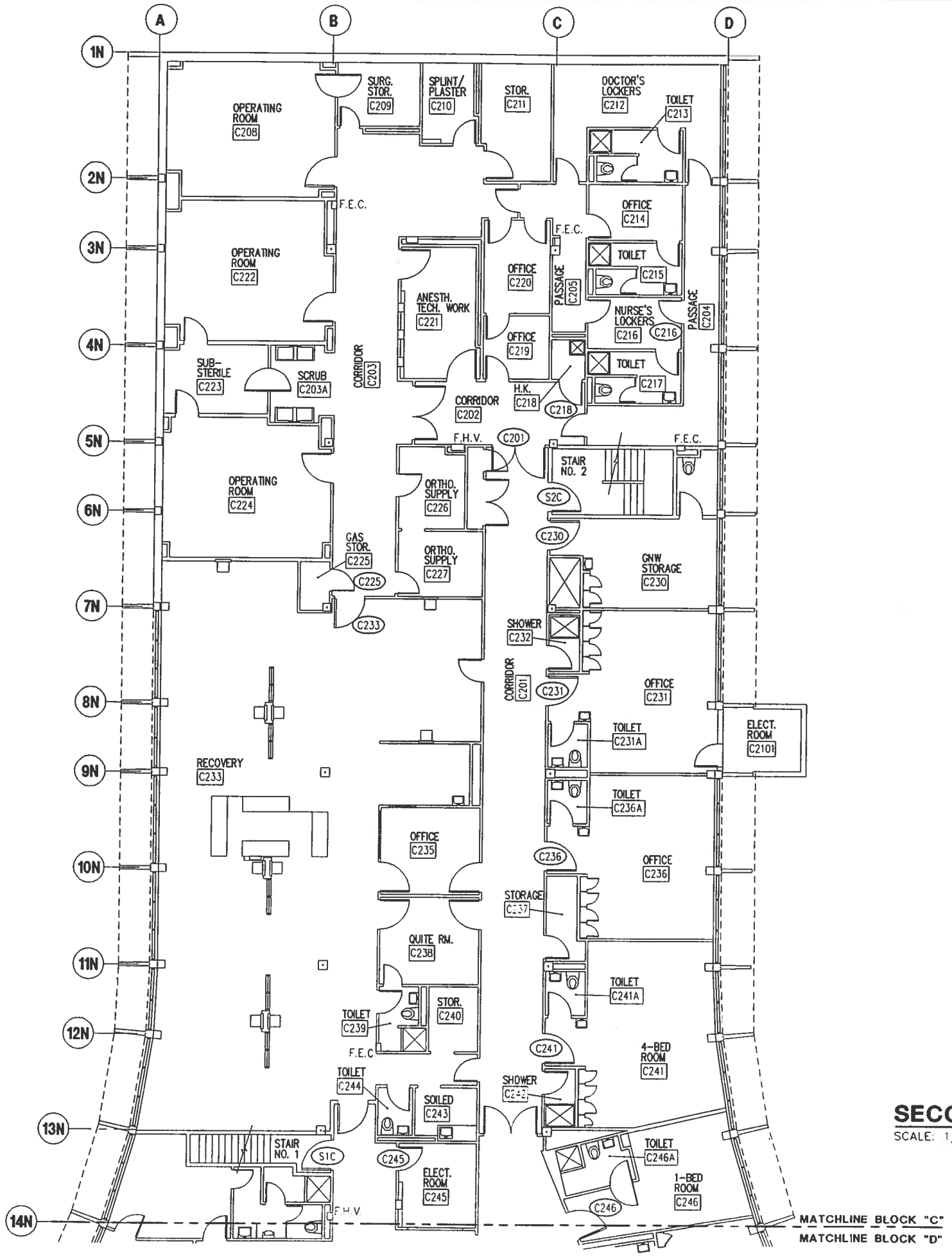

SECOND FLOOR PLAN - BLOCK C

SCALE: 1/8" = 1'-0"

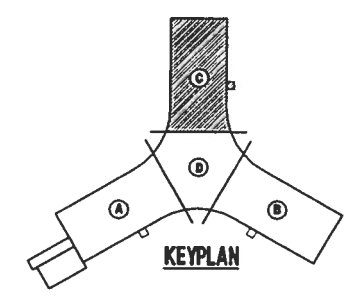

PLAN NORTH TRUE NORTH

0 5 10 15 20

GRAPHIC SCALE
1/8"=1'-0"

SHERLOCK, SMITH & ADAMS, INC.
ARCHITECTS – ENGINEERS
MONTGOMERY, ALABAMA

U.S. NAVAL STATION ROOSEVELT ROADS, P.R.
REPAIRS TO NAVAL HOSPITAL
FLOOR PLAN – SECOND FLOOR BLOCK C

CONSTR. CONTR. NO. | SPECIFICATION NO. | NAVFAC DRWG. NO. | TF NO. | SHEET ? OF ??

SEAL AREA

DIG. DIV. DIR.: DATE:
SATISFACTORY TO: DATE:
DESIGN BY: RAS DRAWN BY: RLT

REVISION DESCRIPTION | DATE

DEPARTMENT OF THE NAVY
NAVAL FACILITIES ENGINEERING COMMAND
NAVY PUBLIC WORKS CENTER, JACKSONVILLE, FL
U.S. NAVAL STATION ROOSEVELT ROADS, P.R.
REPAIRS TO NAVAL HOSPITAL
FLOOR PLAN – SECOND FLOOR BLOCK C

CONSTR. CONTR. NO. | NAVFAC DWG. NO. | PWC DWG. NO.

PLATE NO.
A2-11

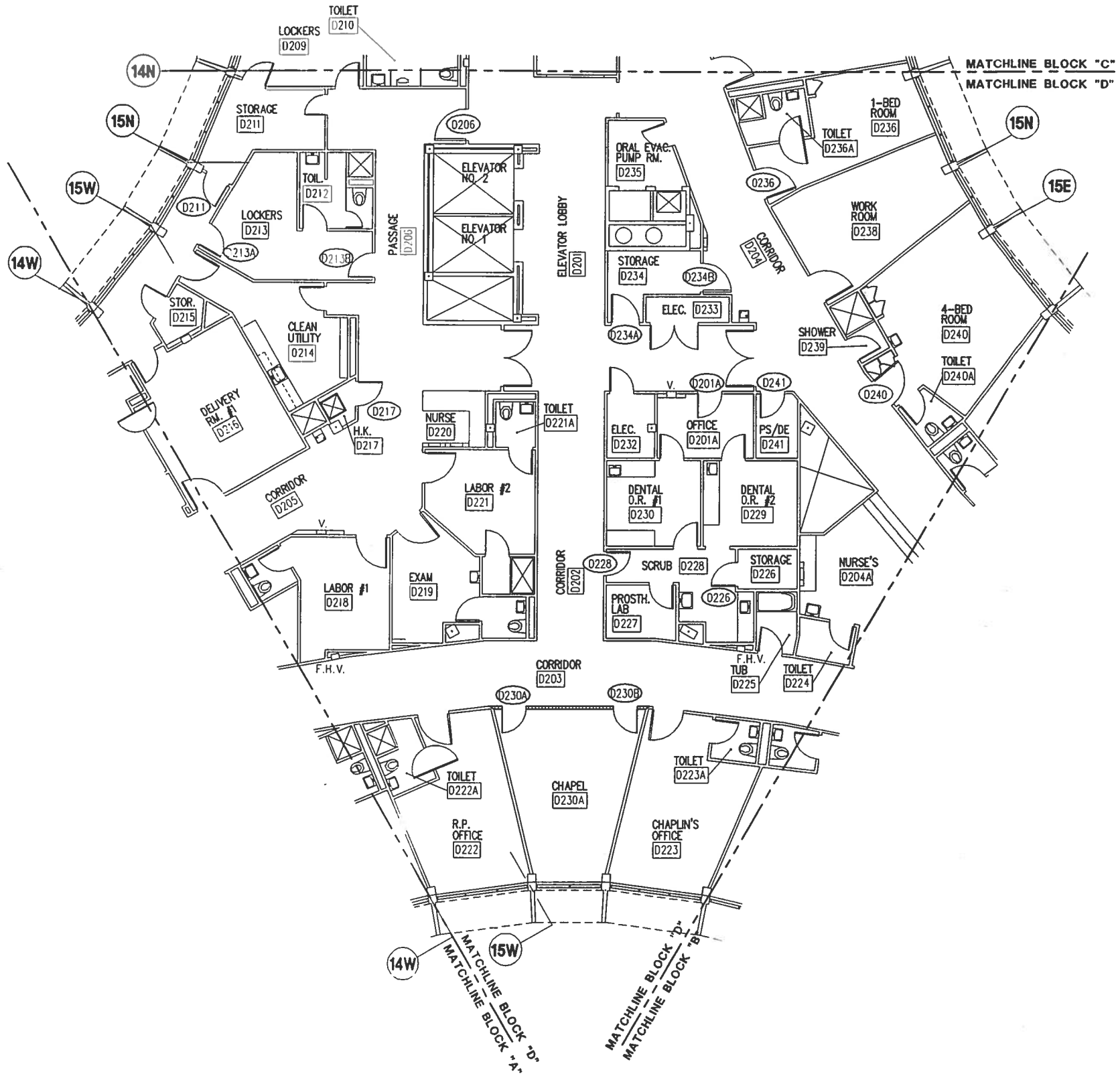

SECOND FLOOR PLAN - BLOCK D

SCALE 1/8" = 1'-0"

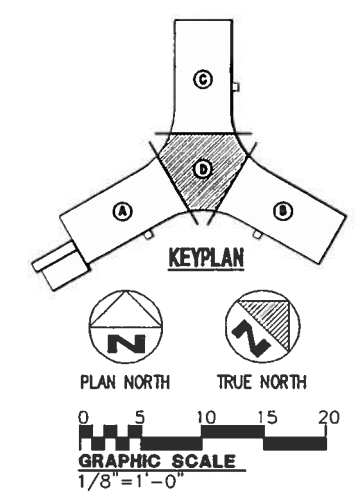

SHERLOCK, SMITH & ADAMS, INC.
ARCHITECTS – ENGINEERS
MONTGOMERY, ALABAMA

U.S. NAVAL STATION ROOSEVELT ROADS, P.R.
REPAIRS TO NAVAL HOSPITAL
FLOOR PLAN – SECOND FLOOR BLOCK D

CONSTR. CONTR. NO. | SPECIFICATION NO. | NAVFAC DRWG. NO. | TF NO | SHEET ? OF ??

SEAL AREA

ENG. DIV. DIR.: DATE:
SATISFACTORY TO: DATE:
DESIGN BY: RAS DRAWN BY: FLT
CHK BY: DLC APPROVED:

REVISION DESCRIPTION | DATE

NAVAL FACILITIES ENGINEERING COMMAND
DEPARTMENT OF THE NAVY
NAVY PUBLIC WORKS CENTER, JACKSONVILLE, FL
U.S. NAVAL STATION ROOSEVELT ROADS, P.R.
REPAIRS TO NAVAL HOSPITAL
FLOOR PLAN – SECOND FLOOR BLOCK D

CONSTR. CONTR. NO. | NAVFAC DWG. NO. | TPWC DWG. NO.

PLATE NO
A2-12

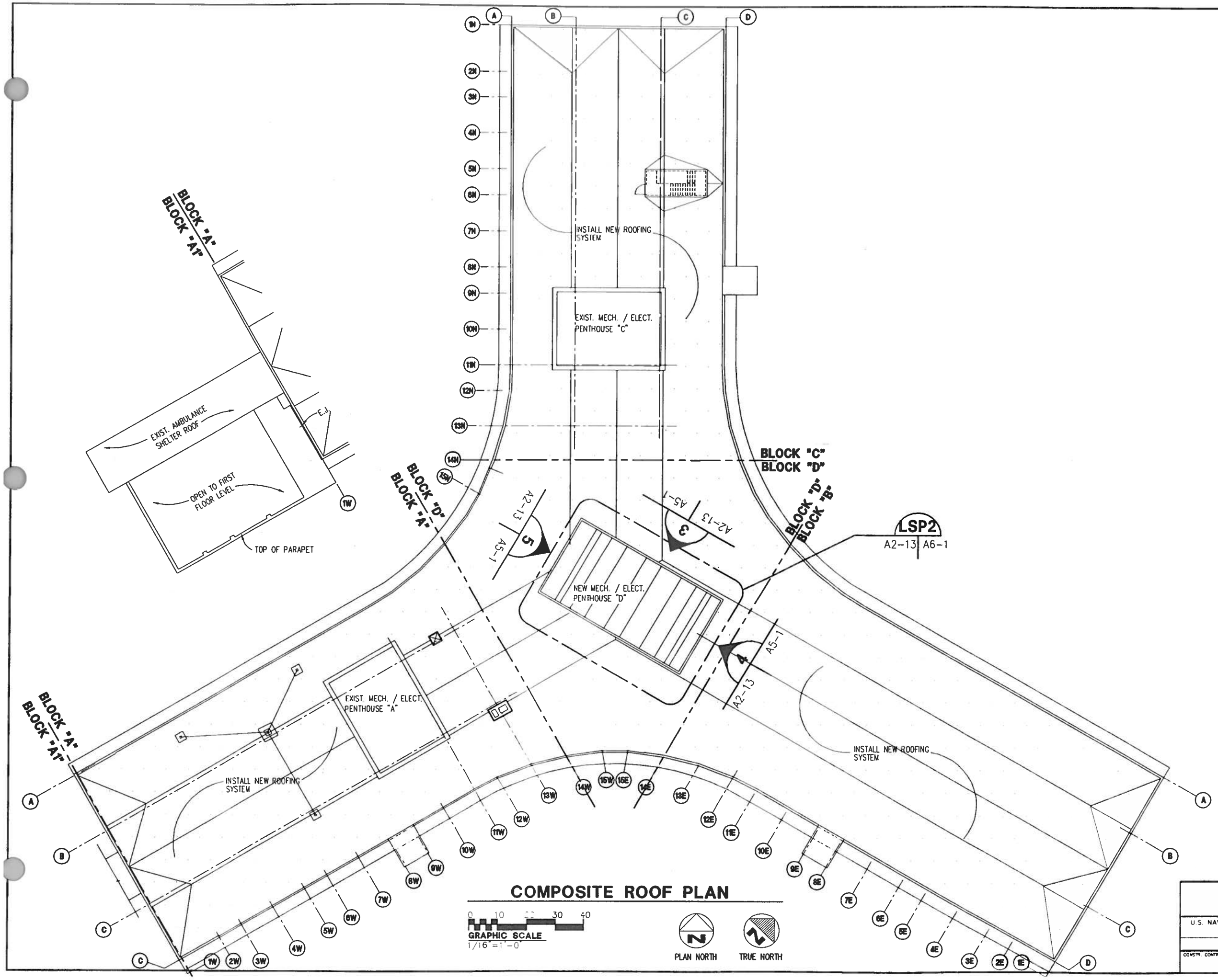

COMPOSITE ROOF PLAN

SEAL AREA

ENG. DIV. DIR.: DATE:
SATISFACTORY TO: DATE:
DESIGN BY: RAS
DRAWN BY: FLT

REVISION DESCRIPTION | DATE

NAVAL FACILITIES ENGINEERING COMMAND
DEPARTMENT OF THE NAVY
NAVY PUBLIC WORKS CENTER, JACKSONVILLE, FL
U.S. NAVAL STATION ROOSEVELT ROADS, P.R.
REPAIRS TO NAVAL HOSPITAL
COMPOSITE ROOF PLAN

PWC DWG. NO. | NAVFAC DWG. NO. | CONSTR. CONTR. NO.

SHERLOCK, SMITH & ADAMS, INC.
ARCHITECTS – ENGINEERS
MONTGOMERY, ALABAMA

U.S. NAVAL STATION ROOSEVELT ROADS, P.R.
REPAIRS TO NAVAL HOSPITAL
COMPOSITE ROOF PLAN

CONSTR. CONTR. NO. | SPECIFICATION NO. | NAVFAC DRWG. NO. | TF NO.
SHEET ? OF ??

PLATE NO.
A2-13

FINISH SCHEDULE

ROOM NO.	ROOM NAME	FLOOR EXIST.	FLOOR NEW	BASE EXIST.	BASE NEW	WALLS NORTH EXIST.	WALLS NORTH NEW	WALLS EAST EXIST.	WALLS EAST NEW	WALLS SOUTH EXIST.	WALLS SOUTH NEW	WALLS WEST EXIST.	WALLS WEST NEW	CEILINGS MATERIAL EXIST.	CEILINGS MATERIAL NEW	CEILINGS HGT. EXIST.	CEILINGS HGT. NEW	REMARKS
SB1	BOILER ROOM	CCS	—	—	—	EXP	—	EXP	—	EXP	—	EXP	—	EXP	—			
SB2	EQUIPMENT ROOM	CCS	—	—	—	EXP	—	EXP	—	EXP	—	EXP	—	EXP	—			
A01	CORRIDOR	CP	—	RB	—	PVF	—	PVF	—	PVF	—	PVF	—	AT-A	AT-1	8'-0"	8'-0"	
A02	CORRIDOR	CP	—	RB	—	GVF	—	PVF	—	PVF	—	PVF	—	AT-A	AT-1	8'-0"	8'-0"	
A03	CORRIDOR	CP	—	RB	—	GVF	—	PVF	—	PVF	—	PVF	—	AT-A	AT-1	8'-0"	8'-0"	
A05	QUALITY IMPROVEMENT & RISK MANAGEMENT	VT-1	—	RB	—	PPT	—	PPT	—	PPT	—	PPT	—	ASP	AT-1	8'-6"	8'-6"	
A05A	OFFICE	VT-1	—	RB	—	PPT	—	PPT	—	PPT	—	PPT	—	ASP	AT-1	8'-6"	8'-6"	
A05C	OFFICE	VT-1	—	RB	—	PPT	—	PPT	—	PPT	—	PPT	—	ASP	AT-1	8'-6"	8'-6"	
A06	NURSING SERVICE DIRECTOR OFFICE	VT-1	—	RB	—	PPT	—	PPT	—	PPT	—	PPT	—	ASP	AT-1	8'-0"	8'-0"	
A07	NURSING SERVICE DIRECTOR SECRETARY	VT-1	—	RB	—	PPT	—	PPT	—	PPT	—	PPT	—	ASP	AT-1	8'-0"	8'-0"	
A08	C.O. OFFICE	CP	—	CT	—	PPT	—	PPT	—	PPT	—	PPT	—	ASP	AT-1	8'-6"	8'-6"	
A010	SECRETARY	VT-1	—	RB	—	PPT	—	PPT	—	PPT	—	PPT	—	ASP	AT-1	8'-6"	8'-6"	
A011	OFFICE	VT-1	—	RB	—	PPT	—	PPT	—	PPT	—	PPT	—	ASP	AT-1	8'-0"	8'-0"	
A012	ADMIN. OFFICE	VT-1	—	RB	—	PPT	—	PPT	—	PPT	—	PPT	—	ASP	AT-1	8'-0"	8'-0"	
A016	MANPOWER	VT-1	—	RB	—	PPT	—	PPT	—	PPT	—	PPT	—	ASP	AT-1	8'-6"	8'-6"	
A016A	WORK ROOM	VT-1	—	RB	—	PPT	—	PPT	—	PPT	—	PPT	—	ASP	AT-1	8'-6"	8'-6"	
A016B	OFFICE	VT-1	—	RB	—	PPT	—	PPT	—	PPT	—	PPT	—	ASP	AT-1	8'-6"	8'-6"	
A016C	OFFICE	VT-1	—	RB	—	PPT	—	PPT	—	PPT	—	PPT	—	ASP	AT-1	8'-6"	8'-6"	
A018	EFFICIENCY REV. COORD.	VT-1	—	RB	—	PPT	—	PPT	—	PPT	—	PPT	—	ASP	AT-1	8'-6"	8'-6"	
A019	MANAGEMENT CONTROL PROGRAM COORDINATOR	VT-1	—	RB	—	PPT	—	PPT	—	PPT	—	PPT	—	ASP	AT-1	8'-0"	8'-0"	
A020	OFFICE	VT-1	—	RB	—	PPT	—	PPT	—	PPT	—	PPT	—	ASP	AT-1	8'-0"	8'-0"	
A022	X.O. OFFICE	VT-1	—	RB	—	PPT	—	PPT	—	PPT	—	PPT	—	ASP	AT-1	8'-6"	8'-6"	
A025	OFFICE	CP	—	RB	—	PPT	—	PPT	—	PPT	—	PPT	—	AT-1	AT-1	8'-6"	8'-6"	NOTE #1
A026	MED. LAB	CP	—	RB	—	PPT	—	PPT	—	PPT	—	PPT	—	AT-1	AT-1	8'-6"	8'-6"	NOTE #1
A027	OFFICE	VT-1	—	RB	—	PPT	—	PPT	—	PPT	—	PPT	—	ASP	AT-1	8'-0"	8'-0"	
A028	CLASSROOM	VT-1	—	RB	SPM	PPT	—	PPT	SPT	PPT	—	PPT	—	ASP	AT-1	8'-6"	8'-6"	
A034	EDUCATION DEPT.	VT-1	—	RB	—	PPT	—	PPT	—	PPT	—	PPT	—	ASP	AT-1	8'-6"	8'-6"	
A035	SNACK BAR	QT	—	QT	—	PLG	—	PLG	—	PLG	—	PLG	—	PPT	AT-1	8'-6"	8'-6"	
A036	VENDING	VT-1	—	RB	SPM	PVF	—	PVF	SPM	PVF	SPM	PVF	—	PPT	AT-1	8'-6"	8'-6"	
A037	STORAGE	CCS	—	CCS	—	PPT	—	PPT	—	PPT	—	PPT	—	ASP	AT-1	8'-0"	8'-0"	
A038	OFFICE	VT-1	—	RB	—	PPT	—	PPT	—	PPT	—	PPT	—	ASP	AT-1	8'-0"	8'-0"	
A040	STORAGE	VT-1	—	RB	—	PPT	—	PPT	—	PPT	—	PPT	—	ASP	AT-1	8'-0"	8'-0"	
A041	SECURITY	VT-1	—	RB	—	PPT	—	PPT	—	PPT	—	PPT	—	ASP	AT-1	8'-0"	8'-0"	
A042	STORAGE	VT-1	—	RB	—	PPT	—	PPT	—	PPT	—	PPT	—	ASP	AT-1	8'-0"	8'-0"	
A043	PREVENTIVE MEDICINE	VT-1	—	RB	—	PPT	—	PPT	—	PPT	—	PPT	—	AT-A	AT-1	8'-0"	8'-0"	
A043A	OFFICE	VT-1	—	RB	—	PPT	—	PPT	—	PPT	—	PPT	—	AT-A	AT-1	8'-0"	8'-0"	
A044	CONFERENCE	VT-1	—	RB	—	PPT	—	PPT	—	PPT	—	PPT	—	ASP	AT-1	8'-6"	8'-6"	
A045	STORAGE	VT-1	—	RB	—	PPT	—	PPT	—	PPT	—	PPT	—	ASP	AT-1	8'-0"	8'-0"	
B01	CORRIDOR	VT-1	—	RB	—	PPT	—	PPT	—	PPT	—	PPT	—	AT-1	AT-1	8'-0"	8'-0"	NOTE #1
B02	MANAGEMENT INFO. SYSTEMS	CP	—	RB	—	SPW	—	SPW	—	SPW	—	SPW	—	AT-A	AT-1	8'-0"	8'-0"	
B02A	SECRETARY	CP	—	RB	—	SPW	—	SPW	—	SPW	—	SPW	—	AT-A	AT-1	8'-0"	8'-0"	
B02B	OFFICE	CP	—	RB	—	SPW	—	SPW	—	SPW	—	SPW	—	AT-A	AT-1	8'-0"	8'-0"	
B02D	CORRIDOR	VT-2	—	RB	—	GPT	—	GPT	—	GPT	—	GPT	—	AT-A	AT-1	8'-0"	8'-0"	
B02E	CORRIDOR	CP	—	RB	—	SPW	—	SPW	—	SPW	—	SPW	—	AT-A	AT-1	8'-0"	8'-0"	
B02F	CORRIDOR	CP	—	RB	—	SPW	—	SPW	—	SPW	—	SPW	—	AT-A	AT-1	8'-0"	8'-0"	

FINISH LEGEND

AT-A	ACOUSTICAL TILE CEILING (EXISTING 2X4)
AT-1	ACOUSTICAL TILE CEILING (2X2 STANDARD FINISH)
AT-2	ACOUSTICAL TILE CEILING (2X2 WATER PROOF FINISH)
ASP	ACOUSTICAL CONCEALED SPLINE CEILING
MSP	METAL CONCEALED SPLINE CEILING
PPT	PLASTER PAINTED
PSP	PLASTER SPRAYED TEXTURED FINISH
PLG	PLASTER LIQUID GLAZED COATING
GPT	GYPSUM WALL BOARD PAINTED
GLG	GYPSUM WALL BOARD LIQUID GLAZED COATING
CPT	CONCRETE PAINTED
CCS	CONCRETE WITH CONCRETE SEALER
CT	CERAMIC TILE
PVF	PLASTER WITH VINYL WALL FABRIC
GVF	GYPSUM WALL BOARD W/ VINYL WALL FABRIC
QT	QUARRY TILE
CP	CARPET
VT-1	VINYL ASBESTOS TILE
VT-2	VINYL COMPOSITION TILE
SV	SHEET VINYL
EP	EPOXY TERRAZZO
SPCF	CONDUCTIVE FLOORING
SPT	PATCH & PAINT TO MATCH EXISTING
SPM	PATCH TO MATCH EXISTING
SPW	PLYWOOD PANELING
RB	RESILIENT BASE
EXP	EXPOSED STRUCTURE

NOTE #1 REMOVE EXISTING LAY-IN ACOUSTICAL CEILING SYSTEM TO EXTENT REQUIRED TO ACCOMPLISH WORK ABOVE CEILING. (STORE MATERIALS AND RE-INSTALL EXISTING CEILING SYSTEM)

SEAL AREA

DRAWN BY: FLT
DESIGN BY: RAS
DIV. OW. DIR.: DATE
SATISFACTORY TO: DATE

REVISION DESCRIPTION | DATE

NAVAL FACILITIES ENGINEERING COMMAND
DEPARTMENT OF THE NAVY
NAVY PUBLIC WORKS CENTER, JACKSONVILLE, FL
U.S. NAVAL STATION ROOSEVELT ROADS, P.R.
REPAIRS TO NAVAL HOSPITAL
FINISH SCHEDULE

SHERLOCK, SMITH & ADAMS, INC.
ARCHITECTS – ENGINEERS
MONTGOMERY, ALABAMA

U.S. NAVAL STATION ROOSEVELT ROADS, P.R.
REPAIRS TO NAVAL HOSPITAL
FINISH SCHEDULE

CONSTR. CONTR. NO. | SPECIFICATION NO. | NAVFAC DRWG. NO. | TF NO | SHEET ? OF ??

PLATE NO
A3-1

FINISH SCHEDULE

ROOM NO.	ROOM NAME	FLOOR EXIST.	FLOOR NEW	BASE EXIST.	BASE NEW	WALLS NORTH EXIST.	WALLS NORTH NEW	WALLS EAST EXIST.	WALLS EAST NEW	WALLS SOUTH EXIST.	WALLS SOUTH NEW	WALLS WEST EXIST.	WALLS WEST NEW	CEILINGS MATERIAL EXIST.	CEILINGS MATERIAL NEW	CEILINGS HGT. EXIST.	CEILINGS HGT. NEW	REMARKS
B05	MORGUE	VT-1	—	RB	—	PLG	—	PLG	—	PLG	—	PLG	—	PPT	AT-2	8'-0"	8'-0"	
B06	GROSS PATH. AUTOPSY	QT	—	QT	—	PLG	—	PLG	—	PLG	—	PLG	—	PPT	AT-2	8'-6"	8'-6"	
B010	KITCHEN	QT	—	QT	—	PLG	—	PLG	—	PLG	—	PLG	—	MSP	AT-2	8'-6"	8'-6"	
B011	DISHWASHING	QT	—	QT	SPM	PPT	SPT	PPT	SPT	PPT	—	PPT	—	ASP	AT-2	8'-6"	8'-6"	
B012	FOOD SERVICE	VT-1	—	RB	—	PPT	—	PPT	—	PPT	—	PPT	—	ASP	AT-1	8'-6"	8'-6"	
B013	CLINICAL NUTRITION	VT-1	—	RB	SPM	PPT	—	PPT	—	PPT	SPT	PPT	—	ASP	AT-1	8'-6"	8'-6"	
B016	PASSAGE	QT	—	QT	SPM	PPT	—	PPT	—	PPT	SPT	PPT	—	PPT	AT-2	8'-6"	8'-6"	
C01	CORRIDOR	VT-1	—	RB	SPM	PVF	—	PVF	SPT	PVF	—	PVF	—	AT-1	AT-1	8'-0"	8'-0"	NOTE #1
C02	HOUSEKEEPING	VT-1	—	RB	—	PPT	—	PPT	—	PPT	—	PPT	—	ASP	AT-1	8'-6"	8'-6"	
C09	SOILED REC. & CLEAN-UP	VT-1	—	RB	SPM	PPT	—	PPT	SPT	PPT	—	PPT	—	ASP	AT-2	8'-6"	8'-6"	
C09A	PASSAGE	VT-1	—	RB	SPM	PPT	SPT	PPT	SPT	PPT	SPT	PPT	SPT	ASP	AT-1	8'-6"	8'-6"	
C010	STERILIZER	VT-1	—	RB	SPM	PPT	SPT	PPT	—	PPT	—	PPT	—	ASP	AT-1	8'-6"	8'-6"	
C011	PREP AREA	VT-1	—	RB	SPM	PPT	—	PPT	—	PPT	SPT	PPT	SPT	AT-A	AT-2	8'-6"	8'-6"	
C012	PASSAGE	VT-1	—	RB	SPM	PPT	—	PPT	SPT	PPT	—	PPT	—	ASP	AT-2	8'-6"	8'-6"	
C013	LINEN CART STORAGE	VT-1	—	RB	SPM	PPT	SPT	PPT	—	PPT	—	PPT	—	ASP	AT-1	8'-6"	8'-6"	
C017	STORAGE	VT-1	—	RB	—	PPT	—	PPT	—	PPT	—	PPT	—	AT-A	AT-1	8'-0"	8'-0"	
C018	MED. EQUIPMENT STORAGE	VT-1	—	RB	SPM	PPT	SPT	PPT	—	PPT	SPT	PPT	SPT	AT-A	AT-1	8'-0"	8'-0"	
D01	CORRIDOR	VT-1	—	RB	—	PVF	—	PVF	—	PVF	—	PVF	—	AT-1	AT-1	8'-0"	8'-0"	NOTE #1
D02	ELEVATOR LOBBY	VT-1	—	RB	—	PPT	—	PPT	—	PPT	—	PPT	—	AT-1	AT-1	8'-6"	8'-0"	NOTE #1
D03	CORRIDOR	VT-1	—	RB	—	PPT	—	PPT	—	PPT	—	PPT	—	AT-1	AT-1	8'-0"	8'-0"	NOTE #1
D04	LOBBY	VT-1	—	RB	—	PPT	—	PPT	—	PPT	—	PPT	—	AT-1	AT-1	8'-0"	8'-0"	NOTE #1
D05	CORRIDOR	VT-1	—	RB	—	PVF	—	PVF	—	PVF	—	PVF	—	AT-1	AT-1	8'-0"	8'-0"	NOTE #1
D06	PREVENTIVE MEDICINE	VT-1	—	RB	—	PPT	—	PPT	—	PPT	—	PPT	—	AT-A	AT-1	8'-0"	8'-0"	
D07	RESERVE MED.	VT-1	—	RB	—	PPT	—	PPT	—	PPT	—	PPT	—	ASP	AT-1	8'-0"	8'-0"	
D09	CAFETERIA	VT-1	—	RB	—	PVF	—	PVF	—	PVF	—	PVF	—	ASP	AT-1	8'-6"	8'-6"	
D018	PASSAGE	VT-1	—	RB	—	PLG	—	PLG	—	PLG	—	PLG	—	AT-A	AT-1	8'-0"	8'-0"	
D021	CLEAN LINEN	VT-1	—	RB	—	PPT	—	PPT	—	PPT	—	PPT	—	ASP	AT-1	8'-0"	8'-0"	
D023	INDUSTRIAL HYGIENE	CCS	—	CCS	—	PPT	—	PPT	—	PPT	—	PPT	—	PPT	AT-1	8'-0"	8'-0"	
D024	OFFICE	VT-1	—	RB	—	PPT	—	PPT	—	PPT	—	PPT	—	ASP	AT-1	8'-0"	8'-0"	
D025	INDUSTRIAL HYGIENE	VT-1	—	RB	—	PPT	—	PPT	—	PPT	—	PPT	—	ASP	AT-1	8'-0"	8'-0"	
A101	CORRIDOR	VT-1	—	RB	—	PVF	—	PVF	—	PVF	—	PVF	—	AT-A	AT-1	8'-0"	8'-0"	
A101A	WAITING	VT-1	—	RB	—	PVF	—	PVF	—	PVF	—	PVF	—	AT-A	AT-1	8'-6"	8'-6"	
A101B	CONTROL	VT-1	—	RB	—	PVF	—	PVF	—	PVF	—	PVF	—	AT-A	AT-1	8'-6"	8'-6"	
A101C	SCREENING	VT-1	—	RB	—	PVF	—	PVF	—	PVF	—	PVF	—	AT-A	AT-1	8'-0"	8'-0"	
A102	CORRIDOR	VT-1	—	RB	SPM	PVF	—	PVF	—	PVF	—	PVF	SPT	AT-A	AT-1	8'-0"	8'-0"	
A102A	CONTROL	VT-1	—	RB	—	PVF	—	PVF	—	PVF	—	PVF	—	AT-A	AT-1	8'-0"	8'-0"	
A103	CORRIDOR	VT-1	—	RB	—	PVF	—	PVF	—	PVF	—	PVF	—	AT-A	AT-1	8'-0"	8'-0"	
A103A	E.R. CONTROL	VT-1	—	RB	—	PVF	—	PVF	—	PVF	—	PVF	—	AT-A	AT-1	8'-0"	8'-0"	
A104	CORRIDOR	VT-1	—	RB	—	PVF	—	PVF	—	PVF	—	PVF	—	AT-A	AT-1	8'-0"	8'-0"	
A105	CORRIDOR	VT-1	—	RB	—	PVF	—	PVF	—	PVF	—	PVF	—	AT-A	AT-1	8'-0"	8'-0"	
A107	STAFF LOCKERS	VT-1	—	RB	—	PPT	—	PPT	—	PPT	—	PPT	—	ASP	AT-1	8'-6"	8'-6"	
A108	EXAM	VT-1	—	RB	—	PPT	—	PPT	—	PPT	—	PPT	—	ASP	AT-1	8'-6"	8'-6"	
A109	UTILITY	VT-1	—	RB	—	PPT	—	PPT	—	PPT	—	PPT	—	PPT	AT-1	8'-0"	8'-0"	
A110	EXAM	VT-1	—	RB	—	PPT	—	PPT	—	PPT	—	PPT	—	ASP	AT-1	8'-6"	8'-6"	
A111	SUTURE	VT-1	—	RB	—	PPT	—	PPT	—	PPT	—	PPT	—	ASP	AT-1	8'-6"	8'-6"	
A112	OB/ENT	VT-1	—	RB	—	PPT	—	PPT	—	PPT	—	PPT	—	ASP	AT-1	8'-0"	8'-0"	

FINISH LEGEND

AT-A	ACOUSTICAL TILE CEILING (EXISTING 2X4)
AT-1	ACOUSTICAL TILE CEILING (2X2 STANDARD FINISH)
AT-2	ACOUSTICAL TILE CEILING (2X2 WATER PROOF FINISH)
ASP	ACOUSTICAL CONCEALED SPLINE CEILING
MSP	METAL CONCEALED SPLINE CEILING
PPT	PLASTER PAINTED
PSP	PLASTER SPRAYED TEXTURED FINISH
PLG	PLASTER LIQUID GLAZED COATING
GPT	GYPSUM WALL BOARD PAINTED
GLG	GYPSUM WALL BOARD LIQUID GLAZED COATING
CPT	CONCRETE PAINTED
CCS	CONCRETE WITH CONCRETE SEALER
CT	CERAMIC TILE
PVF	PLASTER WITH VINYL WALL FABRIC
GVF	GYPSUM WALL BOARD W/ VINYL WALL FABRIC
QT	QUARRY TILE
CP	CARPET
VT-1	VINYL ASBESTOS TILE
VT-2	VINYL COMPOSITION TILE
SV	SHEET VINYL
EP	EPOXY TERRAZZO
SPCF	CONDUCTIVE FLOORING
SPT	PATCH & PAINT TO MATCH EXISTING
SPM	PATCH TO MATCH EXISTING
SPW	PLYWOOD PANELING
RB	RESILIENT BASE
EXP	EXPOSED STRUCTURE

NOTE #1 REMOVE EXISTING LAY-IN ACOUSTICAL CEILING SYSTEM TO EXTENT REQUIRED TO ACCOMPLISH WORK ABOVE CEILING. (STORE MATERIALS AND RE-INSTALL EXISTING CEILING SYSTEM)

SEAL AREA

DESIGN BY: RAS DRAWN BY: FLT
CHK BY: RAS APPROVED:

DIV. OR DIR.: DATE: SATISFACTORY TO: DATE:

DATE	REVISION DESCRIPTION

DEPARTMENT OF THE NAVY — NAVAL FACILITIES ENGINEERING COMMAND
NAVY PUBLIC WORKS CENTER, JACKSONVILLE, FL
U.S. NAVAL STATION ROOSEVELT ROADS, P.R.
REPAIRS TO NAVAL HOSPITAL
FINISH SCHEDULE

CONSTR. CONTR. NO. | NAVFAC DWG. NO. | PWC DWG. NO.

SHERLOCK, SMITH & ADAMS, INC.
ARCHITECTS – ENGINEERS
MONTGOMERY, ALABAMA

U.S. NAVAL STATION ROOSEVELT ROADS, P.R.
REPAIRS TO NAVAL HOSPITAL
FINISH SCHEDULE

CONSTR. CONTR. NO. | SPECIFICATION NO. | NAVFAC DWG. NO. | TF NO. | SHEET ? OF ??

PLATE NO.
A3-2

FINISH SCHEDULE

ROOM NO.	ROOM NAME	FLOOR EXIST.	FLOOR NEW	BASE EXIST.	BASE NEW	WALLS NORTH EXIST.	WALLS NORTH NEW	WALLS EAST EXIST.	WALLS EAST NEW	WALLS SOUTH EXIST.	WALLS SOUTH NEW	WALLS WEST EXIST.	WALLS WEST NEW	CEILINGS MATERIAL EXIST.	CEILINGS MATERIAL NEW	CEILINGS HGT. EXIST.	CEILINGS HGT. NEW	REMARKS
A113	OFFICE	VT-1	—	RB	—	PPT	—	PPT	—	PPT	—	PPT	—	ASP	AT-1	8'-0"	8'-0"	
A114	VESTIBULE	VT-1	—	RB	—	PPT	—	PPT	—	PPT	—	PPT	—	ASP	AT-1	8'-0"	8'-0"	
A117	TRAUMA ROOM	CT	—	CT	—	PPT	—	PPT	—	PPT	—	PPT	—	PPT	AT-1	8'-6"	8'-6"	
A118	VESTIBULE	VT-1	—	RB	—	PVF	—	PVF	—	PVF	—	PVF	—	AT-1	AT-1	8'-0"	8'-0"	NOTE #1
A119	EXAM	VT-1	—	RB	—	PPT	—	PPT	—	PPT	—	PPT	—	AT-1	AT-1	8'-0"	8'-0"	NOTE #1
A120	DR'S OFFICE	VT-1	—	RB	—	PPT	—	PPT	—	PPT	—	PPT	—	ASP	AT-1	8'-0"	8'-0"	
A122	DINING MED. OFFICE	VT-1	—	RB	—	PPT	—	PPT	—	PPT	—	PPT	—	ASP	AT-1	8'-6"	8'-6"	
A124	DR'S OFFICE	VT-1	—	RB	—	PPT	—	PPT	—	PPT	—	PPT	—	ASP	AT-1	8'-0"	8'-0"	
A125	DR'S OFFICE	VT-1	—	RB	—	PPT	—	PPT	—	PPT	—	PPT	—	ASP	AT-1	8'-6"	8'-6"	
A126	MEDICAL OFFICER	VT-1	—	RB	—	PPT	—	PPT	—	PPT	—	PPT	—	ASP	AT-1	8'-6"	8'-6"	
A127	EXAM	VT-1	—	RB	—	PPT	—	PPT	—	PPT	—	PPT	—	ASP	AT-1	8'-0"	8'-0"	
A128	EXAM	CT	—	CT	—	PPT	—	PPT	—	PPT	—	PPT	—	PPT	AT-1	8'-0"	8'-0"	
A129	DR'S OFFICE	VT-1	—	RB	—	PPT	—	PPT	—	PPT	—	PPT	—	ASP	AT-1	8'-6"	8'-6"	
A130	TRIAGE OFFICE	VT-1	—	RB	—	PPT	—	PPT	—	PPT	—	PPT	—	ASP	AT-1	8'-6"	8'-6"	
A131	DR'S OFFICE	VT-1	—	RB	—	PPT	—	PPT	—	PPT	—	PPT	—	ASP	AT-1	8'-6"	8'-6"	
A132	TREATMENT	CT	—	CT	—	PPT	—	PPT	—	PPT	—	PPT	—	PPT	AT-1	8'-0"	8'-0"	
A134	LPO OFFICE	CT	—	CT	—	PPT	—	PPT	—	PPT	—	PPT	—	PPT	AT-1	8'-0"	8'-0"	
A136	EXAM	VT-1	—	RB	—	PPT	—	PPT	—	PPT	—	PPT	—	ASP	AT-1	8'-6"	8'-6"	
A137	DR'S OFFICE	VT-1	—	RB	—	PPT	—	PPT	—	PPT	—	PPT	—	ASP	AT-1	8'-6"	8'-6"	
A138	WORK ROOM	CT	—	CT	—	PLG	—	PLG	—	PLG	—	PLG	—	PPT	AT-1	8'-0"	8'-0"	
A139	OFFICE	VT-1	—	RB	—	PPT	—	PPT	—	PPT	—	PPT	—	ASP	AT-1	8'-0"	8'-0"	
A140	EXAM	VT-1	—	RB	—	PPT	—	PPT	—	PPT	—	PPT	—	AT-1	AT-1	8'-6"	8'-6"	NOTE #1
A141	DR'S OFFICE	VT-1	—	RB	—	PPT	—	PPT	—	PPT	—	PPT	—	ASP	AT-1	8'-6"	8'-6"	
A142	DR'S OFFICE	VT-1	—	RB	—	PPT	—	PPT	—	PPT	—	PPT	—	ASP	AT-1	8'-0"	8'-0"	
A143	EXAM	VT-1	—	RB	—	PPT	—	PPT	—	PPT	—	PPT	—	ASP	AT-1	8'-6"	8'-6"	
A144	EXAM	VT-1	—	RB	—	PPT	—	PPT	—	PPT	—	PPT	—	ASP	AT-1	8'-0"	8'-0"	
A145	WORK ROOM	VT-1	—	RB	—	PPT	—	PPT	—	PPT	—	PPT	—	PPT	AT-1	8'-0"	8'-0"	
A146	CHECK-IN	VT-1	—	RB	—	PPT	—	PPT	—	PPT	—	PPT	—	ASP	AT-1	8'-0"	8'-0"	
A147	DR'S OFFICE	VT-1	—	RB	SPM	PPT	—	PPT	SPT	PPT	—	PPT	—	ASP	AT-1	8'-6"	8'-6"	
A148	DIV. OFFICE	VT-1	—	RB	SPM	PPT	—	PPT	—	PPT	—	PPT	SPT	ASP	AT-1	8'-6"	8'-6"	
A149	DR'S OFFICE	VT-1	—	RB	—	PPT	—	PPT	—	PPT	—	PPT	—	ASP	AT-1	8'-6"	8'-6"	
A150	WORK ROOM	CT	—	CT	—	PLG	—	PLG	—	PLG	—	PLG	—	PPT	AT-1	8'-0"	8'-0"	
A151	EXAM	VT-1	—	RB	—	PPT	—	PPT	—	PPT	—	PPT	—	ASP	AT-1	8'-0"	8'-0"	
A152	WEIGHTS & MEASURES	VT-1	—	RB	—	PPT	—	PPT	—	PPT	—	PPT	—	PPT	AT-1	8'-6"	8'-6"	
A153	OFFICE	VT-1	—	RB	—	PPT	—	PPT	—	PPT	—	PPT	—	ASP	AT-1	8'-6"	8'-6"	
A155	EXERCISE	VT-1	—	RB	—	PPT	—	PPT	—	PPT	—	PPT	—	ASP	AT-1	8'-6"	8'-6"	
A155A	TREATMENT	VT-1	—	RB	—	PPT	—	PPT	—	PPT	—	PPT	—	ASP	AT-1	8'-6"	8'-6"	
A155B	TREATMENT	VT-1	—	RB	—	PPT	—	PPT	—	PPT	—	PPT	—	ASP	AT-1	8'-6"	8'-6"	
A155C	WHIRLPOOL	CT	—	CT	—	PPT	—	PPT	—	PPT	—	PPT	—	PPT	AT-2	8'-0"	8'-0"	
A157	DR'S OFFICE	VT-1	—	RB	—	PPT	—	PPT	—	PPT	—	PPT	—	ASP	AT-1	8'-6"	8'-6"	
A158	TREATMENT	VT-1	—	RB	—	PPT	—	PPT	—	PPT	—	PPT	—	ASP	AT-1	8'-6"	8'-6"	
A159	TREATMENT	VT-1	—	RB	—	PPT	—	PPT	—	PPT	—	PPT	—	ASP	AT-1	8'-0"	8'-0"	
A160	P.T. STORAGE/ LOCKER ROOM	VT-1	—	RB	—	PPT	—	PPT	—	PPT	—	PPT	—	ASP	AT-1	8'-0"	8'-0"	
A161	DR'S OFFICE	VT-1	—	RB	—	PPT	—	PPT	—	PPT	—	PPT	—	ASP	AT-1	8'-0"	8'-0"	
A162	DR'S OFFICE	VT-1	—	RB	—	PPT	—	PPT	—	PPT	—	PPT	—	ASP	AT-1	8'-6"	8'-6"	
A163	DR'S OFFICE	VT-1	—	RB	—	PPT	—	PPT	—	PPT	—	PPT	—	ASP	AT-1	8'-6"	8'-6"	

FINISH LEGEND

AT-A	ACOUSTICAL TILE CEILING (EXISTING 2X4)
AT-1	ACOUSTICAL TILE CEILING (2X2 STANDARD FINISH)
AT-2	ACOUSTICAL TILE CEILING (2X2 WATER PROOF FINISH)
ASP	ACOUSTICAL CONCEALED SPLINE CEILING
MSP	METAL CONCEALED SPLINE CEILING
PPT	PLASTER PAINTED
PSP	PLASTER SPRAYED TEXTURED FINISH
PLG	PLASTER LIQUID GLAZED COATING
GPT	GYPSUM WALL BOARD PAINTED
GLG	GYPSUM WALL BOARD LIQUID GLAZED COATING
CPT	CONCRETE PAINTED
CCS	CONCRETE WITH CONCRETE SEALER
CT	CERAMIC TILE
PVF	PLASTER WITH VINYL WALL FABRIC
GVF	GYPSUM WALL BOARD W/ VINYL WALL FABRIC
QT	QUARRY TILE
CP	CARPET
VT-1	VINYL ASBESTOS TILE
VT-2	VINYL COMPOSITION TILE
SV	SHEET VINYL
EP	EPOXY TERRAZZO
SPCF	CONDUCTIVE FLOORING
SPT	PATCH & PAINT TO MATCH EXISTING
SPM	PATCH TO MATCH EXISTING
SPW	PLYWOOD PANELING
RB	RESILIENT BASE
EXP	EXPOSED STRUCTURE

NOTE #1 REMOVE EXISTING LAY-IN ACOUSTICAL CEILING SYSTEM TO EXTENT REQUIRED TO ACCOMPLISH WORK ABOVE CEILING. (STORE MATERIALS AND RE-INSTALL EXISTING CEILING SYSTEM)

SEAL AREA

EXC. DV. DRG. — DATE — SATISFACTORY TO — DATE — DESIGN BY: RAS — DRAWN BY: FLT

DATE	REVISION DESCRIPTION

SHERLOCK, SMITH & ADAMS, INC.
ARCHITECTS – ENGINEERS
MONTGOMERY, ALABAMA

U.S. NAVAL STATION ROOSEVELT ROADS, P.R.
REPAIRS TO NAVAL HOSPITAL
FINISH SCHEDULE

CONSTR. CONTR. NO. | SPECIFICATION NO. | NAVFAC DRWG. NO. | TF NO. | SHEET ? OF ??

NAVAL FACILITIES ENGINEERING COMMAND
DEPARTMENT OF THE NAVY
NAVY PUBLIC WORKS CENTER, JACKSONVILLE, FL
U.S. NAVAL STATION ROOSEVELT ROADS, P.R.
REPAIRS TO NAVAL HOSPITAL
FINISH SCHEDULE

PWC DWG. NO. | NAVFAC DWG. NO. | CONSTR. CONTR. NO.

PLATE NO. A3-3

FINISH SCHEDULE

ROOM NO.	ROOM NAME	FLOOR EXIST.	FLOOR NEW	BASE EXIST.	BASE NEW	WALLS NORTH EXIST.	WALLS NORTH NEW	WALLS EAST EXIST.	WALLS EAST NEW	WALLS SOUTH EXIST.	WALLS SOUTH NEW	WALLS WEST EXIST.	WALLS WEST NEW	CEILINGS MATERIAL EXIST.	CEILINGS MATERIAL NEW	CEILINGS HGT. EXIST.	CEILINGS HGT. NEW	REMARKS
A164	TREATMENT	CT	—	CT	—	PPT	—	PPT	—	PPT	—	PPT	—	ASP	AT-1	8'-0"	8'-0"	
A165	CAST ROOM	CT	—	CT	—	PPT	—	PPT	—	PPT	—	PPT	—	PPT	AT-1	8'-0"	8'-0"	
A166	STORAGE	CT	—	CT	—	PPT	—	PPT	—	PPT	—	PPT	—	PPT	AT-1	8'-0"	8'-0"	
A167	EXAM	VT-1	—	RB	—	PPT	—	PPT	—	PPT	—	PPT	—	ASP	AT-1	8'-6"	8'-6"	
A168	DIV. OFFICE	VT-1	—	RB	—	PPT	—	PPT	—	PPT	—	PPT	—	ASP	AT-1	8'-6"	8'-6"	
A169	MINOR SURGERY	VT-1	—	RB	—	PPT	—	PPT	—	PPT	—	PPT	—	ASP	AT-1	8'-0"	8'-0"	
A172	SOIL	CT	—	CT	—	PPT	—	PPT	—	PPT	—	PPT	—	PPT	AT-2	8'-0"	8'-0"	
A173	PROCTO	VT-1	—	RB	—	PPT	—	PPT	—	PPT	—	PPT	—	ASP	AT-1	8'-0"	8'-0"	
A174	DR'S OFFICE	VT-1	—	RB	—	PPT	—	PPT	—	PPT	—	PPT	—	ASP	AT-1	8'-6"	8'-6"	
A175	OUTPATIENT NURSING	VT-1	—	RB	—	PPT	—	PPT	—	PPT	—	PPT	—	ASP	AT-1	8'-6"	8'-6"	
B101	CORRIDOR	VT-1	—	RB	SPM	PVF	—	PVF	—	PVF	SPT	PVF	—	AT-A	AT-1	8'-0"	8'-0"	
B101A	WAITING	VT-1	—	RB	—	PVF	—	PVF	—	PVF	—	PVF	—	AT-A	AT-1	8'-6"	8'-6"	
B102	CORRIDOR	VT-1	—	RB	—	PVF	—	PVF	—	PVF	—	PVF	—	AT-A	AT-1	8'-0"	8'-0"	
B102A	WAITING	VT-1	—	RB	—	PVF	—	PVF	—	PVF	—	PVF	—	AT-A	AT-1	8'-6"	8'-6"	
B102B	CONTROL	VT-1	—	RB	—	PVF	—	PVF	—	PVF	—	PVF	—	AT-A	AT-1	8'-6"	8'-6"	
B102C	PATIENT HOLDING	VT-1	—	RB	—	PVF	—	PVF	—	PVF	—	PVF	—	AT-A	AT-1	8'-6"	8'-6"	
B102D	BARIUM	VT-1	—	RB	—	PVF	—	PVF	—	PVF	—	PVF	—	AT-A	AT-1	8'-0"	8'-0"	
B103	CONTROL	VT-1	—	RB	—	PVF	—	PVF	—	PVF	—	PVF	—	ASP	AT-1	8'-6"	8'-6"	
B104	WAITING	VT-1	—	RB	—	PVF	—	PVF	—	PVF	—	PVF	—	ASP	AT-1	8'-0"	8'-0"	
B105	STAFF LOUNGE	VT-1	—	RB	—	PPT	—	PPT	—	PPT	—	PPT	—	ASP	AT-1	8'-0"	8'-0"	
B109	PASSAGE	VT-1	—	RB	—	PVF	—	PVF	—	PVF	—	PVF	—	AT-A	AT-1	8'-0"	8'-0"	
B110	DONOR ROOM	VT-1	—	RB	—	PPT	—	PPT	—	PPT	—	PPT	—	ASP	AT-1	8'-0"	8'-0"	
B112	TECH. WORK	VT-1	—	RB	—	PPT	—	PPT	—	PPT	—	PPT	—	ASP	AT-1	8'-0"	8'-0"	
B113	MICRO-BIOLOGY	CT	—	CT	—	PPT	—	PPT	—	PPT	—	PPT	—	PPT	AT-2	8'-6"	8'-6"	
B114	EMERGENCY SHOWER	CT	—	CT	—	PLG	—	PLG	—	PLG	—	PLG	—	PPT	AT-2	8'-0"	8'-0"	
B115	BLOOD BANK	VT-1	—	RB	—	PPT	—	PPT	—	PPT	—	PPT	—	ASP	AT-1	8'-0"	8'-0"	
B116	HEMATOLOGY	CT	—	CT	—	PPT	—	PPT	—	PPT	—	PPT	—	PPT	AT-2	8'-6"	8'-6"	
B117	HYSTO/CYTO	CT	—	CT	—	PPT	—	PPT	—	PPT	—	PPT	—	PPT	AT-2	8'-6"	8'-6"	
B118	STORAGE	CT	—	CT	—	PPT	—	PPT	—	PPT	—	PPT	—	PPT	AT-1	8'-6"	8'-6"	
B120	PATHOLOGIST	VT-1	—	RB	—	PPT	—	PPT	—	PPT	—	PPT	—	ASP	AT-1	8'-6"	8'-6"	
B121	OFFICE	VT-1	—	RB	—	PPT	—	PPT	—	PPT	—	PPT	—	ASP	AT-1	8'-6"	8'-6"	
B122	LABORATORY	VT-1	—	RB	—	PPT	—	PPT	—	PPT	—	PPT	—	ASP	AT-1	8'-0"	8'-0"	
B123	STORAGE	VT-1	—	RB	—	PPT	—	PPT	—	PPT	—	PPT	—	PPT	AT-1	8'-0"	8'-0"	
B126	ULTRA SOUND ADMIN.	VT-1	—	RB	—	PPT	—	PPT	—	PPT	—	PPT	—	ASP	AT-1	8'-6"	8'-6"	
B127	ULTRA SOUND	VT-1	—	RB	—	PPT	—	PPT	—	PPT	—	PPT	—	ASP	AT-1	8'-6"	8'-6"	
B129	STORAGE	VT-1	—	RB	—	PPT	—	PPT	—	PPT	—	PPT	—	ASP	AT-1	8'-0"	8'-0"	
B130	MAMMO	VT-1	—	RB	—	PPT	—	PPT	—	PPT	—	PPT	—	ASP	AT-1	8'-0"	8'-0"	
B132	X-RAY #1	VT-1	—	RB	—	PPT	—	PPT	—	PPT	—	PPT	—	ASP	AT-1	9'-0"	9'-0"	
B132A	CONTROL	VT-1	—	RB	—	PPT	—	PPT	—	PPT	—	PPT	—	ASP	AT-1	9'-0"	9'-0"	
B134	X-RAY #2	VT-1	—	RB	—	PPT	—	PPT	—	PPT	—	PPT	—	AT-A	AT-1	9'-0"	9'-0"	
B134A	CONTROL	VT-1	—	RB	—	PPT	—	PPT	—	PPT	—	PPT	—	AT-A	AT-1	9'-0"	9'-0"	
B135	X-RAY #3	VT-1	—	RB	—	PPT	—	PPT	—	PPT	—	PPT	—	AT-A	AT-1	9'-0"	9'-0"	
B136	PANOGRAPHIC UNIT	VT-1	—	RB	—	PPT	—	PPT	—	PPT	—	PPT	—	ASP	AT-1	8'-6"	8'-6"	
B139	DARKROOM	CT	—	CT	—	PLG	—	PLG	—	PLG	—	PLG	—	ASP	AT-2	8'-0"	8'-0"	
B140	FILM FILE-CUT-SORT-CAT	VT-1	—	RB	—	PPT	—	PPT	—	PPT	—	PPT	—	ASP	AT-1	8'-6"	8'-6"	
B141	WORK ROOM	VT-1	—	RB	—	PPT	—	PPT	—	PPT	—	PPT	—	ASP	AT-1	8'-0"	8'-0"	

FINISH LEGEND

AT-A	ACOUSTICAL TILE CEILING (EXISTING 2X4)
AT-1	ACOUSTICAL TILE CEILING (2X2 STANDARD FINISH)
AT-2	ACOUSTICAL TILE CEILING (2X2 WATER PROOF FINISH)
ASP	ACOUSTICAL CONCEALED SPLINE CEILING
MSP	METAL CONCEALED SPLINE CEILING
PPT	PLASTER PAINTED
PSP	PLASTER SPRAYED TEXTURED FINISH
PLG	PLASTER LIQUID GLAZED COATING
GPT	GYPSUM WALL BOARD PAINTED
GLG	GYPSUM WALL BOARD LIQUID GLAZED COATING
CPT	CONCRETE PAINTED
CCS	CONCRETE WITH CONCRETE SEALER
CT	CERAMIC TILE
PVF	PLASTER WITH VINYL WALL FABRIC
GVF	GYPSUM WALL BOARD W/ VINYL WALL FABRIC
QT	QUARRY TILE
CP	CARPET
VT-1	VINYL ASBESTOS TILE
VT-2	VINYL COMPOSITION TILE
SV	SHEET VINYL
EP	EPOXY TERRAZZO
SPCF	CONDUCTIVE FLOORING
SPT	PATCH & PAINT TO MATCH EXISTING
SPM	PATCH TO MATCH EXISTING
SPW	PLYWOOD PANELING
RB	RESILIENT BASE
EXP	EXPOSED STRUCTURE

NOTE #1 REMOVE EXISTING LAY-IN ACOUSTICAL CEILING SYSTEM TO EXTENT REQUIRED TO ACCOMPLISH WORK ABOVE CEILING. (STORE MATERIALS AND RE-INSTALL EXISTING CEILING SYSTEM)

SEAL AREA

DIV. OR DIR.: DATE: SATISFACTORY TO: DATE:

DESIGN BY: RAS DRAWN BY: FLT
CHK BY: RAS APPROVED:

DATE	REVISION DESCRIPTION

SHERLOCK, SMITH & ADAMS, INC.
ARCHITECTS – ENGINEERS
MONTGOMERY, ALABAMA

DEPARTMENT OF THE NAVY — NAVAL FACILITIES ENGINEERING COMMAND
NAVY PUBLIC WORKS CENTER, JACKSONVILLE, FL
U.S. NAVAL STATION ROOSEVELT ROADS, P.R.
REPAIRS TO NAVAL HOSPITAL
FINISH SCHEDULE

CONSTR. CONTR. NO. | NAVFAC DWG. NO. | TPC DWG. NO.

U.S. NAVAL STATION ROOSEVELT ROADS, P.R.
REPAIRS TO NAVAL HOSPITAL
FINISH SCHEDULE

CONSTR. CONTR. NO. | SPECIFICATION NO. | NAVFAC DWG. NO. | TP NO. | SHEET ? OF ??

PLATE NO. A3-4

FINISH SCHEDULE

ROOM NO.	ROOM NAME	FLOOR EXIST.	FLOOR NEW	BASE EXIST.	BASE NEW	WALLS NORTH EXIST.	WALLS NORTH NEW	WALLS EAST EXIST.	WALLS EAST NEW	WALLS SOUTH EXIST.	WALLS SOUTH NEW	WALLS WEST EXIST.	WALLS WEST NEW	CEILINGS MATERIAL EXIST.	CEILINGS MATERIAL NEW	CEILINGS HGT. EXIST.	CEILINGS HGT. NEW	REMARKS
B142	SECRETARY	VT-1	—	RB	—	PPT	—	PPT	—	PPT	—	PPT	—	ASP	AT-1	8'-0"	8'-0"	
B142A	OFFICE	VT-1	—	RB	—	PPT	—	PPT	—	PPT	—	PPT	—	ASP	AT-1	8'-6"	8'-6"	
B144	DUTY BEDROOM	VT-1	—	RB	—	PPT	—	PPT	—	PPT	—	PPT	—	ASP	AT-1	8'-0"	8'-0"	
B146	CHIEF OF RADIOLOGY	VT-1	—	RB	—	PPT	—	PPT	—	PPT	—	PPT	—	ASP	AT-1	8'-6"	8'-6"	
B150	EXAM	VT-1	—	RB	—	PPT	—	PPT	—	PPT	—	PPT	—	ASP	AT-1	8'-6"	8'-6"	
B151	DR'S OFFICE	VT-1	—	RB	—	PPT	—	PPT	—	PPT	—	PPT	—	AT-1	AT-1	8'-6"	8'-6"	NOTE #1
B152	LAB	CT	—	CT	—	PLG	—	PLG	—	PLG	—	PLG	—	AT-1	AT-1	8'-0"	8'-0"	NOTE #1
B153	LPO OFFICE	CT	—	CT	—	PLG	—	PLG	—	PLG	—	PLG	—	AT-1	AT-1	8'-0"	8'-0"	NOTE #1
B156	STERILE WORK ROOM	SPCF	—	SPCF	—	PLG	—	PLG	—	PLG	—	PLG	—	PPT	AT-2	8'-6"	8'-6"	
B157	CYSTO	SPCF	—	SPCF	—	PLG	—	PLG	—	PLG	—	PLG	—	PPT	AT-2	8'-6"	8'-6"	
B157A	CONTROL	SPCF	—	SPCF	—	PLG	—	PLG	—	PLG	—	PLG	—	PPT	AT-2	8'-0"	8'-0"	
B161	PHARMACY	VT-1	—	RB	—	PPT	—	PPT	—	PPT	—	PPT	—	ASP	AT-1	8'-6"	8'-6"	
B163	CHIEF OF PHARMACY	VT-1	—	RB	—	PPT	—	PPT	—	PPT	—	PPT	—	ASP	AT-1	8'-6"	8'-6"	
B164	PHARMACY ISSUE	VT-1	—	RB	SPM	PPT	—	PPT	—	PPT	—	PPT	SPT	ASP	AT-1	8'-6"	8'-6"	
B165	REFILLS	VT-1	—	RB	SPM	PPT	—	PPT	—	PPT	—	PPT	SPT	ASP	AT-1	8'-0"	8'-0"	
B166	PHARMACY	VT-1	—	RB	SPM	PPT	SPT	PPT	SPT	PPT	—	PPT	SPT	ASP	AT-1	8'-0"	8'-0"	
B167	STORAGE/LOCKERS	VT-1	—	RB	SPM	PPT	SPT	PPT	—	PPT	SPT	PPT	—	ASP	AT-1	8'-0"	8'-0"	
C101	CORRIDOR	VT-1	—	RB	—	PVF	—	PVF	—	PVF	—	PVF	—	AT-A	AT-1	8'-0"	8'-0"	
C102	CORRIDOR	VT-1	—	RB	—	PVF	—	PVF	—	PVF	—	PVF	—	AT-A	AT-1	8'-0"	8'-0"	
C102A	VENDING	VT-1	—	RB	—	PVF	—	PVF	—	PVF	—	PVF	—	AT-A	AT-1	8'-0"	8'-0"	
C102B	CONTROL	VT-1	—	RB	—	PVF	—	PVF	—	PVF	—	PVF	—	AT-A	AT-1	8'-0"	8'-0"	
C102C	OB/GYN WAITING	VT-1	—	RB	—	PVF	—	PVF	—	PVF	—	PVF	—	AT-A	AT-1	8'-0"	8'-0"	
C103	CORRIDOR	VT-1	—	RB	—	PVF	—	PVF	—	PVF	—	PVF	—	AT-A	AT-1	8'-0"	8'-0"	
C104	CORRIDOR	VT-1	—	RB	—	PVF	—	PVF	—	PVF	—	PVF	—	AT-A	AT-1	8'-0"	8'-0"	
C104A	WAITING	VT-1	—	RB	—	PVF	—	PVF	—	PVF	—	PVF	—	AT-A	AT-1	8'-0"	8'-0"	
C104B	CONTROL	VT-1	—	RB	—	PVF	—	PVF	—	PVF	—	PVF	—	AT-A	AT-1	8'-0"	8'-0"	
C105	CORRIDOR	VT-1	—	RB	—	PVF	—	PVF	—	PVF	—	PVF	—	AT-A	AT-1	8'-0"	8'-0"	
C108	EXAM	VT-1	—	RB	—	PPT	—	PPT	—	PPT	—	PPT	—	ASP	AT-1	8'-6"	8'-6"	
C109	NUTRITION CLINIC	VT-1	—	RB	—	PPT	—	PPT	—	PPT	—	PPT	—	ASP	AT-1	8'-0"	8'-0"	
C110	CHIEF OF SERVICE	VT-1	—	RB	—	PPT	—	PPT	—	PPT	—	PPT	—	ASP	AT-1	8'-6"	8'-6"	
C111	DR'S OFFICE	VT-1	—	RB	—	PPT	—	PPT	—	PPT	—	PPT	—	ASP	AT-1	8'-0"	8'-0"	
C112	EXAM	VT-1	—	RB	—	PPT	—	PPT	—	PPT	—	PPT	—	ASP	AT-1	8'-6"	8'-6"	
C113	OFFICE	VT-1	—	RB	—	PPT	—	PPT	—	PPT	—	PPT	—	ASP	AT-1	8'-0"	8'-0"	
C114	OFFICE	VT-1	—	RB	—	PPT	—	PPT	—	PPT	—	PPT	—	ASP	AT-1	8'-6"	8'-6"	
C115	EKG	CT	—	CT	—	PPT	—	PPT	—	PPT	—	PPT	—	PPT	AT-1	8'-0"	8'-0"	
C116	STORAGE	CT	—	CT	—	PLG	—	PLG	—	PLG	—	PLG	—	PPT	AT-1	8'-6"	8'-6"	
C119	OFFICE	VT-1	—	RB	—	PPT	—	PPT	—	PPT	—	PPT	—	ASP	AT-1	8'-0"	8'-0"	
C121	AUDIOLOGIST	VT-1	—	RB	—	PPT	—	PPT	—	PPT	—	PPT	—	ASP	AT-1	8'-0"	8'-0"	
C122	EXAM	VT-1	—	RB	—	PPT	—	PPT	—	PPT	—	PPT	—	PPT	AT-1	8'-6"	8'-6"	
C123	AUDIO TESTING	VT-1	—	RB	—	PPT	—	PPT	—	PPT	—	PPT	—	ASP	AT-1	8'-0"	8'-0"	
C124	DR'S OFFICE	VT-1	—	RB	—	PPT	—	PPT	—	PPT	—	PPT	—	ASP	AT-1	8'-6"	8'-6"	
C125	OCCUP. HEALTH OFFICE	VT-1	—	RB	—	PPT	—	PPT	—	PPT	—	PPT	—	ASP	AT-1	8'-6"	8'-6"	
C126	OFFICE	VT-1	—	RB	—	PPT	—	PPT	—	PPT	—	PPT	—	ASP	AT-1	8'-6"	8'-6"	
C127	PHYSICAL EXAM	VT-1	—	RB	—	PPT	—	PPT	—	PPT	—	PPT	—	ASP	AT-1	8'-0"	8'-0"	
C130	EYE EXAM	VT-1	—	RB	—	PPT	—	PPT	—	PPT	—	PPT	—	ASP	AT-1	8'-0"	8'-0"	
C131	WEIGHTS & MEASURES/ EKG EXAM	VT-1	—	RB	—	PPT	—	PPT	—	PPT	—	PPT	—	ASP	AT-1	8'-0"	8'-0"	

FINISH LEGEND

AT-A	ACOUSTICAL TILE CEILING (EXISTING 2X4)
AT-1	ACOUSTICAL TILE CEILING (2X2 STANDARD FINISH)
AT-2	ACOUSTICAL TILE CEILING (2X2 WATER PROOF FINISH)
ASP	ACOUSTICAL CONCEALED SPLINE CEILING
MSP	METAL CONCEALED SPLINE CEILING
PPT	PLASTER PAINTED
PSP	PLASTER SPRAYED TEXTURED FINISH
PLG	PLASTER LIQUID GLAZED COATING
GPT	GYPSUM WALL BOARD PAINTED
GLG	GYPSUM WALL BOARD LIQUID GLAZED COATING
CPT	CONCRETE PAINTED
CCS	CONCRETE WITH CONCRETE SEALER
CT	CERAMIC TILE
PVF	PLASTER WITH VINYL WALL FABRIC
GVF	GYPSUM WALL BOARD W/ VINYL WALL FABRIC
QT	QUARRY TILE
CP	CARPET
VT-1	VINYL ASBESTOS TILE
VT-2	VINYL COMPOSITION TILE
SV	SHEET VINYL
EP	EPOXY TERRAZZO
SPCF	CONDUCTIVE FLOORING
SPT	PATCH & PAINT TO MATCH EXISTING
SPM	PATCH TO MATCH EXISTING
SPW	PLYWOOD PANELING
RB	RESILIENT BASE
EXP	EXPOSED STRUCTURE

NOTE #1 REMOVE EXISTING LAY-IN ACOUSTICAL CEILING SYSTEM TO EXTENT REQUIRED TO ACCOMPLISH WORK ABOVE CEILING. (STORE MATERIALS AND RE-INSTALL EXISTING CEILING SYSTEM)

SEAL AREA

DWG. DW. DR.: DATE: SATISFACTORY TO: DATE:

DESIGN BY: RAS DRAWN BY: FLT
CHK. BY: DJC APPROVED:

DATE	REVISION DESCRIPTION

NAVAL FACILITIES ENGINEERING COMMAND
DEPARTMENT OF THE NAVY
NAVY PUBLIC WORKS CENTER, JACKSONVILLE, FL
U.S. NAVAL STATION ROOSEVELT ROADS, P.R.
REPAIRS TO NAVAL HOSPITAL
FINISH SCHEDULE

PWC DWG. NO. NAVFAC DWG. NO. CONTR. CONTR. NO.

SHERLOCK, SMITH & ADAMS, INC.
ARCHITECTS – ENGINEERS
MONTGOMERY, ALABAMA

U.S. NAVAL STATION ROOSEVELT ROADS, P.R.
REPAIRS TO NAVAL HOSPITAL
FINISH SCHEDULE

CONSTR. CONTR. NO. | SPECIFICATION NO. | NAVFAC DRWG. NO. | TF NO. | SHEET ? OF ??

PLATE NO.
A3-5

FINISH SCHEDULE

ROOM NO.	ROOM NAME	FLOOR EXIST.	FLOOR NEW	BASE EXIST.	BASE NEW	WALLS NORTH EXIST.	WALLS NORTH NEW	WALLS EAST EXIST.	WALLS EAST NEW	WALLS SOUTH EXIST.	WALLS SOUTH NEW	WALLS WEST EXIST.	WALLS WEST NEW	CEILINGS MATERIAL EXIST.	CEILINGS MATERIAL NEW	CEILINGS HGT. EXIST.	CEILINGS HGT. NEW	REMARKS
C132	OFFICE	VT-1	—	RB	—	PPT	—	PPT	—	PPT	—	PPT	—	ASP	AT-1	8'-6"	8'-6"	
C133	FLEET LIAISON	VT-1	—	RB	—	PPT	—	PPT	—	PPT	—	PPT	—	ASP	AT-1	8'-6"	8'-6"	
C134	DEPT. HEAD	VT-1	—	RB	—	PPT	—	PPT	—	PPT	—	PPT	—	ASP	AT-1	8'-6"	8'-6"	
C134A	WAITING	VT-1	—	RB	—	PPT	—	PPT	—	PPT	—	PPT	—	ASP	AT-1	8'-6"	8'-6"	
C135	EARLY INTERVIEW	VT-1	—	RB	—	PVF	—	PVF	—	PVF	—	PVF	—	ASP	AT-1	8'-6"	8'-6"	
C137	CARRIER COUNSELOR	VT-1	—	RB	—	PPT	—	PPT	—	PPT	—	PPT	—	ASP	AT-1	8'-0"	8'-0"	
C139	EYE LANE	VT-1	—	RB	—	PPT	—	PPT	—	PPT	—	PPT	—	ASP	AT-1	8'-0"	8'-0"	
C140	SOIL	CT	—	CT	—	PPT	—	PPT	—	PPT	—	PPT	—	PPT	AT-2	8'-0"	8'-0"	
C143	OFFICE	VT-1	—	RB	—	PPT	—	PPT	—	PPT	—	PPT	—	ASP	AT-1	8'-6"	8'-6"	
C144	VISUAL FIELD	CT	—	CT	—	PPT	—	PPT	—	PPT	—	PPT	—	PPT	AT-1	8'-0"	8'-0"	
C145	MINOR PROCED.	VT-1	—	RB	—	PPT	—	PPT	—	PPT	—	PPT	—	ASP	AT-1	8'-0"	8'-0"	
C147	EYE EXAM	CT	—	CT	—	PPT	—	PPT	—	PPT	—	PPT	—	ASP	AT-1	8'-0"	8'-0"	
C148	PASSAGE	VT-1	—	RB	—	PVF	—	PVF	—	PVF	—	PVF	—	AT-A	AT-1	8'-0"	8'-0"	
C149	OFFICE	CT	—	CT	—	PPT	—	PPT	—	PPT	—	PPT	—	PPT	AT-1	8'-6"	8'-6"	
C150	OFFICE	CT	—	CT	—	PPT	—	PPT	—	PPT	—	PPT	—	PPT	AT-1	8'-6"	8'-6"	
C151	OCULAR PHOTOGRAPHY	CT	—	CT	—	PPT	—	PPT	—	PPT	—	PPT	—	ASP	AT-1	8'-0"	8'-0"	
C153	DR'S OFFICE	VT-1	—	RB	—	PPT	—	PPT	—	PPT	—	PPT	—	ASP	AT-1	8'-6"	8'-6"	
C154	FITTING	VT-1	—	RB	—	PPT	—	PPT	—	PPT	—	PPT	—	ASP	AT-1	8'-0"	8'-0"	
C156	EXAM	VT-1	—	RB	—	PPT	—	PPT	—	PPT	—	PPT	—	ASP	AT-1	8'-0"	8'-0"	
C157	EXAM	VT-1	—	RB	—	PPT	—	PPT	—	PPT	—	PPT	—	ASP	AT-1	8'-6"	8'-6"	
C158	DISASTER PREP.	VT-1	—	RB	—	PPT	—	PPT	—	PPT	—	PPT	—	ASP	AT-1	8'-0"	8'-0"	
C159	DR'S OFFICE	VT-1	—	RB	—	PPT	—	PPT	—	PPT	—	PPT	—	ASP	AT-1	8'-6"	8'-6"	
C160	EXAM	VT-1	—	RB	—	PPT	—	PPT	—	PPT	—	PPT	—	ASP	AT-1	8'-6"	8'-6"	
C161	EXAM	VT-1	—	RB	—	PPT	—	PPT	—	PPT	—	PPT	—	AT-1	AT-1	8'-6"	8'-6"	NOTE #1
C162	STORAGE	CT	—	CT	—	PLG	—	PLG	—	PLG	—	PLG	—	AT-1	AT-1	8'-0"	8'-0"	NOTE #1
C163	EXAM	VT-1	—	RB	—	PPT	—	PPT	—	PPT	—	PPT	—	AT-1	AT-1	8'-6"	8'-6"	NOTE #1
C164	IMMUN. CLINIC	CT	—	CT	—	PPT	—	PPT	—	PPT	—	PPT	—	PPT	AT-1	8'-0"	8'-0"	
C165	PED. LEAD PREV. PROG.	VT-1	—	RB	—	PPT	—	PPT	—	PPT	—	PPT	—	ASP	AT-1	8'-6"	8'-6"	
C166	TEMP./WGT. MEASURE	VT-1	—	RB	—	PPT	—	PPT	—	PPT	—	PPT	—	ASP	AT-1	8'-0"	8'-0"	
C167	OFFICE	VT-1	—	RB	—	PPT	—	PPT	—	PPT	—	PPT	—	ASP	AT-1	8'-6"	8'-6"	
C169	TREATMENT	VT-1	—	RB	—	PPT	—	PPT	—	PPT	—	PPT	—	ASP	AT-1	8'-6"	8'-6"	
C173	CONTROL	VT-1	—	RB	—	PPT	—	PPT	—	PPT	—	PPT	—	ASP	AT-1	8'-6"	8'-6"	
C174	WAITING	VT-1	—	RB	—	PPT	—	PPT	—	PPT	—	PPT	—	ASP	AT-1	8'-6"	8'-6"	
D101	OPP. LOBBY & WAITING	EP	—	EP	—	PVF	—	PVF	—	PVF	—	PVF	—	PPT	AT-1	8'-6"	8'-6"	
D101A	CORRIDOR	EP	—	EP	—	PVF	—	PVF	—	PVF	—	PVF	—	AT-1	AT-1	8'-0"	8'-0"	NOTE #1
D102	O.P.D. LOBBY & WAITING	EP	—	EP	SPM	PVF	—	PVF	SPM	PVF	—	PVF	—	PPT	AT-1	8'-6"	8'-6"	
D102A	CORRIDOR	EP	—	EP	—	PVF	—	PVF	—	PVF	—	PVF	—	AT-1	AT-1	8'-0"	8'-0"	NOTE #1
D102B	CORRIDOR	EP	—	EP	—	PVF	—	PVF	—	PVF	—	PVF	—	AT-1	AT-1	8'-0"	8'-0"	NOTE #1
D103	WAITING	EP	—	EP	—	PVF	—	PVF	—	PVF	—	PVF	—	PPT	AT-1	8'-6"	8'-6"	
D103A	CORRIDOR	EP	—	EP	—	PVF	—	PVF	—	PVF	—	PVF	—	AT-1	AT-1	8'-0"	8'-0"	NOTE #1
D103B	CORRIDOR	EP	—	EP	—	PVF	—	PVF	—	PVF	—	PVF	—	AT-1	AT-1	8'-0"	8'-0"	NOTE #1
D104	CORRIDOR	VT-1	—	RB	—	PVF	—	PVF	—	PVF	—	PVF	—	AT-1	AT-1	8'-0"	8'-0"	NOTE #1
D105	CORRIDOR	VT-1	—	RB	—	PVF	—	PVF	—	PVF	—	PVF	—	AT-1	AT-1	8'-0"	8'-0"	NOTE #1
D106	ELEVATOR LOBBY	VT-1	—	RB	—	PVF	—	PVF	—	PVF	—	PVF	—	AT-1	AT-1	8'-0"	8'-0"	NOTE #1
D108	DUTY CORPM. B.R.	VT-1	—	RB	—	PPT	—	PPT	—	PPT	—	PPT	—	ASP	AT-1	8'-0"	8'-0"	
D109	INFO DESK	CP	—	RB	—	PVF	—	PVF	—	PVF	—	PVF	—	PPT	AT-1	8'-0"	8'-0"	

FINISH LEGEND

AT-A	ACOUSTICAL TILE CEILING (EXISTING 2X4)
AT-1	ACOUSTICAL TILE CEILING (2X2 STANDARD FINISH)
AT-2	ACOUSTICAL TILE CEILING (2X2 WATER PROOF FINISH)
ASP	ACOUSTICAL CONCEALED SPLINE CEILING
MSP	METAL CONCEALED SPLINE CEILING
PPT	PLASTER PAINTED
PSP	PLASTER SPRAYED TEXTURED FINISH
PLG	PLASTER LIQUID GLAZED COATING
GPT	GYPSUM WALL BOARD PAINTED
GLG	GYPSUM WALL BOARD LIQUID GLAZED COATING
CPT	CONCRETE PAINTED
CCS	CONCRETE WITH CONCRETE SEALER
CT	CERAMIC TILE
PVF	PLASTER WITH VINYL WALL FABRIC
GVF	GYPSUM WALL BOARD W/ VINYL WALL FABRIC
QT	QUARRY TILE
CP	CARPET
VT-1	VINYL ASBESTOS TILE
VT-2	VINYL COMPOSITION TILE
SV	SHEET VINYL
EP	EPOXY TERRAZZO
SPCF	CONDUCTIVE FLOORING
SPT	PATCH & PAINT TO MATCH EXISTING
SPM	PATCH TO MATCH EXISTING
SPW	PLYWOOD PANELING
RB	RESILIENT BASE
EXP	EXPOSED STRUCTURE

NOTE #1 REMOVE EXISTING LAY-IN ACOUSTICAL CEILING SYSTEM TO EXTENT REQUIRED TO ACCOMPLISH WORK ABOVE CEILING. (STORE MATERIALS AND RE-INSTALL EXISTING CEILING SYSTEM)

SEAL AREA

ENG. DIV. DIR.: DATE: SATISFACTORY TO: DATE:

DESIGN BY: RAS DRAWN BY: FLT

REVISION DESCRIPTION DATE

DEPARTMENT OF THE NAVY NAVAL FACILITIES ENGINEERING COMMAND
NAVY PUBLIC WORKS CENTER, JACKSONVILLE, FL
U.S. NAVAL STATION ROOSEVELT ROADS, P.R.
REPAIRS TO NAVAL HOSPITAL
FINISH SCHEDULE

CONSTR. CONTR. NO. NAVFAC DWG. NO.

PLATE NO. A3-6

SHERLOCK, SMITH & ADAMS, INC.
ARCHITECTS – ENGINEERS
MONTGOMERY, ALABAMA

U.S. NAVAL STATION ROOSEVELT ROADS, P.R.
REPAIRS TO NAVAL HOSPITAL
FINISH SCHEDULE

CONSTR. CONTR. NO. | SPECIFICATION NO. | NAVFAC DWG. NO. | TP NO. | SHEET ? OF ??

FINISH SCHEDULE

ROOM NO.	ROOM NAME	FLOOR EXIST.	FLOOR NEW	BASE EXIST.	BASE NEW	WALLS NORTH EXIST.	WALLS NORTH NEW	WALLS EAST EXIST.	WALLS EAST NEW	WALLS SOUTH EXIST.	WALLS SOUTH NEW	WALLS WEST EXIST.	WALLS WEST NEW	CEILINGS MATERIAL EXIST.	CEILINGS MATERIAL NEW	CEILINGS HGT. EXIST.	CEILINGS HGT. NEW	REMARKS
D112	STORAGE	VT-1	—	RB	—	PLG	—	PLG	—	PLG	—	PLG	—	ASP	AT-1	8'-0"	8'-0"	
D115	OFFICE	CP	—	RB	—	PPT	—	PPT	—	PPT	—	PPT	—	ASP	AT-1	8'-0"	8'-0"	
D116	O.P. RECORDS	CP	—	RB	SPM	PVF	—	PVF	—	PVF	—	PVF	SPM	ASP	AT-1	8'-0"	8'-0"	
D117	COPY/ WORK ROOM	CP	—	RB	—	PPT	—	PPT	—	PPT	—	PPT	—	ASP	AT-1	8'-0"	8'-0"	
D118	O.P. RECORDS OFFICE	CP	—	RB	—	PPT	—	PPT	—	PPT	—	PPT	—	ASP	AT-1	8'-0"	8'-0"	
D119	O.P. RECORDS	CP	—	RB	—	PPT	—	PPT	—	PPT	—	PPT	—	ASP	AT-1	8'-0"	8'-0"	
D122	C.O.D. OFFICE	CP	—	RB	—	PPT	—	PPT	—	PPT	—	PPT	—	ASP	AT-1	8'-6"	8'-6"	
D123	ELEC. ROOM	CP	—	RB	—	PPT	—	PPT	—	PPT	—	PPT	—	EXP	—	8'-0"	8'-0"	
D125	DUTY CHIEF B.R.	VT-1	—	RB	—	PPT	—	PPT	—	PPT	—	PPT	—	ASP	AT-1	8'-0"	8'-0"	
D127	DUTY OFFICER B.R.	VT-1	—	RB	—	PPT	—	PPT	—	PPT	—	PPT	—	ASP	AT-1	8'-0"	8'-0"	
A201	CORRIDOR	VT-1	—	RB	SPM	PVF	—	PVF	—	PVF	SPT	PVF	SPT	AT-A	AT-1	8'-0"	8'-0"	
A202	CORRIDOR	VT-1	—	RB	—	PVF	—	PVF	—	PVF	—	PVF	—	AT-1	AT-1	8'-0"	8'-0"	NOTE #1
A202A	NURSE	VT-1	—	RB	—	PVF	—	PVF	—	PVF	—	PVF	—	AT-1	AT-1	8'-0"	8'-0"	NOTE #1
A203	CORRIDOR	SPCF	—	SPCF	—	PLG	—	PLG	—	PLG	—	PLG	—	AT-1	AT-1	8'-0"	8'-0"	NOTE #1
A205	CORRIDOR	VT-1	—	RB	—	PVF	—	PVF	—	PVF	—	PVF	—	AT-1	AT-1	8'-0"	8'-0"	NOTE #1
A206	CORRIDOR	VT-1	—	RB	—	PVF	—	PVF	—	PVF	—	PVF	—	AT-A	AT-1	8'-0"	8'-0"	
A208	1-BED ROOM	VT-1	—	RB	—	PPT	—	PPT	—	PPT	—	PPT	—	AT-1	AT-1	8'-6"	8'-6"	NOTE #1
A210	DIV. OFFICER	VT-1	—	RB	—	PPT	—	PPT	—	PPT	—	PPT	—	ASP	AT-1	8'-6"	8'-6"	
A211	LPO/GYN OFFICE	VT-1	—	RB	—	PPT	—	PPT	—	PPT	—	PPT	—	AT-1	AT-1	8'-6"	8'-6"	NOTE #1
A212	OFFICE/EXAM	VT-1	—	RB	—	PPT	—	PPT	—	PPT	—	PPT	—	AT-1	AT-1	8'-6"	8'-6"	NOTE #1
A213	OFFICE/EXAM	VT-1	—	RB	—	PPT	—	PPT	—	PPT	—	PPT	—	AT-1	AT-1	8'-6"	8'-6"	NOTE #1
A216	SOILED	VT-1	—	RB	—	PLG	—	PLG	—	PLG	—	PLG	—	ASP	AT-1	8'-0"	8'-0"	
A219	1-BED ROOM	VT-1	—	RB	—	PPT	—	PPT	—	PPT	—	PPT	—	AT-1	AT-1	8'-6"	8'-6"	NOTE #1
A220	2-BED ROOM	VT-1	—	RB	—	PPT	—	PPT	—	PPT	—	PPT	—	AT-1	AT-1	8'-6"	8'-6"	NOTE #1
A221	2-BED ROOM	VT-1	—	RB	—	PPT	—	PPT	—	PPT	—	PPT	—	AT-1	AT-1	8'-6"	8'-0"	NOTE #1
A222	CONTROL	VT-1	—	RB	—	PPT	—	PPT	—	PPT	—	PPT	—	ASP	AT-1	8'-0"	8'-0"	
A223	OXYGEN CLINIC WAITING	VT-1	—	RB	—	PPT	—	PPT	—	PPT	—	PPT	—	AT-1	AT-1	8'-6"	8'-6"	NOTE #1
A225	OFFICE/ EXAM	VT-1	—	RB	—	PPT	—	PPT	—	PPT	—	PPT	—	AT-1	AT-1	8'-6"	8'-6"	NOTE #1
A227	SOIL	VT-1	—	RB	—	PLG	—	PLG	—	PLG	—	PLG	—	ASP	AT-1	8'-0"	8'-0"	
A228	SUPPLY	VT-1	—	RB	—	PPT	—	PPT	—	PPT	—	PPT	—	ASP	AT-1	8'-0"	8'-0"	
A230	4-BED ROOM	VT-1	—	RB	—	PPT	—	PPT	—	PPT	—	PPT	—	AT-1	AT-1	8'-6"	8'-6"	NOTE #1
A237	CLEAN	VT-1	—	RB	—	PLG	—	PLG	—	PLG	—	PLG	—	ASP	AT-1	8'-0"	8'-0"	
A239	DIV. OFFICE	VT-1	—	RB	—	PPT	—	PPT	—	PPT	—	PPT	—	ASP	AT-1	8'-0"	8'-0"	
A240	LPO/OB	VT-1	—	RB	—	PPT	—	PPT	—	PPT	—	PPT	—	ASP	AT-1	8'-0"	8'-0"	
A241	PATIENT INTERVIEW	VT-1	—	RB	—	PPT	—	PPT	—	PPT	—	PPT	—	AT-1	AT-1	8'-6"	8'-6"	NOTE #1
A243	4-BED ROOM	VT-1	—	RB	—	PPT	—	PPT	—	PPT	—	PPT	—	AT-1	AT-1	8'-6"	8'-6"	NOTE #1
A244	1-BED ROOM	VT-1	—	RB	—	PPT	—	PPT	—	PPT	—	PPT	—	AT-1	AT-1	8'-6"	8'-6"	NOTE #1
A255	STAFF LOUNGE	VT-1	—	RB	—	PPT	—	PPT	—	PPT	—	PPT	—	AT-1	AT-1	8'-6"	8'-6"	NOTE #1
A256	ASSIST. DIR. NURSING	VT-1	—	RB	—	PPT	—	PPT	—	PPT	—	PPT	—	AT-1	AT-1	8'-6"	8'-6"	NOTE #1
B201	CORRIDOR	VT-1	—	RB	—	PVF	—	PVF	—	PVF	—	PVF	—	AT-A	AT-1	8'-0"	8'-0"	
B202	CORRIDOR	VT-1	—	RB	—	PVF	—	PVF	—	PVF	—	PVF	—	AT-A	AT-1	8'-0"	8'-0"	
B203	PASSAGE	VT-1	—	RB	—	PVF	—	PVF	—	PVF	—	PVF	—	AT-A	AT-1	8'-6"	8'-6"	
B203A	PASSAGE	VT-1	—	RB	—	PVF	—	PVF	—	PVF	—	PVF	—	AT-A	AT-1	8'-6"	8'-6"	
B203B	ADMIN. OFFICES	VT-1	—	RB	—	PVF	—	PVF	—	PVF	—	PVF	—	AT-1	AT-1	8'-6"	8'-6"	NOTE #1
B204	2-BED ROOM	VT-1	—	RB	—	PPT	—	PPT	—	PPT	—	PPT	—	AT-1	AT-1	8'-6"	8'-6"	NOTE #1
B206	DR'S OFFICE	VT-1	—	RB	—	PPT	—	PPT	—	PPT	—	PPT	—	AT-1	AT-1	8'-6"	8'-6"	NOTE #1

FINISH LEGEND

AT-A	ACOUSTICAL TILE CEILING (EXISTING 2X4)
AT-1	ACOUSTICAL TILE CEILING (2X2 STANDARD FINISH)
AT-2	ACOUSTICAL TILE CEILING (2X2 WATER PROOF FINISH)
ASP	ACOUSTICAL CONCEALED SPLINE CEILING
MSP	METAL CONCEALED SPLINE CEILING
PPT	PLASTER PAINTED
PSP	PLASTER SPRAYED TEXTURED FINISH
PLG	PLASTER LIQUID GLAZED COATING
GPT	GYPSUM WALL BOARD PAINTED
GLG	GYPSUM WALL BOARD LIQUID GLAZED COATING
CPT	CONCRETE PAINTED
CCS	CONCRETE WITH CONCRETE SEALER
CT	CERAMIC TILE
PVF	PLASTER WITH VINYL WALL FABRIC
GVF	GYPSUM WALL BOARD W/ VINYL WALL FABRIC
QT	QUARRY TILE
CP	CARPET
VT-1	VINYL ASBESTOS TILE
VT-2	VINYL COMPOSITION TILE
SV	SHEET VINYL
EP	EPOXY TERRAZZO
SPCF	CONDUCTIVE FLOORING
SPT	PATCH & PAINT TO MATCH EXISTING
SPM	PATCH TO MATCH EXISTING
SPW	PLYWOOD PANELING
RB	RESILIENT BASE
EXP	EXPOSED STRUCTURE

NOTE #1 REMOVE EXISTING LAY-IN ACOUSTICAL CEILING SYSTEM TO EXTENT REQUIRED TO ACCOMPLISH WORK ABOVE CEILING. (STORE MATERIALS AND RE-INSTALL EXISTING CEILING SYSTEM)

SEAL AREA

ENG. DIV. DIR.: DATE: SATISFACTORY TO: DATE:

DESIGN BY: RAS DRAWN BY: FLT
CHK BY: RAS APPROVED:

DATE	REVISION DESCRIPTION

DEPARTMENT OF THE NAVY — NAVAL FACILITIES ENGINEERING COMMAND
NAVY PUBLIC WORKS CENTER, JACKSONVILLE, FL
U.S. NAVAL STATION ROOSEVELT ROADS, P.R.
REPAIRS TO NAVAL HOSPITAL
FINISH SCHEDULE

PWC DWG. NO. NAVFAC DWG. NO. CONSTR. CONTR. NO.

SHERLOCK, SMITH & ADAMS, INC.
ARCHITECTS - ENGINEERS
MONTGOMERY, ALABAMA

U.S. NAVAL STATION ROOSEVELT ROADS, P.R.
REPAIRS TO NAVAL HOSPITAL
FINISH SCHEDULE

CONSTR. CONTR. NO. | SPECIFICATION NO. | NAVFAC DRWG. NO. | TF NO. | SHEET ? OF ??

PLATE NO. A3-7

FINISH SCHEDULE

ROOM	ROOM NAME	FLOOR		BASE		WALLS NORTH		WALLS EAST		WALLS SOUTH		WALLS WEST		CEILINGS MATERIAL		CEILINGS HGT.		REMARKS
NO.		EXIST.	NEW	EXIST.	NEW	EXIST.	NEW	EXIST.	NEW	EXIST.	NEW	EXIST.	NEW	EXIST.	NEW	EXIST.	NEW	
B207	MENTAL HEALTH CLINIC	VT-1	—	RB	—	PPT	—	PPT	—	PPT	—	PPT	—	AT-1	AT-1	8'-6"	8'-6"	NOTE #1
B209	STORAGE	CT	—	CT	—	PLG	—	PLG	—	PLG	—	PLG	—	PPT	—	8'-0"	8'-0"	
B210A	STORAGE	CT	—	CT	—	PLG	—	PLG	—	PLG	—	PLG	—	PPT	—	8'-0"	8'-0"	
B212	4-BED ROOM	VT-1	—	RB	—	PPT	—	PPT	—	PPT	—	PPT	—	AT-1	AT-1	8'-6"	8'-6"	NOTE #1
B213	2-BED ROOM	VT-1	—	RB	—	PPT	—	PPT	—	PPT	—	PPT	—	AT-1	AT-1	8'-6"	8'-6"	NOTE #1
B214	CLEAN	VT-1	—	RB	—	PPT	—	PPT	—	PPT	—	PPT	—	PPT	AT-1	8'-0"	8'-0"	
B215	WAITING ROOM	VT-1	—	RB	—	PPT	—	PPT	—	PPT	—	PPT	—	AT-1	AT-1	8'-6"	8'-6"	NOTE #1
B216	FAMILY ADVICATE OFFICE	VT-1	—	RB	—	PPT	—	PPT	—	PPT	—	PPT	—	AT-1	AT-1	8'-6"	8'-6"	NOTE #1
B218	OFFICE	VT-1	—	RB	—	PPT	—	PPT	—	PPT	—	PPT	—	ASP	AT-1	8'-0"	8'-0"	
B219	2-BED ROOM	VT-1	—	RB	—	PPT	—	PPT	—	PPT	—	PPT	—	AT-1	AT-1	8'-6"	8'-6"	NOTE #1
B220	4-BED ROOM	VT-1	—	RB	—	PPT	—	PPT	—	PPT	—	PPT	—	AT-1	AT-1	8'-6"	8'-6"	NOTE #1
B222	TREATMENT	VT-1	—	RB	—	PPT	—	PPT	—	PPT	—	PPT	—	ASP	AT-1	8'-0"	8'-0"	
B225	DR'S OFFICE	VT-1	—	RB	—	PPT	—	PPT	—	PPT	—	PPT	—	AT-1	AT-1	8'-6"	8'-6"	NOTE #1
B226	DR'S OFFICE	VT-1	—	RB	—	PPT	—	PPT	—	PPT	—	PPT	—	AT-1	AT-1	8'-6"	8'-6"	NOTE #1
B228	COLLECTION AGENT	VT-1	—	RB	—	PPT	—	PPT	—	PPT	—	PPT	—	ASP	AT-1	8'-0"	8'-0"	
B229	2-BED ROOM	VT-1	—	RB	—	PPT	—	PPT	—	PPT	—	PPT	—	AT-1	AT-1	8'-6"	8'-6"	NOTE #1
B230	CHAMPUS	VT-1	—	RB	—	PPT	—	PPT	—	PPT	—	PPT	—	AT-1	AT-1	8'-6"	8'-6"	NOTE #1
B235	LCPO NURSING SERVICE	VT-1	—	RB	—	PPT	—	PPT	—	PPT	—	PPT	—	ASP	AT-1	8'-6"	8'-6"	
B236	PATIENT ADMIN, TRANSC.	VT-1	—	RB	—	PPT	—	PPT	—	PPT	—	PPT	—	AT-1	AT-1	8'-6"	8'-6"	NOTE #1
B237	PATIEN ADMIN. ARCHIVES	VT-1	—	RB	—	PPT	—	PPT	—	PPT	—	PPT	—	AT-1	AT-1	8'-6"	8'-6"	NOTE #1
B239	OFFICE	VT-1	—	RB	—	PVF	—	PVF	—	PVF	—	PVF	—	ASP	AT-1	8'-6"	8'-6"	
B242	OVERSEAS SCREENING	VT-1	—	RB	—	PPT	—	PPT	—	PPT	—	PPT	—	AT-1	AT-1	8'-6"	8'-6"	NOTE #1
B243	ADMISSION OFFICE	VT-1	—	RB	—	PPT	—	PPT	—	PPT	—	PPT	—	AT-1	AT-1	8'-6"	8'-6"	NOTE #1
B244	DEPT. HEAD	VT-1	—	RB	—	PPT	—	PPT	—	PPT	—	PPT	—	ASP	AT-1	8'-6"	8'-6"	
C201	CORRIDOR	VT-1	—	RB	—	PVF	—	PVF	—	PVF	—	PVF	—	AT-1	AT-1	8'-0"	8'-0"	NOTE #1
C205	PASSAGE	VT-1	—	RB	—	PVF	—	PVF	—	PVF	—	PVF	—	ASP	AT-1	8'-0"	8'-0"	
C212	DR'S LOCKERS	VT-1	—	RB	—	PPT	—	PPT	—	PPT	—	PPT	—	ASP	AT-1	8'-6"	8'-6"	
C214	OFFICE	VT-1	—	RB	—	PPT	—	PPT	—	PPT	—	PPT	—	ASP	AT-1	8'-0"	8'-0"	
C216	NURSE'S LOCKERS	VT-1	—	RB	—	PPT	—	PPT	—	PPT	—	PPT	—	ASP	AT-1	8'-0"	8'-0"	
C219	OFFICE	VT-1	—	RB	—	PPT	—	PPT	—	PPT	—	PPT	—	ASP	AT-1	8'-0"	8'-0"	
C220	OFFICE	VT-1	—	RB	—	PPT	—	PPT	—	PPT	—	PPT	—	ASP	AT-1	8'-0"	8'-0"	
C230	GNW STORAGE	VT-1	—	RB	—	PPT	—	PPT	—	PPT	—	PPT	—	AT-1	AT-1	8'-6"	8'-6"	NOTE #1
C231	OFFICE	VT-1	—	RB	—	PPT	—	PPT	—	PPT	—	PPT	—	AT-1	AT-1	8'-6"	8'-6"	NOTE #1
C236	OFFICE	VT-1	—	RB	—	PPT	—	PPT	—	PPT	—	PPT	—	AT-1	AT-1	8'-6"	8'-6"	NOTE #1
C241	4-BED ROOM	VT-1	—	RB	—	PPT	—	PPT	—	PPT	—	PPT	—	AT-1	AT-1	8'-6"	8'-6"	NOTE #1
C246	1-BED ROOM	VT-1	—	RB	—	PPT	—	PPT	—	PPT	—	PPT	—	AT-1	AT-1	8'-6"	8'-6"	NOTE #1
D201	ELEVATOR LOBBY	VT-1	—	RB	—	PVF	—	PVF	—	PVF	—	PVF	—	AT-A	AT-1	8'-0"	8'-0"	
D202	CORRIDOR	VT-1	—	RB	—	PVF	—	PVF	—	PVF	—	PVF	—	AT-A	AT-1	8'-0"	8'-0"	
D203	CORRIDOR	VT-1	—	RB	SPM	PVF	—	PVF	—	PVF	SPT	PVF	—	AT-A	AT-1	8'-0"	8'-0"	
D204	CORRIDOR	VT-1	—	RB	—	PVF	—	PVF	—	PVF	—	PVF	—	AT-A	AT-1	8'-0"	8'-0"	
D204A	NURSE'S	VT-1	—	RB	—	PVF	—	PVF	—	PVF	—	PVF	—	AT-A	AT-1	8'-0"	8'-0"	
D205	CORRIDOR	VT-1	—	RB	—	PVF	—	PVF	—	PVF	—	PVF	—	AT-1	AT-1	8'-0"	8'-0"	NOTE #1
D206	PASSAGE	VT-1	—	RB	—	PVF	—	PVF	—	PVF	—	PVF	—	AT-1	AT-1	8'-0"	8'-0"	NOTE #1
D220	NURSE	VT-1	—	RB	—	PPT	—	PPT	—	PPT	—	PPT	—	AT-1	AT-1	8'-0"	8'-0"	NOTE #1

FINISH LEGEND

AT-A	ACOUSTICAL TILE CEILING (EXISTING 2X4)
AT-1	ACOUSTICAL TILE CEILING (2X2 STANDARD FINISH)
AT-2	ACOUSTICAL TILE CEILING (2X2 WATER PROOF FINISH)
ASP	ACOUSTICAL CONCEALED SPLINE CEILING
MSP	METAL CONCEALED SPLINE CEILING
PPT	PLASTER PAINTED
PSP	PLASTER SPRAYED TEXTURED FINISH
PLG	PLASTER LIQUID GLAZED COATING
GPT	GYPSUM WALL BOARD PAINTED
GLG	GYPSUM WALL BOARD LIQUID GLAZED COATING
CPT	CONCRETE PAINTED
CCS	CONCRETE WITH CONCRETE SEALER
CT	CERAMIC TILE
PVF	PLASTER WITH VINYL WALL FABRIC
GVF	GYPSUM WALL BOARD W/ VINYL WALL FABRIC
QT	QUARRY TILE
CP	CARPET
VT-1	VINYL ASBESTOS TILE
VT-2	VINYL COMPOSITION TILE
SV	SHEET VINYL
EP	EPOXY TERRAZZO
SPCF	CONDUCTIVE FLOORING
SPT	PATCH & PAINT TO MATCH EXISTING
SPM	PATCH TO MATCH EXISTING
SPW	PLYWOOD PANELING
RB	RESILIENT BASE
EXP	EXPOSED STRUCTURE

NOTE #1 REMOVE EXISTING LAY-IN ACOUSTICAL CEILING SYSTEM TO EXTENT REQUIRED TO ACCOMPLISH WORK ABOVE CEILING. (STORE MATERIALS AND RE-INSTALL EXISTING CEILING SYSTEM)

SEAL AREA

ENG. DIV. DR.: DATE: SATISFACTORY TO: DATE:

DESIGN BY: RAS DRAWN BY: FLT

REVISION DESCRIPTION | DATE

DEPARTMENT OF THE NAVY — NAVAL FACILITIES ENGINEERING COMMAND
NAVY PUBLIC WORKS CENTER, JACKSONVILLE, FL
U.S. NAVAL STATION ROOSEVELT ROADS, P.R.
REPAIRS TO NAVAL HOSPITAL
FINISH SCHEDULE

CONSTR. CONTR. NO. | NAVFAC DWG. NO. | PWC DWG. NO.

SHERLOCK, SMITH & ADAMS, INC.
ARCHITECTS ~ ENGINEERS
MONTGOMERY, ALABAMA

U.S. NAVAL STATION ROOSEVELT ROADS, P.R.
REPAIRS TO NAVAL HOSPITAL
FINISH SCHEDULE

CONSTR. CONTR. NO. | SPECIFICATION NO. | NAVFAC DWG. NO. | PF NO.
SHEET ? OF ??

PLATE NO. A3-8

PWC #

FINISH SCHEDULE

ROOM NO.	ROOM NAME	FLOOR EXIST.	FLOOR NEW	BASE EXIST.	BASE NEW	WALLS NORTH EXIST.	WALLS NORTH NEW	WALLS EAST EXIST.	WALLS EAST NEW	WALLS SOUTH EXIST.	WALLS SOUTH NEW	WALLS WEST EXIST.	WALLS WEST NEW	CEILINGS MATERIAL EXIST.	CEILINGS MATERIAL NEW	CEILINGS HGT. EXIST.	CEILINGS HGT. NEW	REMARKS
D222	R.P. OFFICE	VT-1	—	RB	—	PPT	—	PPT	—	PPT	—	PPT	—	AT-1	AT-1	8'-6"	8'-6"	NOTE #1
D223	CHAPLIN'S OFFICE	VT-1	—	RB	—	PPT	—	PPT	—	PPT	—	PPT	—	AT-1	AT-1	8'-6"	8'-6"	NOTE #1
D230A	CHAPEL	VT-1	—	RB	SPM	PPT	SPM	PPT	—	PPT	—	PPT	—	AT-A	AT-1	8'-6"	8'-6"	
D236	1-BED ROOM	VT-1	—	RB	—	PPT	—	PPT	—	PPT	—	PPT	—	AT-1	AT-1	8'-6"	8'-6"	NOTE #1
D238	WORK ROOM	VT-1	—	RB	—	PPT	—	PPT	—	PPT	—	PPT	—	AT-1	AT-1	8'-6"	8'-6"	NOTE #1
D240	4-BED ROOM	VT-1	—	RB	—	PPT	—	PPT	—	PPT	—	PPT	—	AT-1	AT-1	8'-6"	8'-6"	NOTE #1

FINISH LEGEND

AT-A	ACOUSTICAL TILE CEILING (EXISTING 2X4)
AT-1	ACOUSTICAL TILE CEILING (2X2 STANDARD FINISH)
AT-2	ACOUSTICAL TILE CEILING (2X2 WATER PROOF FINISH)
ASP	ACOUSTICAL CONCEALED SPLINE CEILING
MSP	METAL CONCEALED SPLINE CEILING
PPT	PLASTER PAINTED
PSP	PLASTER SPRAYED TEXTURED FINISH
PLG	PLASTER LIQUID GLAZED COATING
GPT	GYPSUM WALL BOARD PAINTED
GLG	GYPSUM WALL BOARD LIQUID GLAZED COATING
CPT	CONCRETE PAINTED
CCS	CONCRETE WITH CONCRETE SEALER
CT	CERAMIC TILE
PVF	PLASTER WITH VINYL WALL FABRIC
GVF	GYPSUM WALL BOARD W/ VINYL WALL FABRIC
QT	QUARRY TILE
CP	CARPET
VT-1	VINYL ASBESTOS TILE
VT-2	VINYL COMPOSITION TILE
SV	SHEET VINYL
EP	EPOXY TERRAZZO
SPCF	CONDUCTIVE FLOORING
SPT	PATCH & PAINT TO MATCH EXISTING
SPM	PATCH TO MATCH EXISTING
SPW	PLYWOOD PANELING
RB	RESILIENT BASE
EXP	EXPOSED STRUCTURE

NOTE #1 REMOVE EXISTING LAY-IN ACOUSTICAL CEILING SYSTEM TO EXTENT REQUIRED TO ACCOMPLISH WORK ABOVE CEILING. (STORE MATERIALS AND RE-INSTALL EXISTING CEILING SYSTEM)

SEAL AREA

DRAWN BY: FLT
DESIGN BY: RAS
ENG. DIV. DIR.: DATE
SATISFACTORY TO: DATE

REVISION DESCRIPTION	DATE

DEPARTMENT OF THE NAVY
NAVAL FACILITIES ENGINEERING COMMAND
NAVY PUBLIC WORKS CENTER, JACKSONVILLE, FL
U.S. NAVAL STATION ROOSEVELT ROADS, P.R.
REPAIRS TO NAVAL HOSPITAL
FINISH SCHEDULE

SHERLOCK, SMITH & ADAMS, INC.
ARCHITECTS – ENGINEERS
MONTGOMERY, ALABAMA

U.S. NAVAL STATION ROOSEVELT ROADS, P.R.
REPAIRS TO NAVAL HOSPITAL
FINISH SCHEDULE

CONSTR. CONTR. NO. | SPECIFICATION NO. | NAVFAC DRWG. NO. | TF NO. | SHEET ? OF ??

PLATE NO.
A3-9

DOOR SCHEDULE

DOOR NO.	DOOR SIZE W	DOOR SIZE H	DOOR SIZE T	DOOR TYPE	DOOR MATERIAL	FRAME TYPE	LABEL HOURS	HDW. SET	JAMB	HEAD	REMARKS
[illegible]	3'-0"	7'-0"	1 3/4"			HM			EXST	EXST	
A034	3'-10"	7'-0"	1 3/4"			HM			EXST	EXST	
A044	3'-0"	7'-0"	1 3/4"			HM			EXST	EXST	
B01	PR 3'-6"	7'-0"	1 3/4"			HM			EXST	EXST	
B02C	3'-0"	7'-0"	1 3/4"			HM			EXST	EXST	
B02G	PR 3'-0"	7'-0"	1 3/4"			HM			EXST	EXST	
B05	3'-10"	7'-0"	1 3/4"			HM			EXST	EXST	
B010B	3'-6"	7'-0"	1 3/4"			HM			EXST	EXST	
B011	3'-6"	7'-0"	1 3/4"			HM			EXST	EXST	
B015	3'-6"	7'-0"	1 3/4"			HM			EXST	EXST	
B016	3'-6"	7'-0"	1 3/4"			HM			EXST	EXST	
B016A	PR 3'-0"	7'-0"	1 3/4"			HM			EXST	EXST	
B017	3'-0"	7'-0"	1 3/4"			HM			EXST	EXST	
B020	3'-0"	7'-0"	1 3/4"			HM			EXST	EXST	
C01	3'-10"	7'-0"	1 3/4"			HM			EXST	EXST	
C02	3'-0"	7'-0"	1 3/4"			HM			EXST	EXST	
C04	3'-0"	7'-0"	1 3/4"			HM			EXST	EXST	
C06	3'-0"	7'-0"	1 3/4"			HM			EXST	EXST	
C08	3'-10"	7'-0"	1 3/4"			HM			EXST	EXST	
C09	3'-10"	7'-0"	1 3/4"			HM			EXST	EXST	
C010	3'-0"	7'-0"	1 3/4"								
C011	3'-0"	7'-0"	1 3/4"								
[illegible]	3'-0"	7'-0"	1 3/4"			HM			EXST	EXST	
C015	3'-0"	7'-0"	1 3/4"								
C017	3'-10"	7'-0"	1 3/4"			HM			EXST	EXST	
D04	PR 2'-8"	7'-0"	1 3/4"			HM			EXST	EXST	
D010	3'-0"	7'-0"	1 3/4"			HM			EXST	EXST	
D011	3'-0"	7'-0"	1 3/4"			HM			EXST	EXST	
D018	3'-6"	7'-0"	1 3/4"			HM			EXST	EXST	
D021	3'-6"	7'-0"	1 3/4"			HM			EXST	EXST	
D022	3'-6"	7'-0"	1 3/4"			HM			EXST	EXST	
D025	3'-10"	7'-0"	1 3/4"			HM			EXST	EXST	
D027	3'-0"	7'-0"	1 3/4"			HM			EXST	EXST	
D029	3'-0"	7'-0"	1 3/4"			HM			EXST	EXST	
D030	3'-0"	7'-0"	1 3/4"			HM			EXST	EXST	
A104	3'-6"	7'-0"	1 3/4"			HM			EXST	EXST	
A112	3'-0"	7'-0"	1 3/4"			HM			EXST	EXST	
A119	3'-0"	7'-0"	1 3/4"			HM			EXST	EXST	
A125	3'-0"	7'-0"	1 3/4"			HM			EXST	EXST	
A148	3'-0"	7'-0"	1 3/4"			HM			EXST	EXST	
A150	2'-8"	7'-0"	1 3/4"			HM			EXST	EXST	
A151	3'-6"	7'-0"	1 3/4"			HM			EXST	EXST	
A159	3'-0"	7'-0"	1 3/4"			HM			EXST	EXST	
A165	3'-0"	7'-0"	1 3/4"			HM			EXST	EXST	
[illegible]	3'-0"	7'-0"	1 3/4"			HM			EXST	EXST	
[illegible]	3'-0"	7'-0"	1 3/4"			HM			EXST	EXST	
B142	3'-0"	7'-0"	1 3/4"			HM			EXST	EXST	
B143	3'-6"	7'-0"	1 3/4"			HM			EXST	EXST	
B144	3'-0"	7'-0"	1 3/4"			HM			EXST	EXST	
B161	3'-0"	7'-0"	1 3/4"			HM			EXST	EXST	
S1A	3'-10"	7'-0"	1 3/4"			HM			EXST	EXST	

DOOR SCHEDULE

DOOR NO.	DOOR SIZE W	DOOR SIZE H	DOOR SIZE T	DOOR TYPE	DOOR MATERIAL	FRAME TYPE	LABEL HOURS	HDW. SET	JAMB	HEAD	REMARKS
S2A	3'-10"	7'-0"	1 3/4"			HM			EXST	EXST	
S2B	3'-10"	7'-0"	1 3/4"			HM			EXST	EXST	
C102	3'-10"	7'-0"	1 3/4"			HM			EXST	EXST	
C112	3'-0"	7'-0"	1 3/4"			HM			EXST	EXST	
C114	3'-0"	7'-0"	1 3/4"			HM			EXST	EXST	
C116	3'-0"	7'-0"	1 3/4"			HM			EXST	EXST	
C135	3'-0"	7'-0"	1 3/4"			HM			EXST	EXST	
C140	3'-0"	7'-0"	1 3/4"			HM			EXST	EXST	
C145	3'-0"	7'-0"	1 3/4"			HM			EXST	EXST	
C146	3'-0"	7'-0"	1 3/4"			HM			EXST	EXST	
C149	3'-0"	7'-0"	1 3/4"			HM			EXST	EXST	
C155	3'-0"	7'-0"	1 3/4"			HM			EXST	EXST	
C162A	3'-0"	7'-0"	1 3/4"			HM			EXST	EXST	
C162B	3'-0"	7'-0"	1 3/4"			HM			EXST	EXST	
C164	3'-0"	7'-0"	1 3/4"			HM			EXST	EXST	
C170	3'-0"	7'-0"	1 3/4"			HM			EXST	EXST	
S1B	3'-0"	7'-0"	1 3/4"			HM			EXST	EXST	
D108	3'-0"	7'-0"	1 3/4"			HM			EXST	EXST	
D112	3'-0"	7'-0"	1 3/4"			HM			EXST	EXST	
D115	3'-0"	7'-0"	1 3/4"			HM			EXST	EXST	
D117A	3'-0"	7'-0"	1 3/4"			HM			EXST	EXST	
D117B	3'-0"	7'-0"	1 3/4"			HM			EXST	EXST	
D118	3'-0"	7'-0"	1 3/4"			HM			EXST	EXST	
D119	3'-0"	7'-0"	1 3/4"			HM			EXST	EXST	
D122	3'-0"	7'-0"	1 3/4"			HM			EXST	EXST	
D124	3'-0"	7'-0"	1 3/4"			HM			EXST	EXST	
D125	3'-0"	7'-0"	1 3/4"			HM			EXST	EXST	
D127	3'-0"	7'-0"	1 3/4"			HM			EXST	EXST	
A208	3'-10"	7'-0"	1 3/4"			HM			EXST	EXST	
A209	3'-10"	7'-0"	1 3/4"			HM			EXST	EXST	
A212	3'-10"	7'-0"	1 3/4"			HM			EXST	EXST	
A213	3'-10"	7'-0"	1 3/4"			HM			EXST	EXST	
A219	3'-10"	7'-0"	1 3/4"			HM			EXST	EXST	
A220	3'-10"	7'-0"	1 3/4"			HM			EXST	EXST	
A221	3'-10"	7'-0"	1 3/4"			HM			EXST	EXST	
A223	3'-10"	7'-0"	1 3/4"			HM			EXST	EXST	
A225	3'-10"	7'-0"	1 3/4"			HM			EXST	EXST	
A228A	3'-10"	7'-0"	1 3/4"			HM			EXST	EXST	
A228B	3'-10"	7'-0"	1 3/4"			HM			EXST	EXST	
A230	3'-10"	7'-0"	1 3/4"			HM			EXST	EXST	
A232	3'-6"	7'-0"	1 3/4"			HM			EXST	EXST	
A236	3'-0"	7'-0"	1 3/4"			HM			EXST	EXST	
A240	3'-0"	7'-0"	1 3/4"			HM			EXST	EXST	
A241	3'-10"	7'-0"	1 3/4"			HM			EXST	EXST	
A243	3'-10"	7'-0"	1 3/4"			HM			EXST	EXST	

SEAL AREA

ENG. DIV. OFR. ____ DATE ____ SATISFACTION TO. ____ DATE ____

DESIGN BY: RAS DRAWN BY: FLT
CHK BY: RAS APPROVED:

REVISION DESCRIPTION	DATE

DEPARTMENT OF THE NAVY
NAVAL FACILITIES ENGINEERING COMMAND
NAVY PUBLIC WORKS CENTER, JACKSONVILLE, FL
U.S. NAVAL STATION ROOSEVELT ROADS, P.R.
REPAIRS TO NAVAL HOSPITAL
DOOR SCHEDULE

PWC DWG. NO. ____ NAVFAC DWG. NO. ____ CONSTR. CONTR. NO. ____

SHERLOCK, SMITH & ADAMS, INC.
ARCHITECTS – ENGINEERS
MONTGOMERY, ALABAMA

U.S. NAVAL STATION ROOSEVELT ROADS, P.R.
REPAIRS TO NAVAL HOSPITAL
DOOR SCHEDULE

CONSTR. CONTR. NO. | SPECIFICATION NO. | NAVFAC DRWG. NO. | TF NO | SHEET ? OF ??

PLATE NO.
A4-1

DOOR SCHEDULE

DOOR NO.	DOOR SIZE W	DOOR SIZE H	DOOR SIZE T	DOOR TYPE	DOOR MATERIAL	FRAME TYPE	LABEL HOURS	HDW. SET	JAMB	HEAD	REMARKS
[illegible]4	3'-10"	7'-0"	1 3/4"			HM			EXST	EXST	
A253A	3'-10"	7'-0"	1 3/4"			HM			EXST	EXST	
A253B	3'-10"	7'-0"	1 3/4"			HM			EXST	EXST	
A255	3'-10"	7'-0"	1 3/4"			HM			EXST	EXST	
A256	3'-10"	7'-0"	1 3/4"			HM			EXST	EXST	
B203	PR 3'-6"	7'-0"	1 3/4"			HM			EXST	EXST	
B203B	3'-10"	7'-0"	1 3/4"			HM			EXST	EXST	
B204	3'-10"	7'-0"	1 3/4"			HM			EXST	EXST	
B207	3'-10"	7'-0"	1 3/4"			HM			EXST	EXST	
B209	3'-0"	7'-0"	1 3/4"			HM			EXST	EXST	
B210A	3'-0"	7'-0"	1 3/4"			HM			EXST	EXST	
B212	3'-10"	7'-0"	1 3/4"			HM			EXST	EXST	
B213	3'-10"	7'-0"	1 3/4"			HM			EXST	EXST	
B215	3'-10"	7'-0"	1 3/4"			HM			EXST	EXST	
B216	3'-10"	7'-0"	1 3/4"			HM			EXST	EXST	
B217A	3'-0"	7'-0"	1 3/4"			HM			EXST	EXST	
B217B	3'-0"	7'-0"	1 3/4"			HM			EXST	EXST	
B218	3'-10"	7'-0"	1 3/4"			HM			EXST	EXST	
B219	3'-10"	7'-0"	1 3/4"			HM			EXST	EXST	
B220	3'-10"	7'-0"	1 3/4"			HM			EXST	EXST	
B222	3'-10"	7'-0"	1 3/4"			HM			EXST	EXST	
B223	3'-0"	7'-0"	1 3/4"			HM			EXST	EXST	
[illegible]5	3'-10"	7'-0"	1 3/4"			HM			EXST	EXST	
B226	3'-10"	7'-0"	1 3/4"			HM			EXST	EXST	
B228	3'-10"	7'-0"	1 3/4"			HM			EXST	EXST	
B230	3'-10"	7'-0"	1 3/4"			HM			EXST	EXST	
B236	3'-10"	7'-0"	1 3/4"			HM			EXST	EXST	
B237	3'-10"	7'-0"	1 3/4"			HM			EXST	EXST	
B239	3'-0"	7'-0"	1 3/4"			HM			EXST	EXST	
B241	3'-0"	7'-0"	1 3/4"			HM			EXST	EXST	
B242	3'-10"	7'-0"	1 3/4"			HM			EXST	EXST	
B243	3'-10"	7'-0"	1 3/4"			HM			EXST	EXST	
B244	3'-10"	7'-0"	1 3/4"			HM			EXST	EXST	
S1C	3'-10"	7'-0"	1 3/4"			HM			EXST	EXST	
S2C	3'-10"	7'-0"	1 3/4"			HM			EXST	EXST	
C201	*	7'-0"	1 3/4"			HM			EXST	EXST	1-3'-0" & '-4'-0"
C216	3'-0"	7'-0"	1 3/4"			HM			EXST	EXST	
C218	3'-0"	7'-0"	1 3/4"			HM			EXST	EXST	
C225	2'-10"	7'-0"	1 3/4"			HM			EXST	EXST	
C230	3'-10"	7'-0"	1 3/4"			HM			EXST	EXST	
C231	3'-10"	7'-0"	1 3/4"			HM			EXST	EXST	
C233	3'-10"	7'-0"	1 3/4"			HM			EXST	EXST	
C236	3'-10"	7'-0"	1 3/4"			HM			EXST	EXST	
C241	3'-10"	7'-0"	1 3/4"			HM			EXST	EXST	
[illegible]245	3'-0"	7'-0"	1 3/4"			HM			EXST	EXST	
[illegible]6	3'-10"	7'-0"	1 3/4"			HM			EXST	EXST	
D201A	3'-0"	7'-0"	1 3/4"			HM			EXST	EXST	
D06	3'-10"	7'-0"	1 3/4"			HM			EXST	EXST	
D211	3'-0"	7'-0"	1 3/4"			HM			EXST	EXST	
D213A	3'-0"	7'-0"	1 3/4"			HM			EXST	EXST	
D213B	3'-0"	7'-0"	1 3/4"			HM			EXST	EXST	

DOOR SCHEDULE

DOOR NO.	DOOR SIZE W	DOOR SIZE H	DOOR SIZE T	DOOR TYPE	DOOR MATERIAL	FRAME TYPE	LABEL HOURS	HDW. SET	JAMB	HEAD	REMARKS
D217	3'-0"	7'-0"	1 3/4"			HM			EXST	EXST	
D226	3'-0"	7'-0"	1 3/4"			HM			EXST	EXST	
D228	3'-0"	7'-0"	1 3/4"			HM			EXST	EXST	
D230A	3'-0"	7'-0"	1 3/4"			HM					
D230B	3'-0"	7'-0"	1 3/4"			HM					
D234A	3'-6"	7'-0"	1 3/4"			HM			EXST	EXST	
D234B	3'-6"	7'-0"	1 3/4"			HM			EXST	EXST	
D236	3'-10"	7'-0"	1 3/4"			HM			EXST	EXST	
D240	3'-10"	7'-0"	1 3/4"			HM			EXST	EXST	
D0301	PR. 3'-6"	5'-10"	1 3/4"			HM-1					

SHERLOCK, SMITH & ADAMS, INC.
ARCHITECTS – ENGINEERS
MONTGOMERY, ALABAMA

U.S. NAVAL STATION ROOSEVELT ROADS, P.R.
REPAIRS TO NAVAL HOSPITAL
DOOR SCHEDULE

CONSTR. CONTR. NO. | SPECIFICATION NO. | NAVFAC DRWG. NO. | TF NO.
SHEET ? OF ??

SEAL AREA

DESIGN BY: RAS DRAWN BY: FLT

DIV. DIR.: DATE: SATISFACTORY TO: DATE:

REVISION DESCRIPTION DATE

DEPARTMENT OF THE NAVY
NAVAL FACILITIES ENGINEERING COMMAND
NAVY PUBLIC WORKS CENTER, JACKSONVILLE, FL
U.S. NAVAL STATION ROOSEVELT ROADS, P.R.
REPAIRS TO NAVAL HOSPITAL
DOOR SCHEDULE

PLATE NO.
A4-2

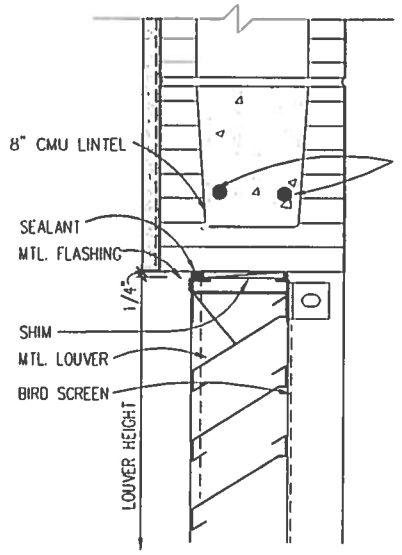

HEAD DETAIL @ ALUMN. LOUVER (1)

SCALE: 3"=1'-0" — A4-3 | A4-3

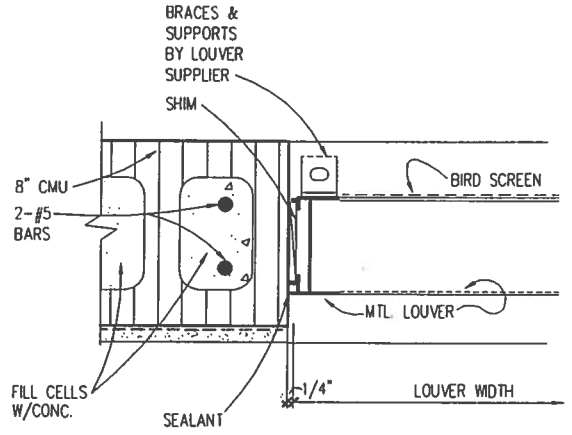

JAMB DETAIL @ ALUMN. LOUVER (2)

SCALE: 3"=1'-0" — A4-3 | A4-3

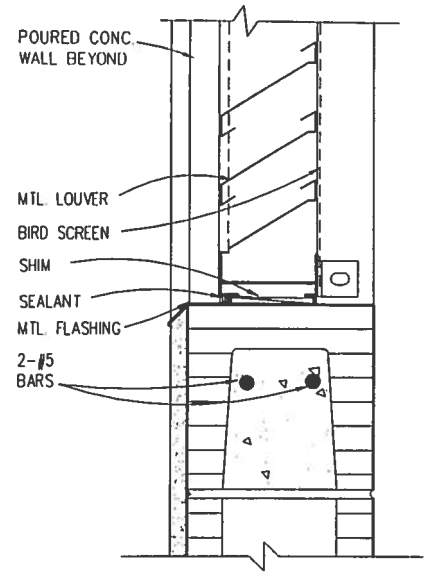

SILL DETAIL @ ALUMN. LOUVER (3)

SCALE: 3"=1'-0" — A4-3 | A4-3

LOUVER SCHEDULE		
MK.	LENGTH	HEIGHT
L1	4'-0"	3'-0"

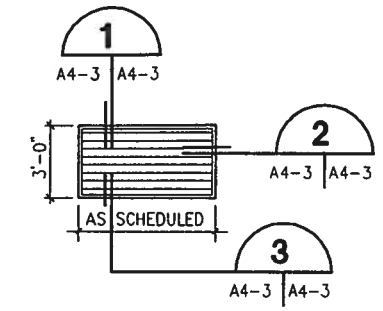

LOUVER SCHEDULE

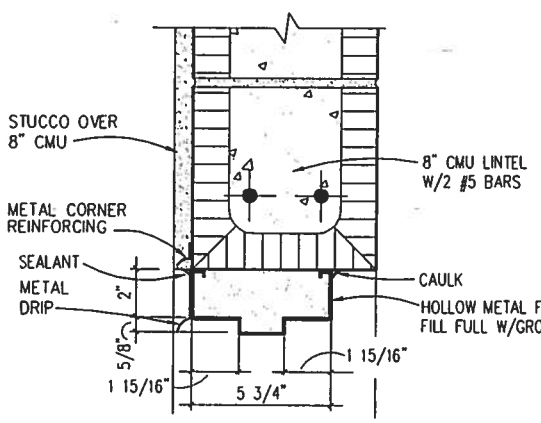

HEAD (4)

SCALE: 3"=1'-0" — A4-2 | A4-3

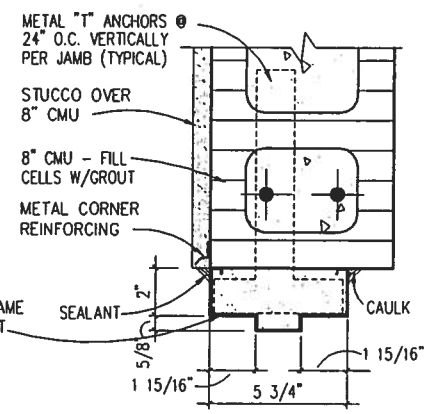

JAMB (5)

SCALE: 3"=1'-0" — A4-2 | A4-3

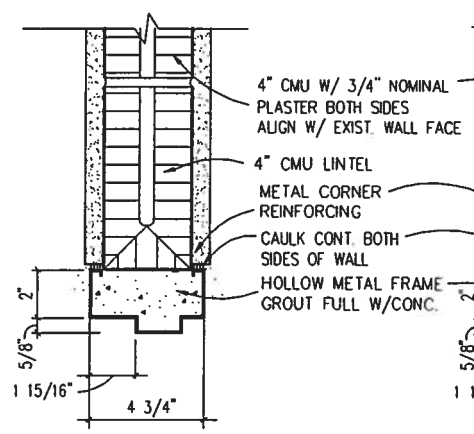

HEAD (6)

SCALE: 3"=1'-0" — A4-1 | A4-3

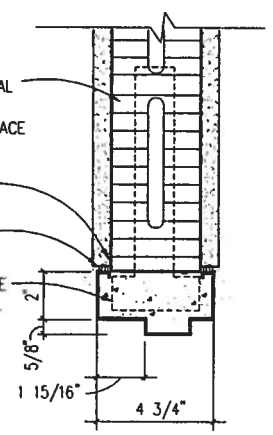

JAMB (7)

SCALE: 3"=1'-0" — A4-1 | A4-3

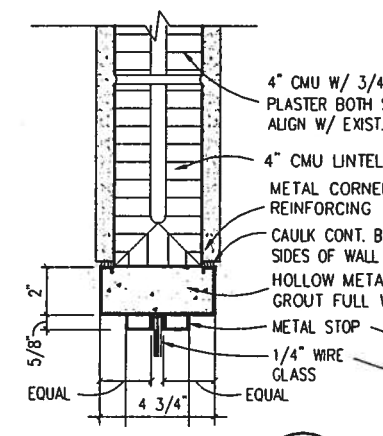

HEAD (SILL SIMILAR) (8)

SCALE: 3"=1'-0" — A5-1 | A4-3

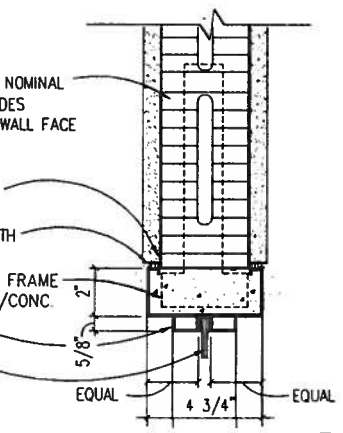

JAMB (9)

SCALE: 3"=1'-0" — A5-1 | A4-3

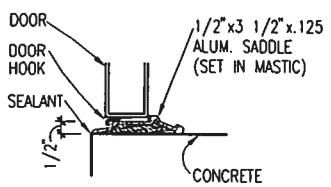

THRESHOLD TYPE 1

N.T.S.

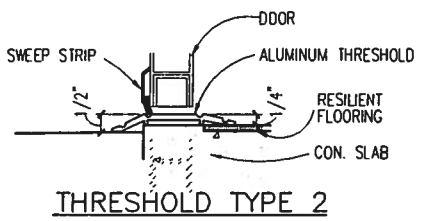

THRESHOLD TYPE 2

N.T.S.

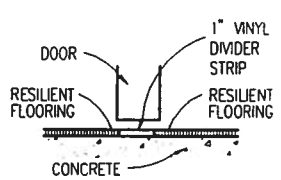

THRESHOLD TYPE 3

N.T.S.

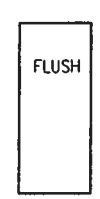

TYPE A

DOOR TYPES

SCALE : 1/4"=1'-0"

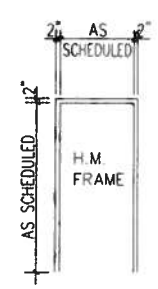

HM-1

FRAME TYPES

SCALE : 1/4"=1'-0"

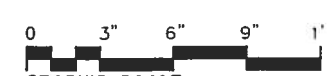

GRAPHIC SCALE 3"=1'-0"

GRAPHIC SCALE 1/4"=1'-0"

SHERLOCK, SMITH & ADAMS, INC.
ARCHITECTS – ENGINEERS
MONTGOMERY, ALABAMA

U.S. NAVAL STATION ROOSEVELT ROADS, P.R.
REPAIRS TO NAVAL HOSPITAL
DOOR, LOUVER & VIEW WINDOW DETAILS

CONSTR. CONTR. NO. | SPECIFICATION NO. | NAVFAC DRWG NO. | TF NO. | SHEET ? OF ??

SEAL AREA

DRAWN BY: RT
DESIGN BY: RAS
DWG. DW. DR.: DATE
SATISFACTORY TO: DATE

REVISION DESCRIPTION | DATE

NAVAL FACILITIES ENGINEERING COMMAND
DEPARTMENT OF THE NAVY
NAVY PUBLIC WORKS CENTER, JACKSONVILLE, FL
U.S. NAVAL STATION ROOSEVELT ROADS, P.R.
REPAIRS TO NAVAL HOSPITAL
DOOR, LOUVER & VIEW WINDOW DETAILS

PLATE NO

A4-3

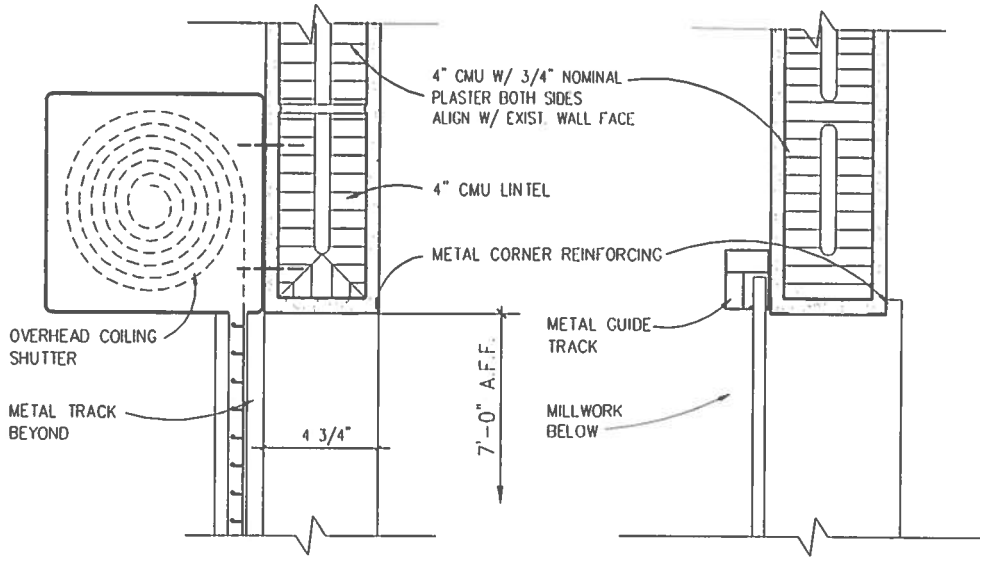

HEAD 1 — A7-1 | A4-4
SCALE: 3"=1'-0"

JAMB 2 — A7-1 | A4-4
SCALE: 3"=1'-0"

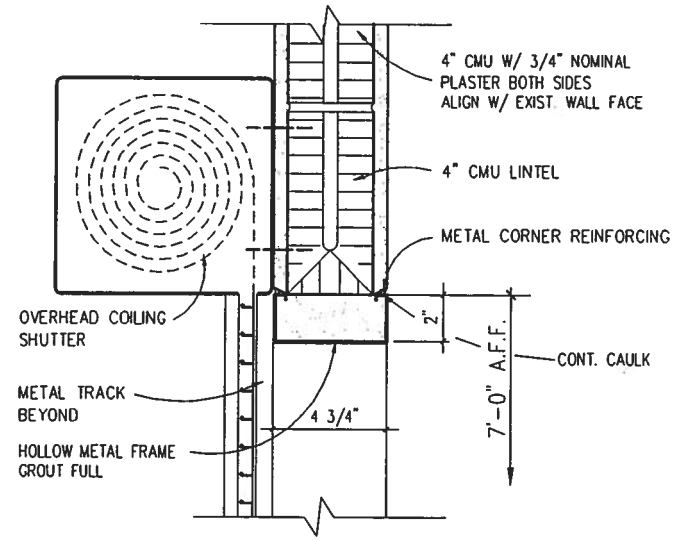

HEAD 3 — A7-1 | A4-4
SCALE: 3"=1'-0"

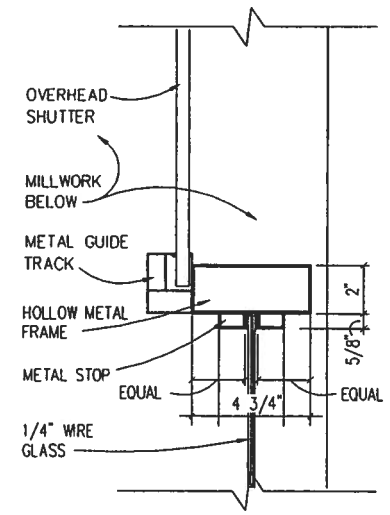

JAMB 4 — A7-1 | A4-4
SCALE: 3"=1'-0"

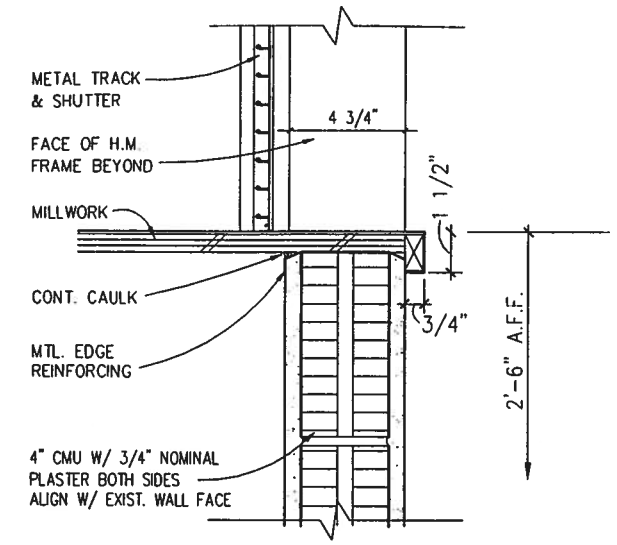

SILL 5 — A7-1 | A4-4
SCALE: 3"=1'-0"

0 3" 6" 9" 1'
GRAPHIC SCALE
3"=1'-0"

SHERLOCK, SMITH & ADAMS, INC.
ARCHITECTS - ENGINEERS
MONTGOMERY, ALABAMA

U.S. NAVAL STATION ROOSEVELT ROADS, P.R.
REPAIRS TO NAVAL HOSPITAL
METAL SHUTTER DETAILS

CONSTR. CONTR. NO. | SPECIFICATION NO. | NAVFAC DRWG. NO. | TF NO. | SHEET ? OF ??

SEAL AREA

REVISION DESCRIPTION | DATE | ENG. DIV. DIR.: DATE: | SATISFACTORY TO: DATE:

DESIGN BY: RAS DRAWN BY: FLT
CHK BY: RAS APPROVED:

DEPARTMENT OF THE NAVY
NAVAL FACILITIES ENGINEERING COMMAND
NAVY PUBLIC WORKS CENTER, JACKSONVILLE, FL
U.S. NAVAL STATION ROOSEVELT ROADS, P.R.
REPAIRS TO NAVAL HOSPITAL
METAL SHUTTER DETAILS

CONSTR. CONTR. NO. | NAVFAC DWG. NO. | PWC DWG. NO.

PLATE NO.
A4-4

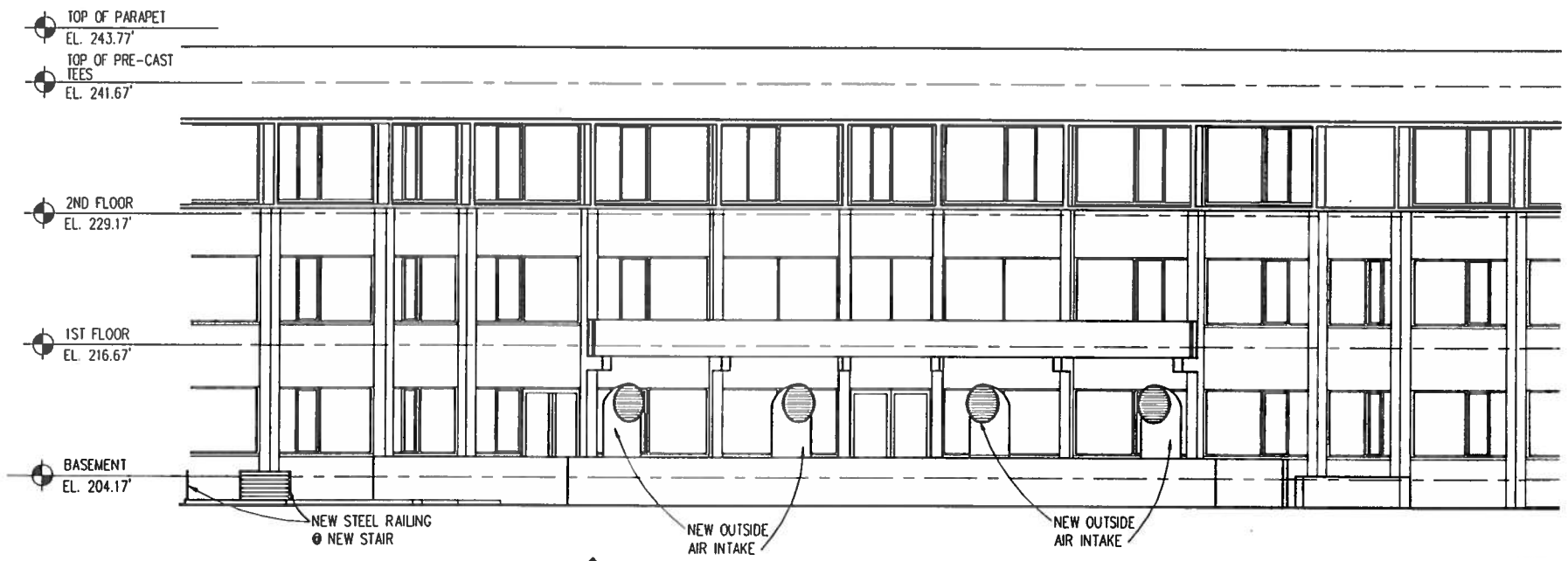

ELEVATION 1 (A2-2, A2-3, A2-4 | A5-1)
SCALE: 1/8" = 1'-0"

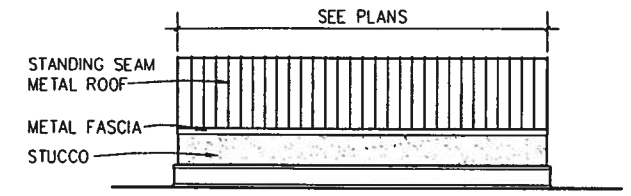

ELEVATION 3 (A2-13 | A5-1)
SCALE: 1/8" = 1'-0"

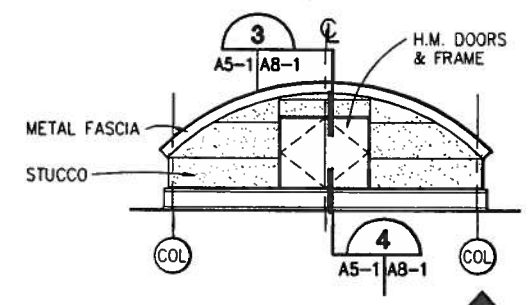

ELEVATION 4 (A2-13 | A5-1)
SCALE: 1/8" = 1'-0"

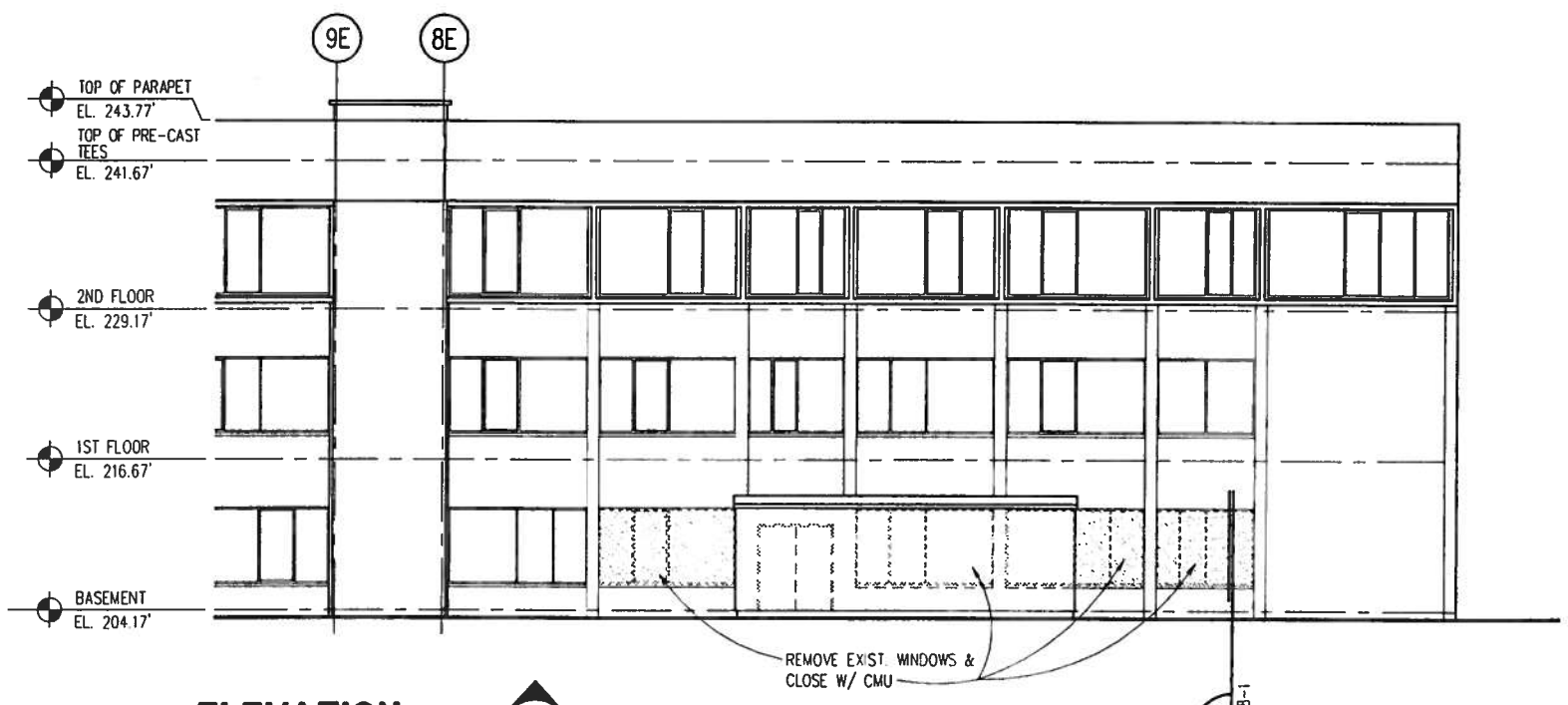

ELEVATION 2 (A2-3 | A5-1)
SCALE: 1/8" = 1'-0"

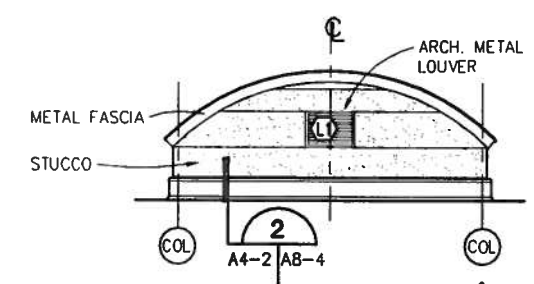

ELEVATION 5 (A2-13 | A5-1)
SCALE: 1/8" = 1'-0"

0 5 10 15 20
GRAPHIC SCALE
1/8"=1'-0"

SHERLOCK, SMITH & ADAMS, INC.
ARCHITECTS – ENGINEERS
MONTGOMERY, ALABAMA

U.S. NAVAL STATION ROOSEVELT ROADS, P.R.
REPAIRS TO NAVAL HOSPITAL
INTERIOR & EXTERIOR ELEVATIONS

CONSTR. CONTR. NO. | SPECIFICATION NO. | NAVFAC DRWG. NO. | TF NO | SHEET ? OF ??

SEAL AREA

DRAWN BY: FLT
DESIGN BY: RAS
DSC. DIV. DIR.: DATE
SATISFACTORY TO: DATE

REVISION DESCRIPTION | DATE

DEPARTMENT OF THE NAVY
NAVAL FACILITIES ENGINEERING COMMAND
NAVY PUBLIC WORKS CENTER, JACKSONVILLE, FL
U.S. NAVAL STATION ROOSEVELT ROADS, P.R.
REPAIRS TO NAVAL HOSPITAL
EXTERIOR ELEVATIONS

PLATE NO.
A5-1

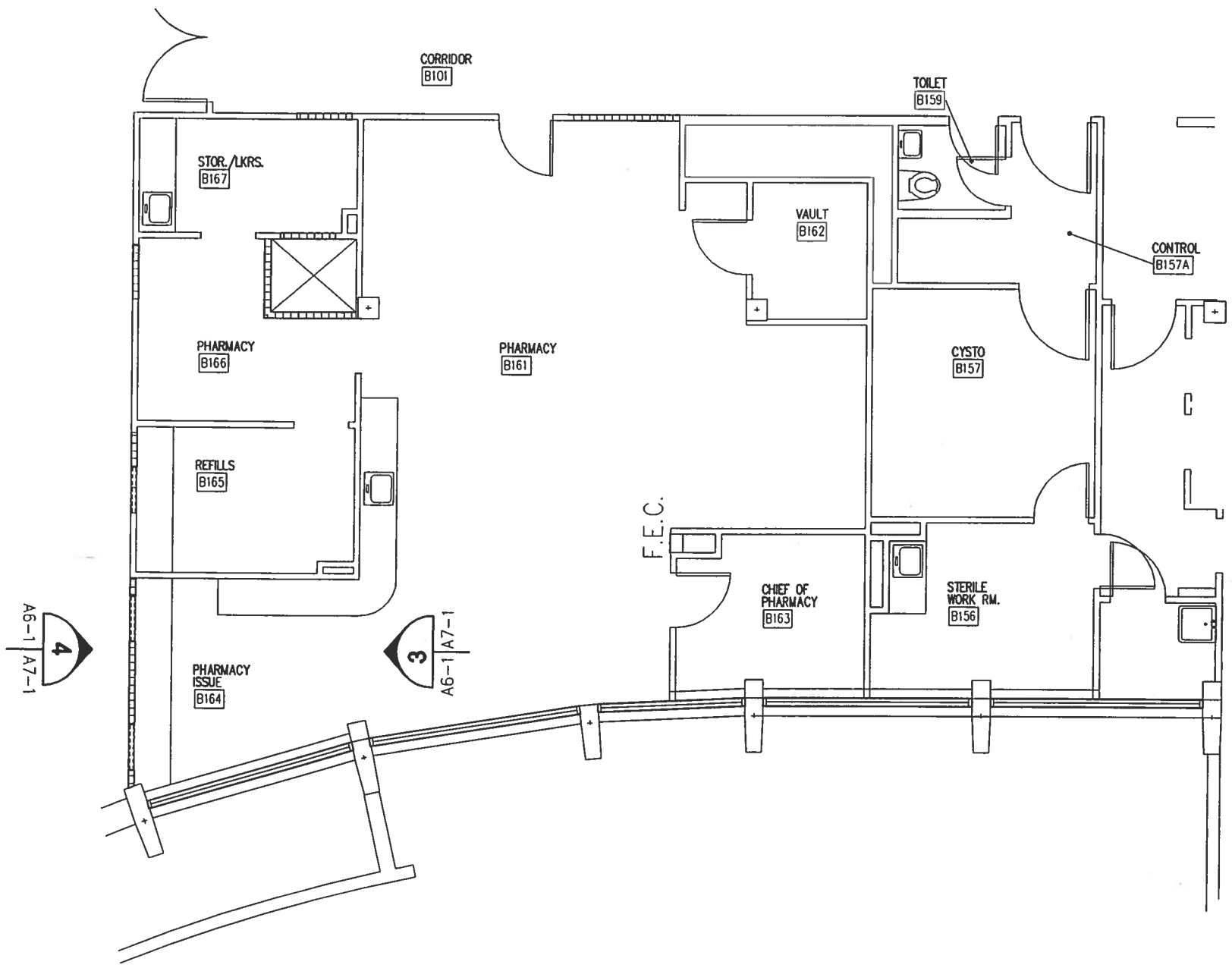

LARGE SCALE PLAN - PHARMACY

LSP1 A2-6 | A6-1

SCALE: 1/4" = 1'-0"

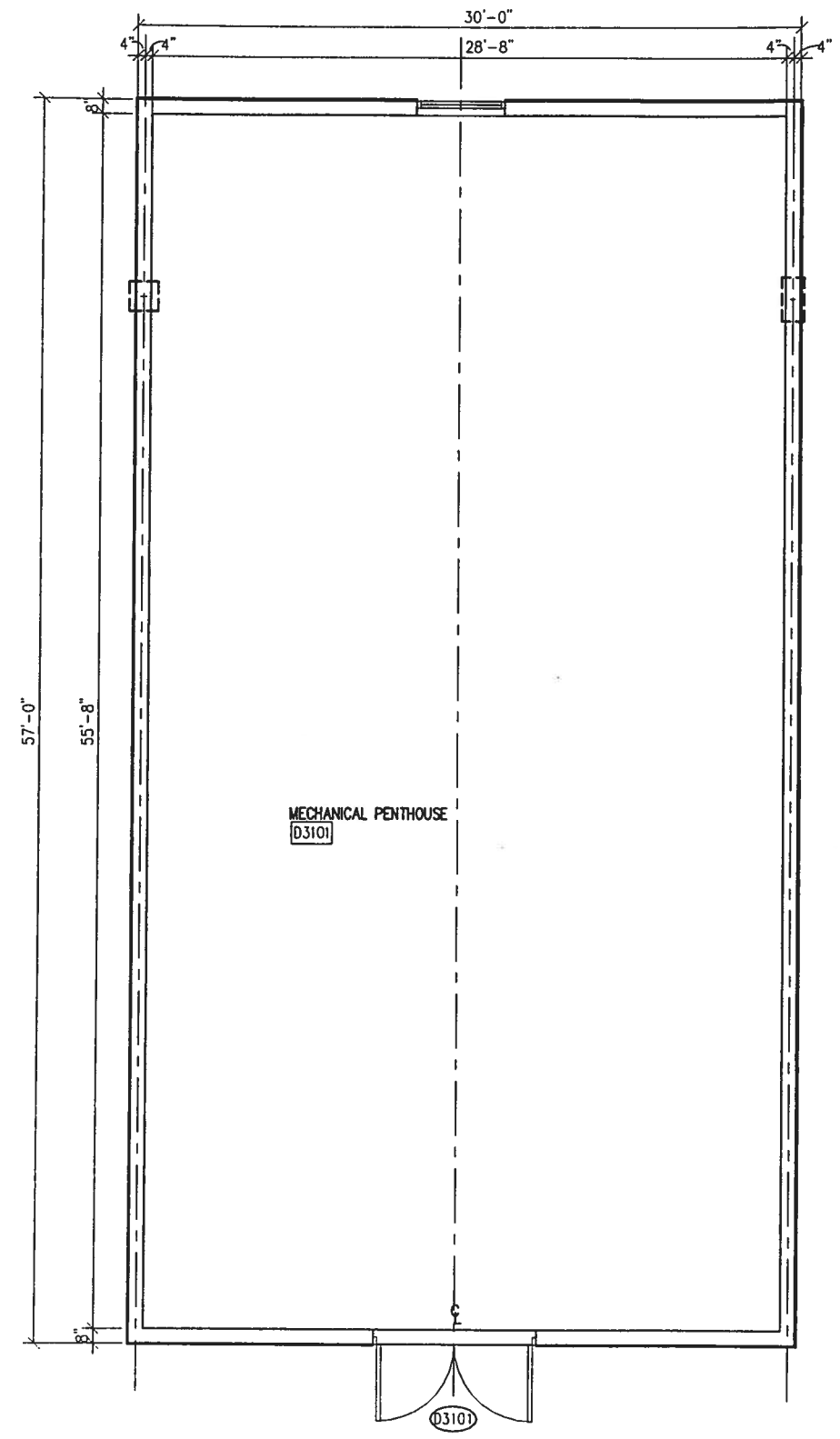

MECHANICAL PENTHOUSE PLAN

LSP2 A2-13 | A6-1

SCALE: 1/4" = 1'-0"

0 5 10 15

GRAPHIC SCALE
1/4" = 1'-0"

SHERLOCK, SMITH & ADAMS, INC.
ARCHITECTS – ENGINEERS
MONTGOMERY, ALABAMA

U.S. NAVAL STATION ROOSEVELT ROADS, P.R.
REPAIRS TO NAVAL HOSPITAL
LARGE SCALE PLANS

CONSTR. CONTR. NO. | SPECIFICATION NO. | NAVFAC DRWG. NO. | TF NO. | SHEET ? OF ??

SEAL AREA

DRAWN BY: FLT
DESIGN BY: RAS
ENG. DIV. DIR.: DATE
SATISFACTORY TO: DATE

REVISION DESCRIPTION	DATE

DEPARTMENT OF THE NAVY
NAVAL FACILITIES ENGINEERING COMMAND
NAVY PUBLIC WORKS CENTER, JACKSONVILLE, FL
U.S. NAVAL STATION ROOSEVELT ROADS, P.R.
REPAIRS TO NAVAL HOSPITAL
LARGE SCALE PLANS

CONSTR. CONTR. NO. | NAVFAC DWG. NO.

PLATE NO.
A6-1