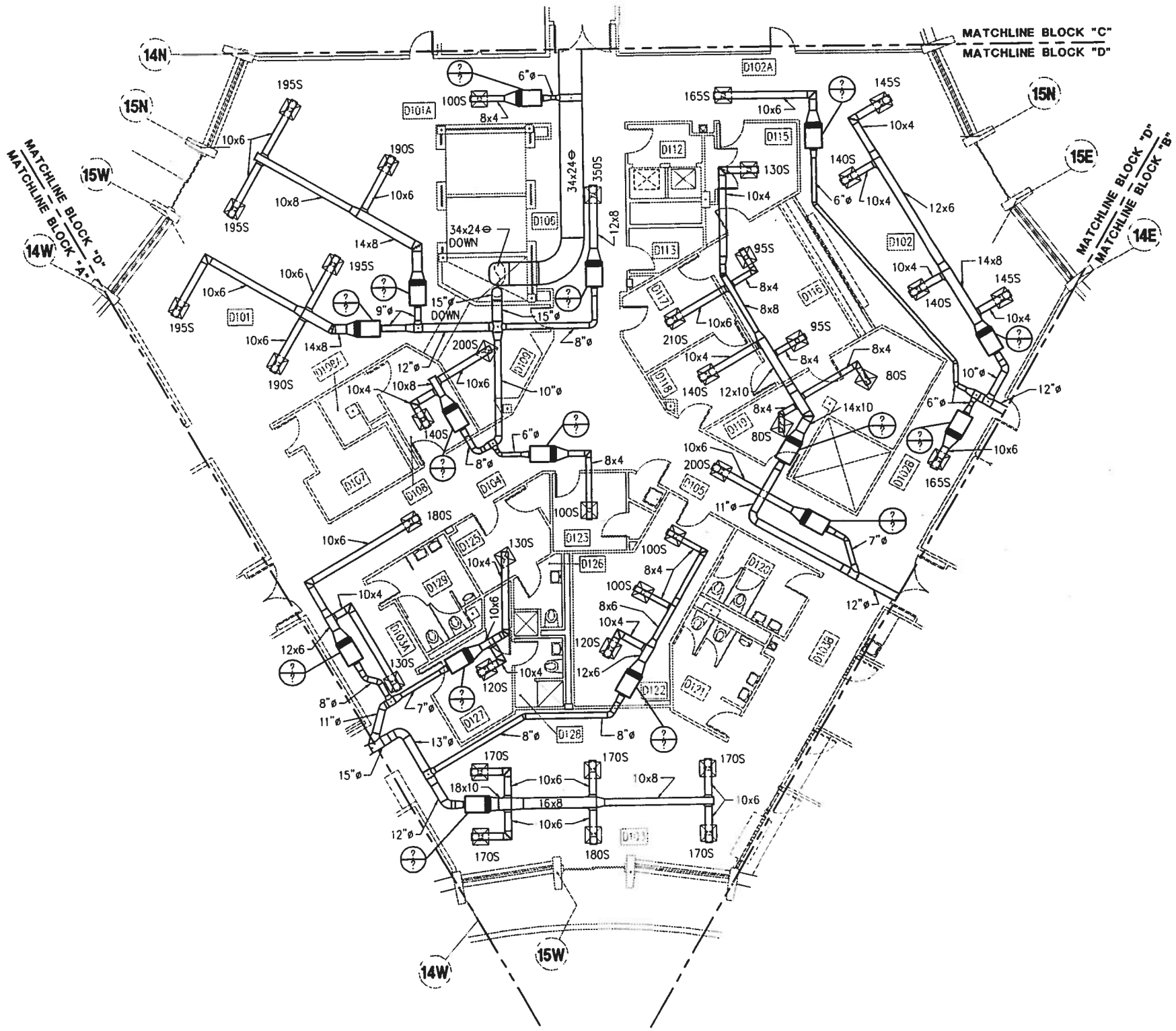

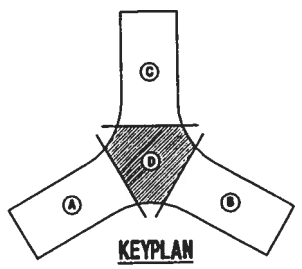

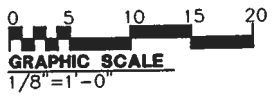

RENOVATION FIRST FLOOR PLAN BLOCK "D"

SCALE: 1/8" = 1'-0"

SHERLOCK, SMITH & ADAMS, INC.
ARCHITECTS – ENGINEERS
MONTGOMERY, ALABAMA

U.S. NAVAL STATION ROOSEVELT ROADS, P.R.
REPAIRS TO NAVAL HOSPITAL
RENOVATION FIRST FLOOR PLAN BLOCK "D"

CONSTR. CONTR. NO. | SPECIFICATION NO. | NAVFAC DRWG. NO. | TF NO | SHEET ? OF ??

SEAL AREA

ENG. DIV. DIR.: DATE:
SATISFACTORY TO: DATE:
DESIGN BY: DUFFEE DRAWN BY: WREN

REVISION DESCRIPTION | DATE

NAVAL FACILITIES ENGINEERING COMMAND
DEPARTMENT OF THE NAVY
NAVY PUBLIC WORKS CENTER, JACKSONVILLE, FL
U.S. NAVAL STATION ROOSEVELT ROADS, P.R.
REPAIRS TO NAVAL HOSPITAL
RENOVATION FIRST FLOOR PLAN BLOCK "D"

PLATE NO
M2-8

PWC #

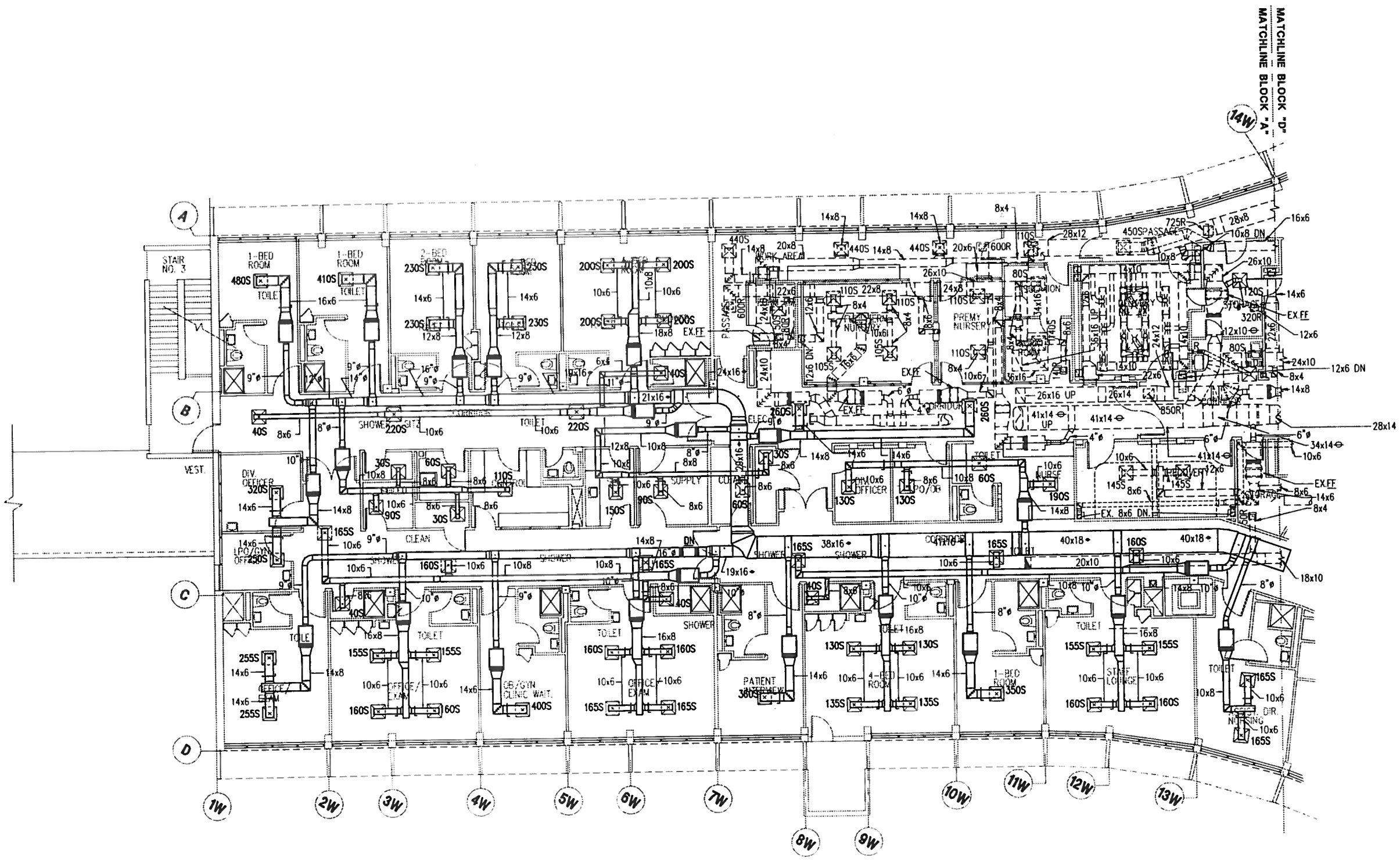

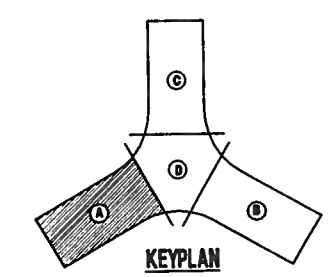

GRAPHIC SCALE
0 5 10 15 20
1/8"=1'-0"

RENOVATION SECOND FLOOR PLAN BLOCK "A"

SCALE: 1/8" = 1'-0"

SHERLOCK, SMITH & ADAMS, INC.
ARCHITECTS - ENGINEERS
MONTGOMERY, ALABAMA

U.S. NAVAL STATION ROOSEVELT ROADS, P.R.
REPAIRS TO NAVAL HOSPITAL
RENOVATION SECOND FLOOR PLAN BLOCK "A"

CONSTR. CONTR. NO. | SPECIFICATION NO. | NAVFAC DRWG. NO. | TF NO. | SHEET ? OF ??

SEAL AREA

DESIGN BY: DUFFEE DRAWN BY: JOINER

ENG. DIV. DIR.: DATE: SATISFACTORY TO: DATE:

REVISION DESCRIPTION | DATE

NAVAL FACILITIES ENGINEERING COMMAND
DEPARTMENT OF THE NAVY
NAVY PUBLIC WORKS CENTER, JACKSONVILLE, FL
U.S. NAVAL STATION ROOSEVELT ROADS, P.R.
REPAIRS TO NAVAL HOSPITAL
RENOVATION SECOND FLOOR PLAN BLOCK "A"

PLATE NO. M2-9

PWC #

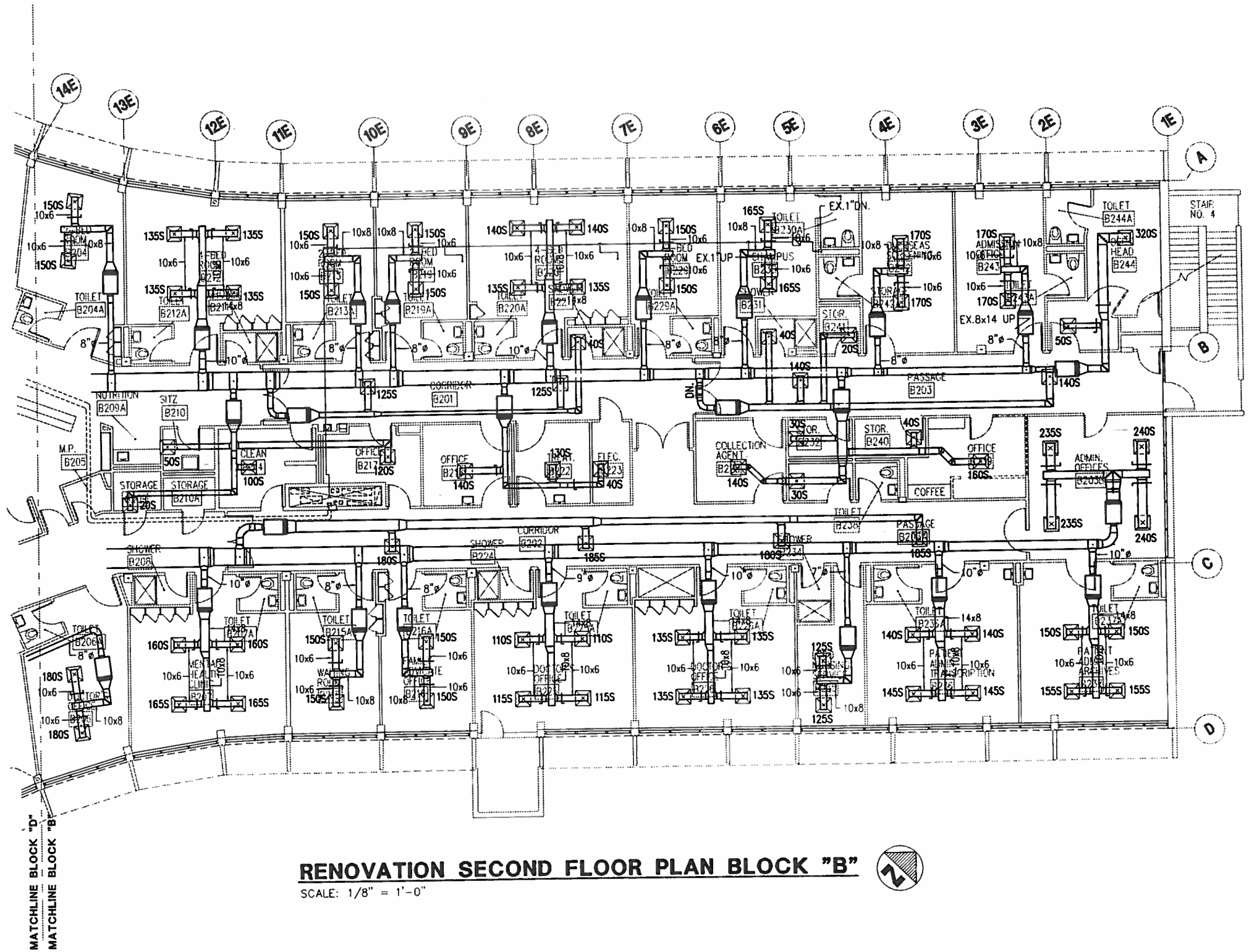

RENOVATION SECOND FLOOR PLAN BLOCK "B"

SCALE: 1/8" = 1'-0"

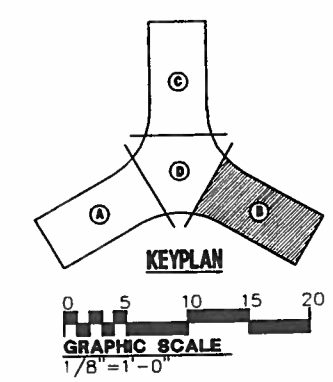

SEAL AREA

ENG. DIV. DIR.: DATE: SATISFACTORY TO: DATE:

DESIGN BY: DUFFEE DRAWN BY: AUTERY

REVISION DESCRIPTION	DATE

DEPARTMENT OF THE NAVY
NAVAL FACILITIES ENGINEERING COMMAND
NAVY PUBLIC WORKS CENTER, JACKSONVILLE, FL

U.S. NAVAL STATION ROOSEVELT ROADS, P.R.
REPAIRS TO NAVAL HOSPITAL
RENOVATION SECOND FLOOR PLAN BLOCK "B"

SHERLOCK, SMITH & ADAMS, INC.
ARCHITECTS – ENGINEERS
MONTGOMERY, ALABAMA

U.S. NAVAL STATION ROOSEVELT ROADS, P.R.
REPAIRS TO NAVAL HOSPITAL
RENOVATION SECOND FLOOR PLAN BLOCK "B"

CONSTR. CONTR. NO. | SPECIFICATION NO. | NAVFAC DRWG. NO. | TF NO | SHEET ? OF ??

PLATE NO. **M2-10**

PWC #

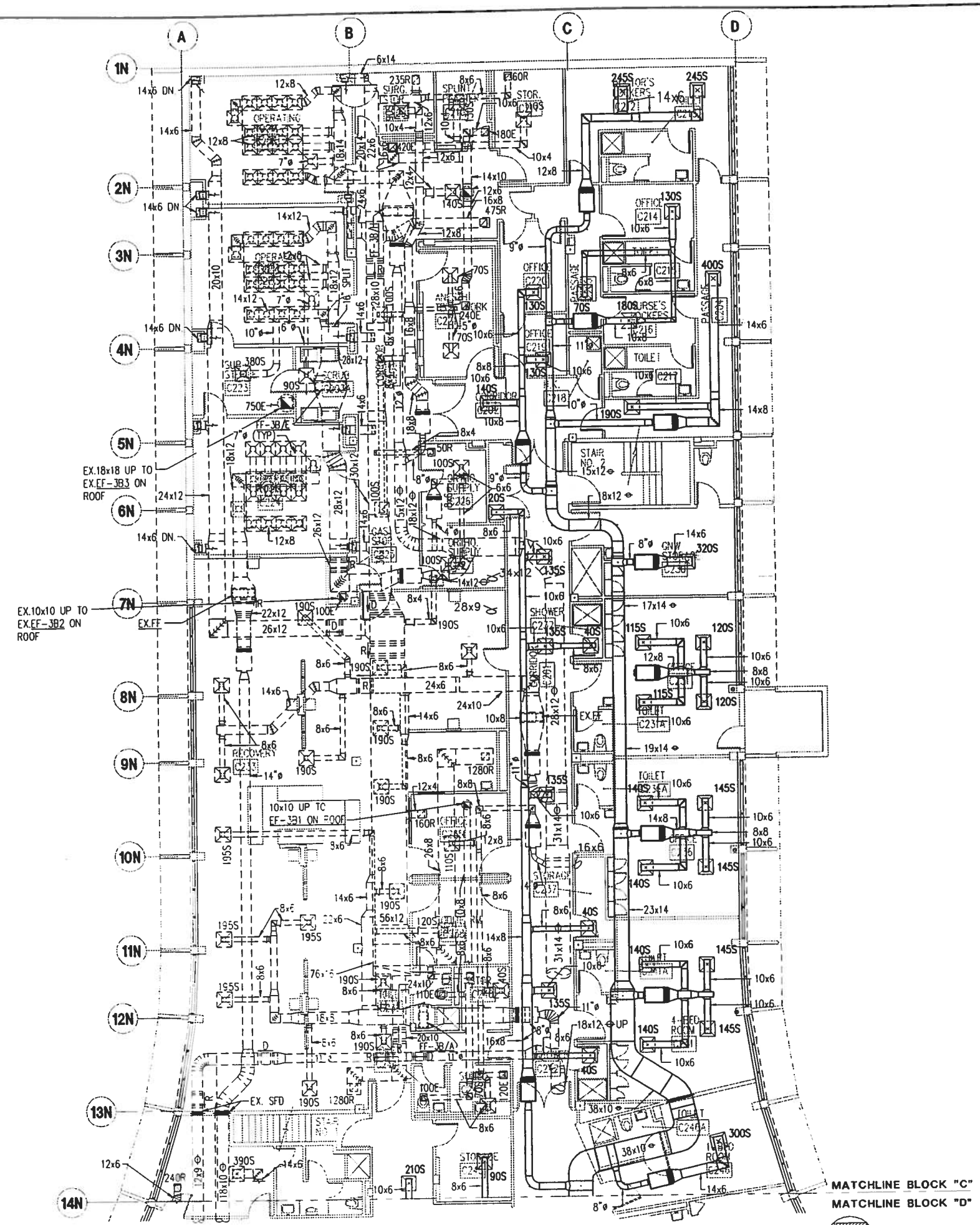

RENOVATION SECOND FLOOR PLAN BLOCK "C"

SCALE: 1/8" = 1'-0"

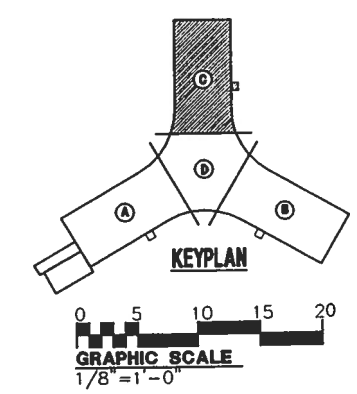

SHERLOCK, SMITH & ADAMS, INC.
ARCHITECTS – ENGINEERS
MONTGOMERY, ALABAMA

U.S. NAVAL STATION ROOSEVELT ROADS, P.R.
REPAIRS TO NAVAL HOSPITAL
RENOVATION SECOND FLOOR PLAN BLOCK "C"

CONSTR. CONTR. NO. | SPECIFICATION NO. | NAVFAC DRWG. NO. | TF NO. | SHEET ? OF ??

SEAL AREA

ENG. DIV. DIR.: | DATE: | SATISFACTION TO: | DATE:

DESIGN BY: DUFFEE DRAWN BY: JONER
CHK BY: YWING APPROVED:

REVISION DESCRIPTION | DATE

NAVAL FACILITIES ENGINEERING COMMAND
DEPARTMENT OF THE NAVY
NAVY PUBLIC WORKS CENTER, JACKSONVILLE, FL
U.S. NAVAL STATION ROOSEVELT ROADS, P.R.
REPAIRS TO NAVAL HOSPITAL
RENOVATION SECOND FLOOR PLAN BLOCK "C"

PLATE NO.
M2-11

PWC #

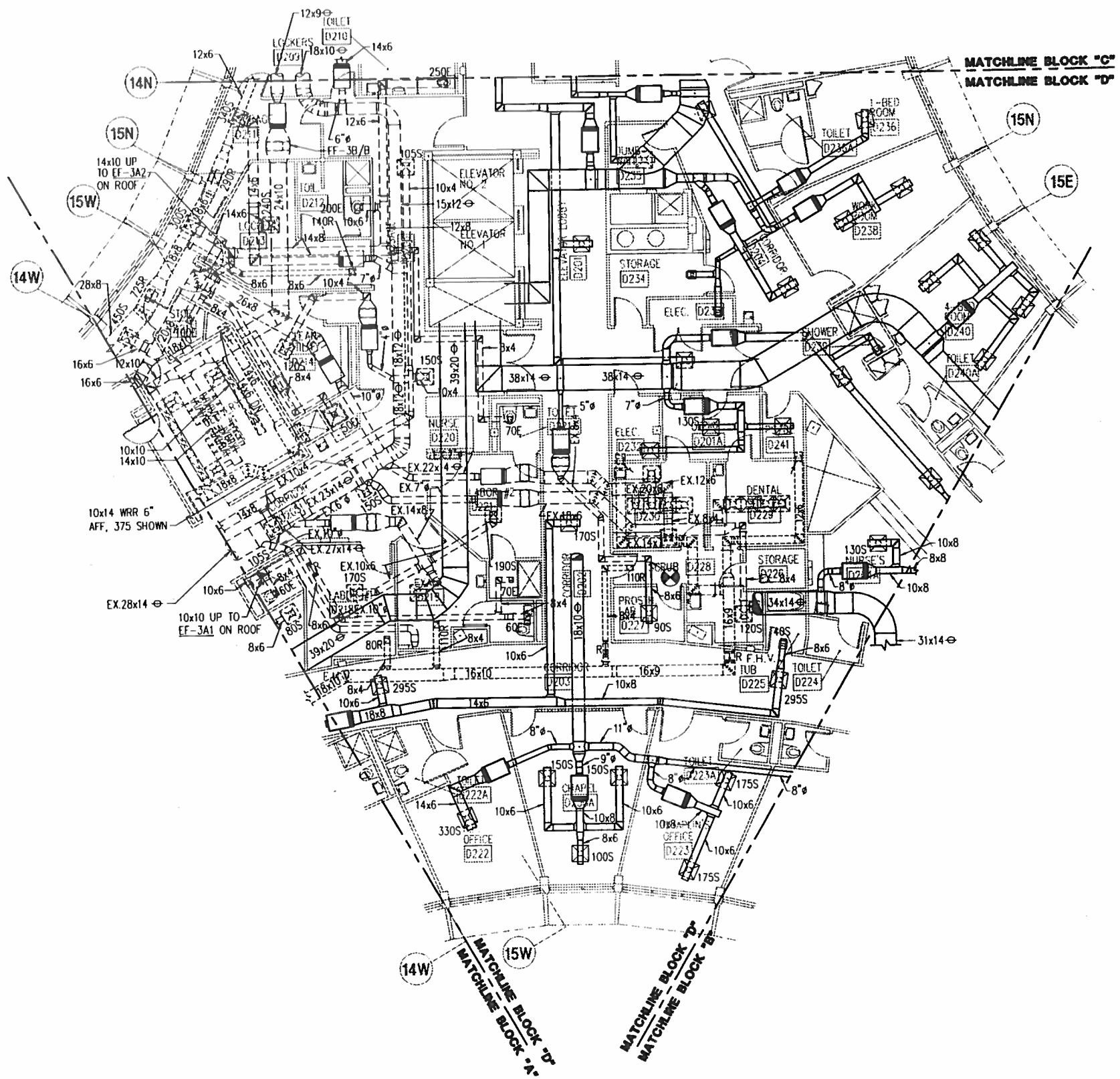

RENOVATION SECOND FLOOR PLAN BLOCK "D"

SCALE: 1/8" = 1'-0"

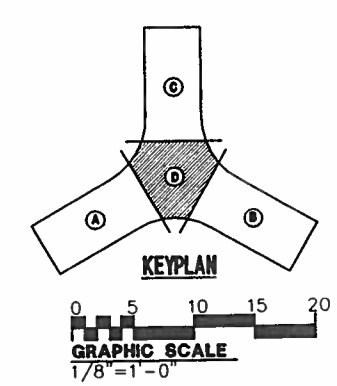

SHERLOCK, SMITH & ADAMS, INC.
ARCHITECTS – ENGINEERS
MONTGOMERY, ALABAMA

U.S. NAVAL STATION ROOSEVELT ROADS, P.R.
REPAIRS TO NAVAL HOSPITAL
RENOVATION SECOND FLOOR PLAN BLOCK "D"

CONSTR. CONTR. NO. | SPECIFICATION NO. | NAVFAC DRWG. NO. | TF NO. | SHEET ? OF ??

PLATE NO. M2-12

PWC #

SEAL AREA

ENG. DIV. DIR.: DATE: SATISFACTORY TO: DATE: DESIGN BY: DUFFEE DRAWN BY: JOINER

REVISION DESCRIPTION | DATE

NAVAL FACILITIES ENGINEERING COMMAND
DEPARTMENT OF THE NAVY
NAVY PUBLIC WORKS CENTER, JACKSONVILLE, FL
U.S. NAVAL STATION ROOSEVELT ROADS, P.R.
REPAIRS TO NAVAL HOSPITAL
RENOVATION SECOND FLOOR PLAN BLOCK "D"

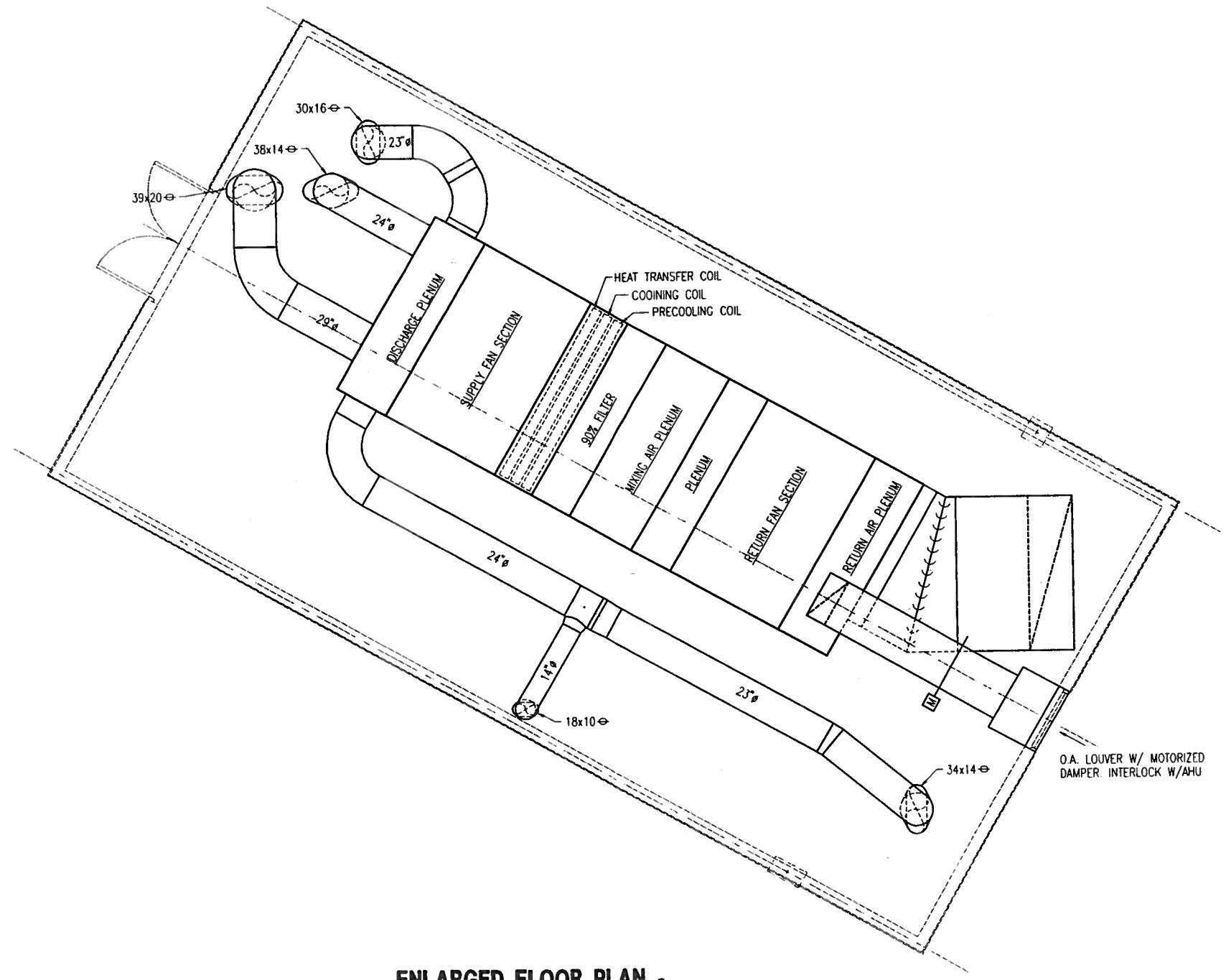

ENLARGED FLOOR PLAN - PENTHOUSE BLOCK "D"

SCALE: 1/4"=1'-0"

SEAL AREA

ENG. DIV. DIR.: DATE:

SATISFACTORY TO: DATE:

APPROV. BY: DRAWN BY: T.M.M.D.

REVISION DESCRIPTION	DATE

DEPARTMENT OF THE NAVY — NAVAL FACILITIES ENGINEERING COMMAND

NAVY PUBLIC WORKS CENTER, JACKSONVILLE, FL

U.S. NAVAL STATION ROOSEVELT ROADS, P.R.

REPAIRS TO NAVAL HOSPITAL

ENLARGED FLOOR PLAN – PENTHOUSE BLOCK "D"

SHERLOCK, SMITH & ADAMS, INC.
ARCHITECTS – ENGINEERS
MONTGOMERY, ALABAMA

U.S. NAVAL STATION ROOSEVELT ROADS, P.R.

REPAIRS TO NAVAL HOSPITAL

ENLARGED FLOOR PLAN – PENTHOUSE BLOCK "D"

CONSTR. CONTR. NO.	SPECIFICATION NO.	NAVFAC DRWG. NO.	TF NO	SHEET ? OF ??

PLATE NO.

M4-1

PWC #

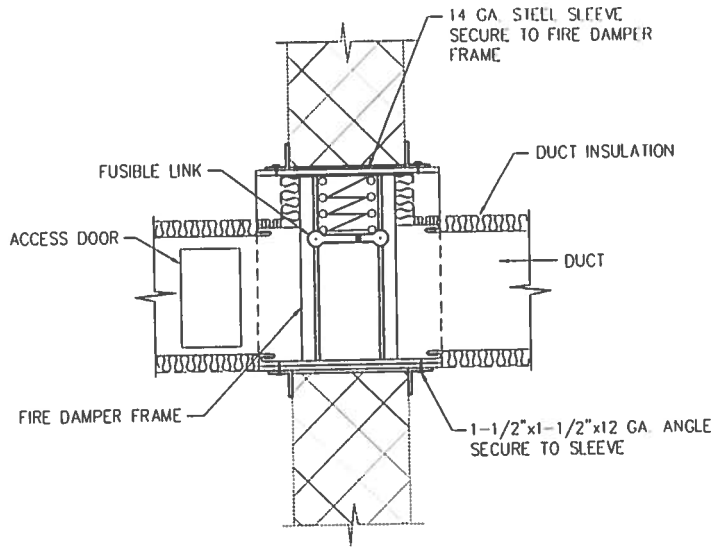

HORIZONTAL LOW PRESSURE DUCT FIRE DAMPER (INSULATED DUCT)

1 / TYP. M7-1

NOT TO SCALE

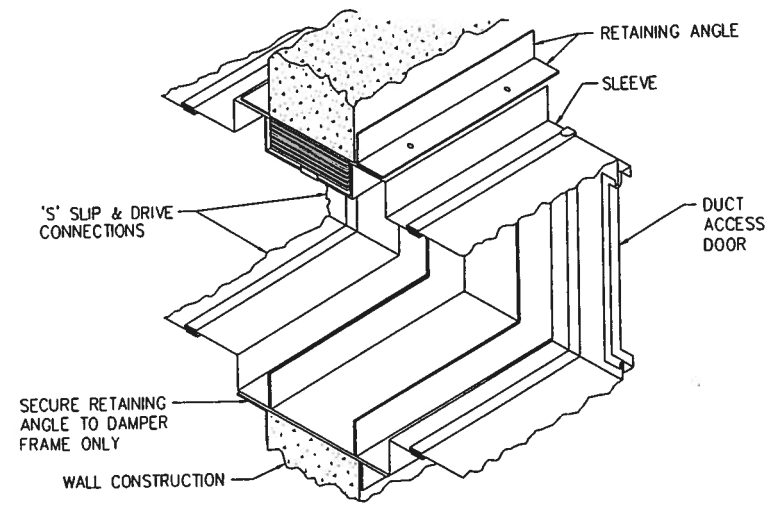

HORIZONTAL LOW PRESSURE FIRE DAMPER DETAIL (NON-INSULATED DUCT)

2 / TYP. M7-1

NOT TO SCALE

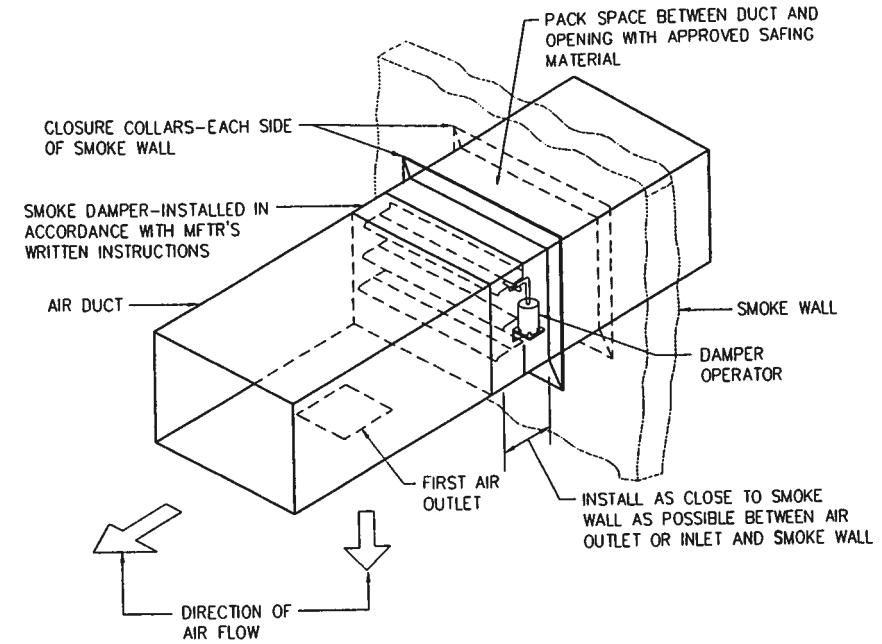

HORIZONTAL LOW PRESSURE SMOKE DAMPER

3 / TYP. M7-1

NOT TO SCALE

NOTE:

LISTED COMBINATION SMOKE/FIRE DAMPER MAY BE USED IN LIEU OF INDIVIDUAL DAMPERS.

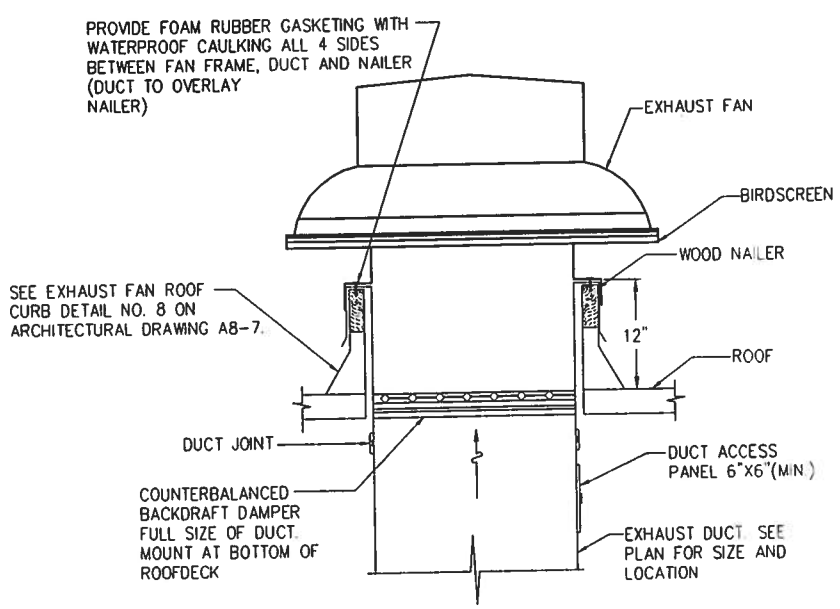

EXHAUST FAN

4 / TYP. M7-1

NOT TO SCALE

DESIGN NOTES

1. DUCT ACCESS SHOULD BE AS BIG AS DUCT WILL ALLOW TO GIVE ACCESS TO DAMPER. SHOW SIZE ON PLAN.
2. IF FAN IS DIRECT DRIVE AND EXHAUSTING CONDITIONED AIR, PROVIDE A BALANCING DAMPER.

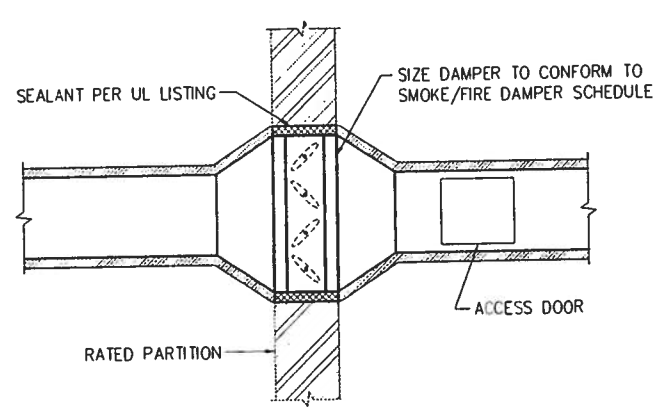

SMOKE/FIRE DAMPERS IN MEDIUM PRESSURE DUCT

5 / TYP. M7-1

NOT TO SCALE

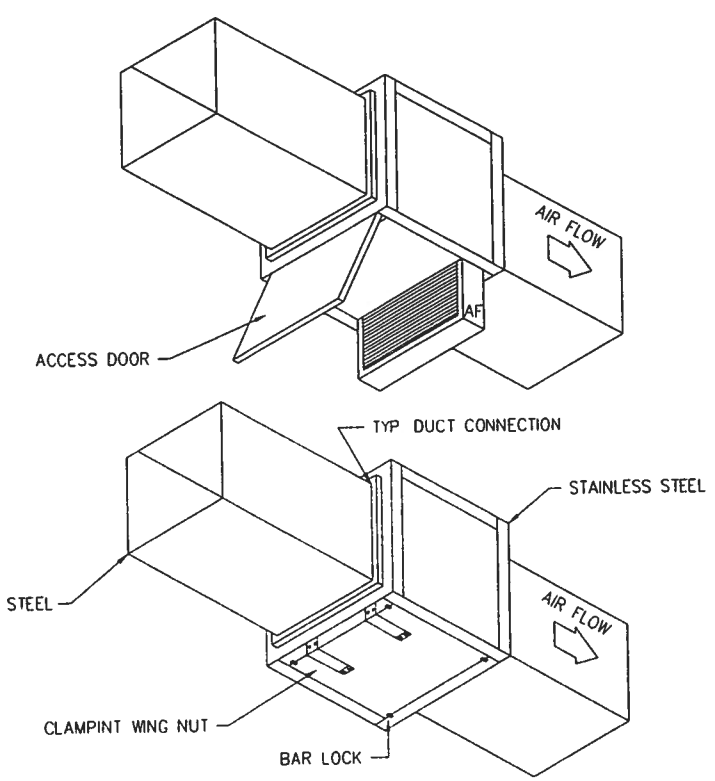

DUCT MOUNTED FILTER

4 / M2-1, M2-2, M2-3 / M7-1

NOT TO SCALE

SMOKE/FIRE DAMPER (SFD)

LOCATION	UL LEAKAGE CLASS	MAX. LEAKAGE @ 1" W.C.	MAX LEAKAGE @ 4" W.C.	TEMPERATURE CLASSIFICATION	* MAX. LOSS IN INCHES WG	FUSIBLE LINK TEMP °F.	DAMPER TYPE	REMARKS
MED. PRESSURE SUPPLY	1	4 CFM/ SQ. FT	8 CFM/ SQ. FT	350°F	0.11 @ 2,500 FPM	165	AIRFOIL BLADES	
LOW PRESSURE SUPPLY & RETURN	1	4 CFM/ SQ. FT		350°F	0.05 @ 1,200 FPM	165	–	

SHERLOCK, SMITH & ADAMS, INC.
ARCHITECTS – ENGINEERS
MONTGOMERY, ALABAMA

U.S. NAVAL STATION ROOSEVELT ROADS, P.R.
REPAIRS TO NAVAL HOSPITAL
DETAILS

CONSTR. CONTR. NO. | SPECIFICATION NO. | NAVFAC DRWG. NO. | TF NO. | SHEET ? OF ??

SEAL AREA

DESIGN BY: DUFFEE DRAWN BY: AUTERY
ENG. DIV. DIR.: DATE: SATISFACTORY TO: DATE:
REVISION DESCRIPTION | DATE

NAVAL FACILITIES ENGINEERING COMMAND
DEPARTMENT OF THE NAVY
NAVY PUBLIC WORKS CENTER, JACKSONVILLE, FL
U.S. NAVAL STATION ROOSEVELT ROADS, P.R.
REPAIRS TO NAVAL HOSPITAL
DETAILS

PLATE NO. M7-1

PWC #

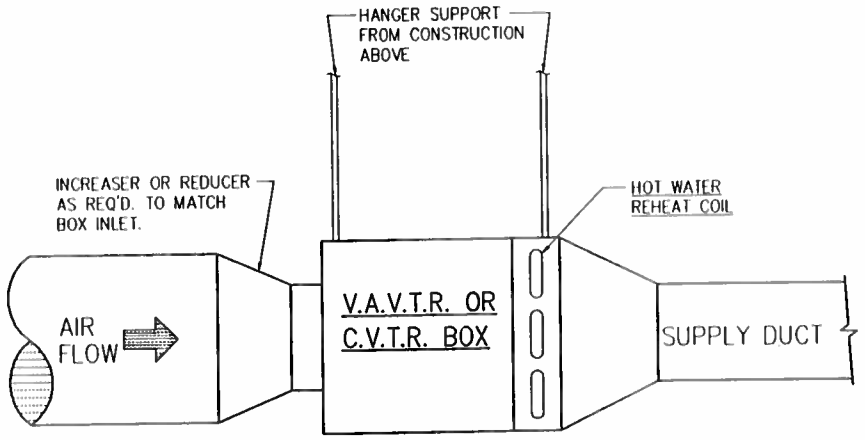

V.A.V.T.R. OR C.V.T.R. BOX CONFIGURATION (1 / TYP. M7-2)

NOT TO SCALE

NOTE :
REHEAT HOT WATER PIPING SHALL BE SUPPORTED INDEPENDENT OF C.V.T.R. BOX.

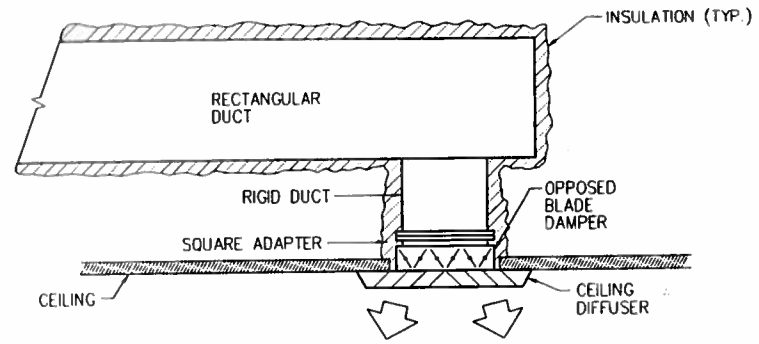

CEILING DIFFUSER CONNECTION (2 / TYP. M7-2)

NOT TO SCALE

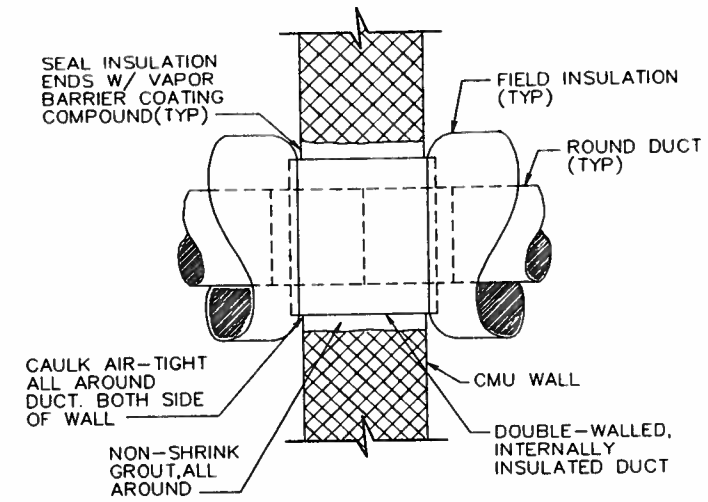

INSULATED ROUND DUCT PENETRATION (3 / TYP. M7-2)

NOT TO SCALE

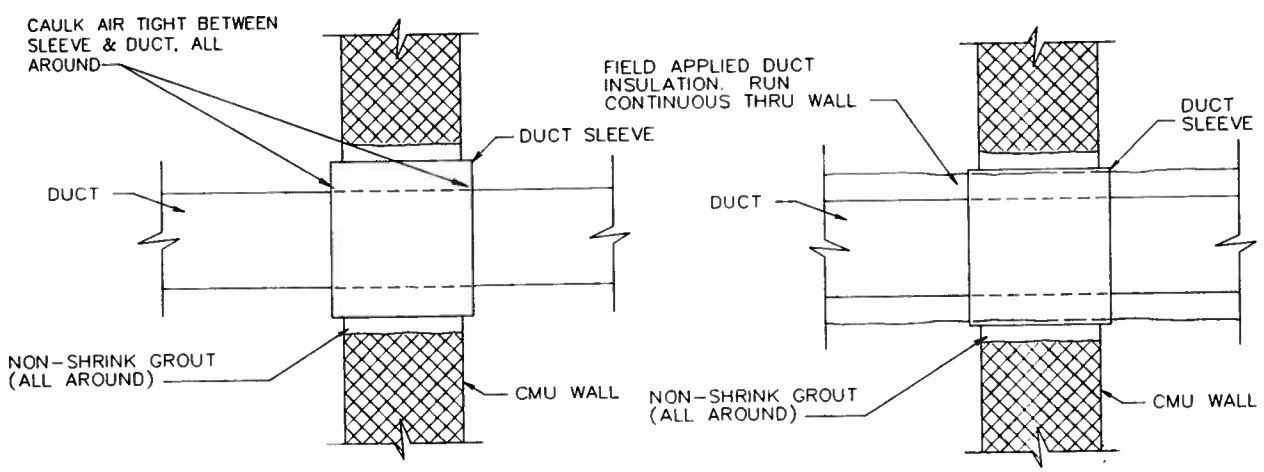

UNINSULATED

INSULATED

RECTANGULAR DUCT PENETRATION OF WALL (4 / TYP. M7-2)

NOT TO SCALE

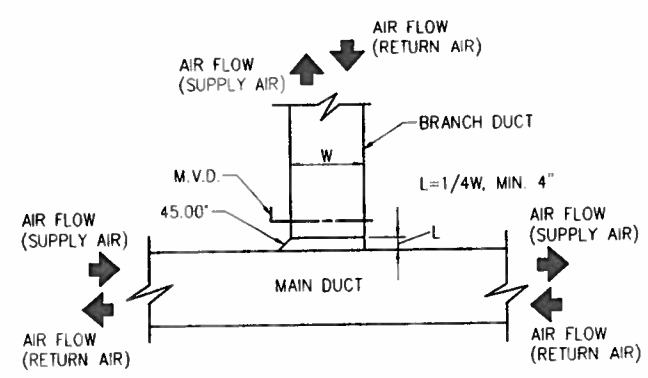

SUPPLY AND RETURN AIR DUCT BRANCH CONNECTION (5 / TYP. M7-2)

NOT TO SCALE

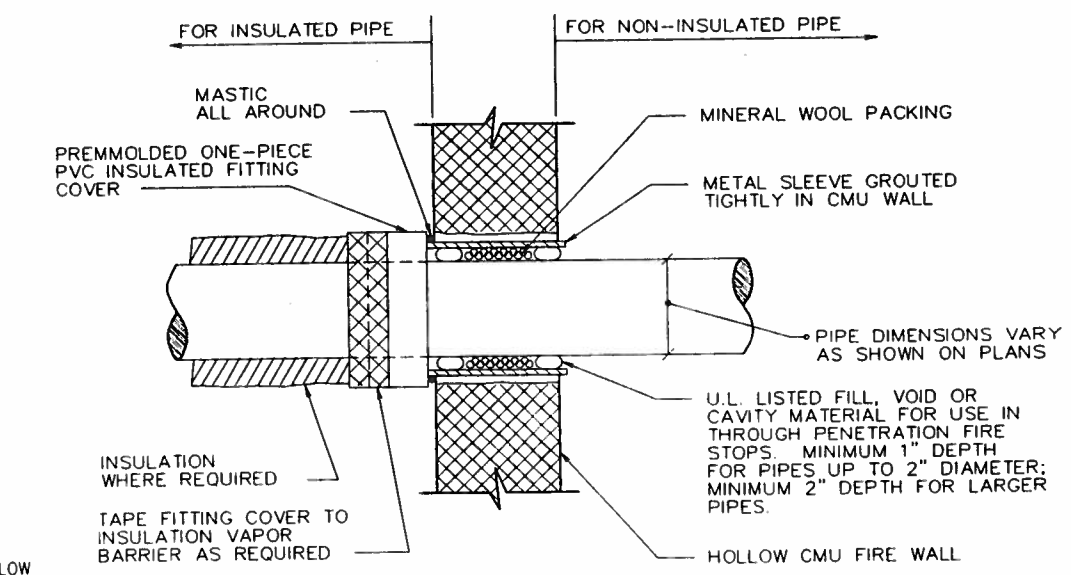

NOTE:
DETAIL ILLUSTRATES PIPE INSULATION ON ONE SIDE OF FIRE RATED WALL. WHERE PIPE IS REQUIRED TO BE INSULATED ON BOTH SIDES, THE INSULATION END TREATMENT SHALL BE DUPLICATED ON BOTH SIDES.

PIPE PENETRATION OF FIRE WALL (6 / TYP. M7-2)

NOT TO SCALE

SHERLOCK, SMITH & ADAMS, INC.
ARCHITECTS - ENGINEERS
MONTGOMERY, ALABAMA

U.S. NAVAL STATION ROOSEVELT ROADS, P.R.
REPAIRS TO NAVAL HOSPITAL
DETAILS

CONSTR. CONTR. NO. | SPECIFICATION NO. | NAVFAC DRWG. NO. | TF NO. | SHEET ? OF ??

SEAL AREA

ENG. DIV. DIR.: DATE: SATISFACTORY TO: DATE:

DESIGN BY: DUFFEE DRAWN BY: AUTERY

REVISION DESCRIPTION | DATE

NAVAL FACILITIES ENGINEERING COMMAND
DEPARTMENT OF THE NAVY
NAVY PUBLIC WORKS CENTER, JACKSONVILLE, FL
U.S. NAVAL STATION ROOSEVELT ROADS, P.R.
REPAIRS TO NAVAL HOSPITAL
DETAILS

PLATE NO. M7-2

PWC #

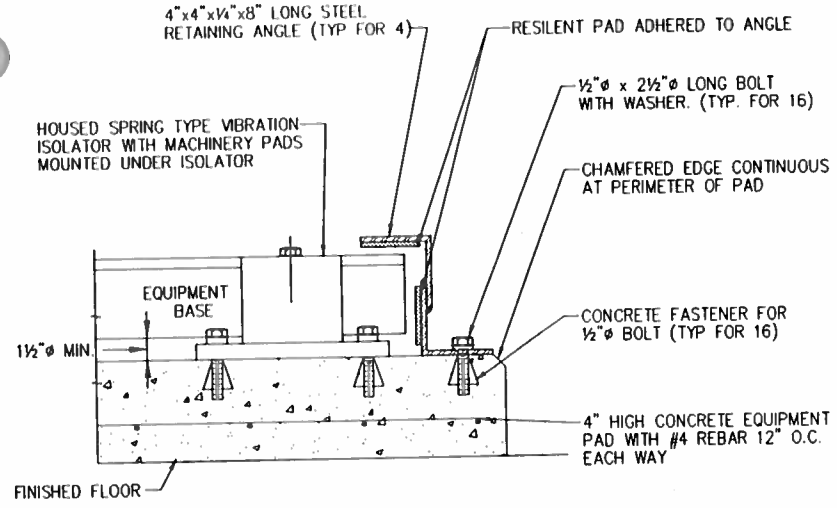

VIBRATION ISOLATOR (BASE) 1 TYP. M7-3
NOT TO SCALE

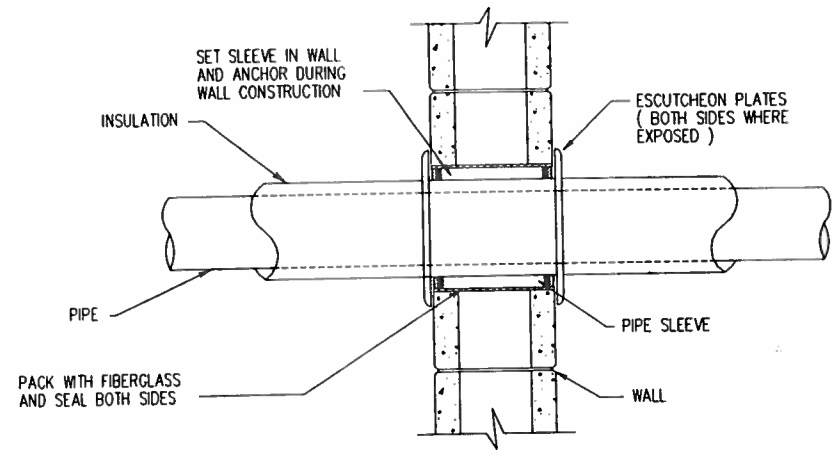

PIPE SLEEVE THRU EXISTING INTERIOR WALL 5 TYP. M7-3
NOT TO SCALE

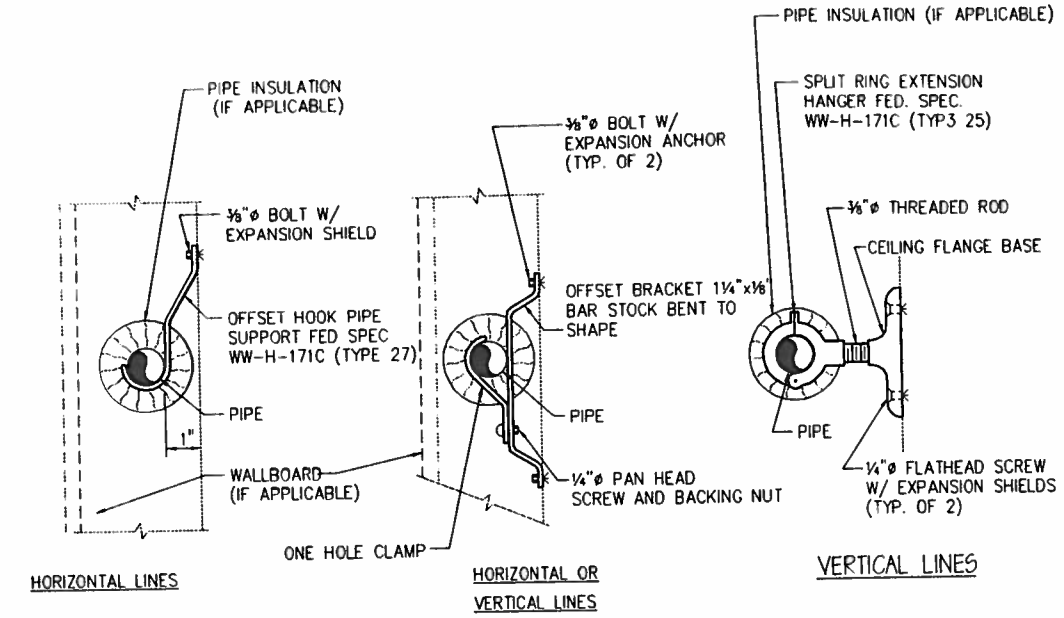

WALL SUPPORTS 3 TYP. M7-3

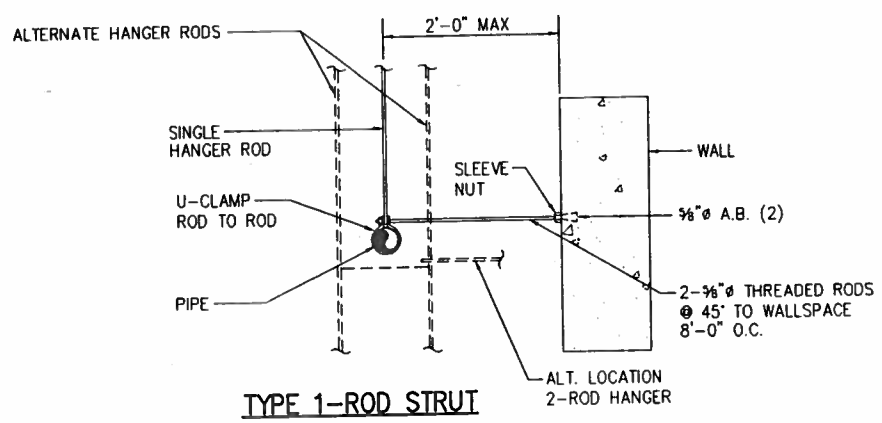

TYPE 1-ROD STRUT

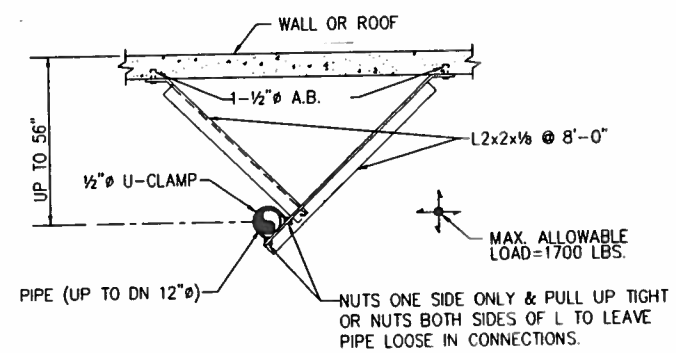

VERTICAL & HORIZONTAL SUPPORT PARALLEL TO HORIZONTAL PIPE 4 TYP. M7-3

NOTE: AT ROOF BRACING WILL BE BOLTED TO ANGLE IRON IN LIEU OF CONC. ANGLE IRON SHALL BE SPANNED BETWEEN BAR JOISTS.

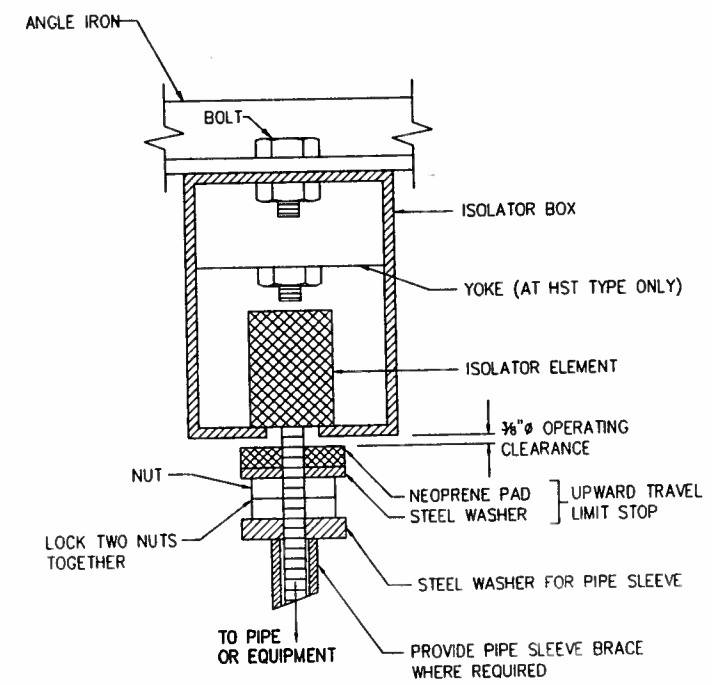

NOTES:

1. DETAIL APPLIES TO TYPE HN, HS OR HST VIBRATION ISOLATION HANGERS.
2. TYPE VERTICAL TRAVEL LIMIT STOP AFTER SYSTEM IS OPERATIONAL.
3. ADJUST TRAVEL LIMIT STOP AFTER SYSTEM IS OPERATIONAL.
4. UPWARD TRAVEL LIMIT STOP MUST NOT SHORT CIRCUIT ISOLATOR OR REDUCE ISOLATOR PERFORMANCE

VIBRATION ISOLATOR 7 TYP. M7-3

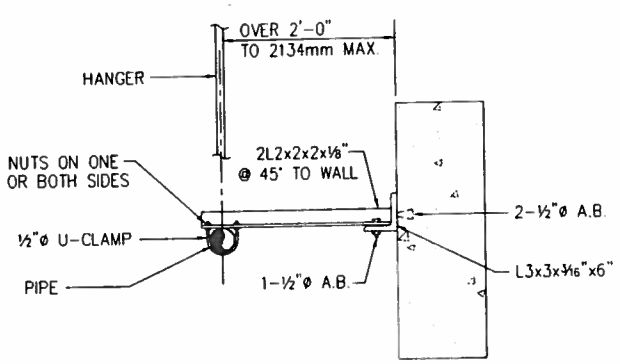

TYPE 2-ANGLE STRUT
NOT TO SCALE

LATERAL SUPPORT PERPENDIUCLAR TO HORIZ. PIPES TP ADJACENT WALL WHEN VERTICALLY SUPPORTED BY HANGERS-8'-0" MAX. SPACING. 5 TYP. M7-3

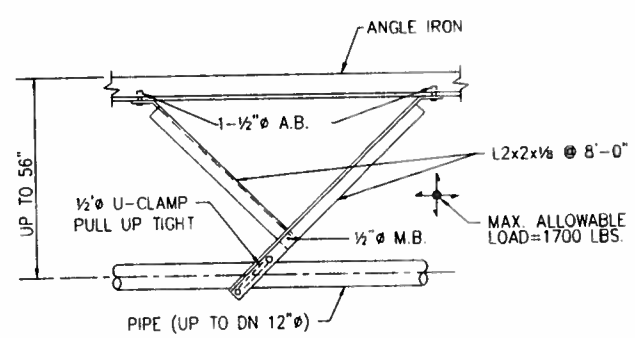

VERTICAL & HORIZONTAL SUPPORT PARALLEL TO HORIZONTAL PIPE 6 TYP. M7-3

SHERLOCK, SMITH & ADAMS, INC.
ARCHITECTS – ENGINEERS
MONTGOMERY, ALABAMA

U.S. NAVAL STATION ROOSEVELT ROADS, P.R.
REPAIRS TO NAVAL HOSPITAL
DETAILS

CONSTR. CONTR. NO. | SPECIFICATION NO. | NAVFAC DRWG. NO. | TF NO. | SHEET ? OF ??

SEAL AREA

ENG. DIV. DIR.: DATE: SATISFACTORY TO: DATE:
DESIGN BY: DUFFEE DRAWN BY: AUTERY

DATE	REVISION DESCRIPTION

NAVAL FACILITIES ENGINEERING COMMAND
DEPARTMENT OF THE NAVY
NAVY PUBLIC WORKS CENTER, JACKSONVILLE, FL
U.S. NAVAL STATION ROOSEVELT ROADS, P.R.
REPAIRS TO NAVAL HOSPITAL
DETAILS

PLATE NO
M7-3

PWC #

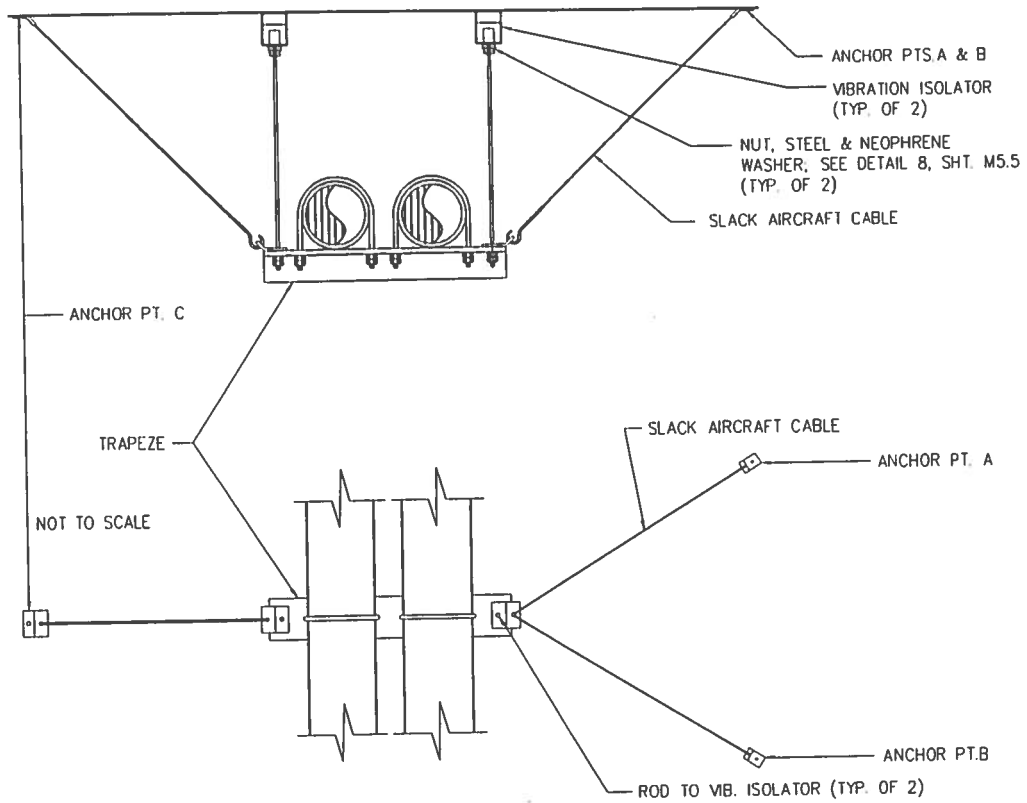

NOTES:
ISOLATORS MUST BE MODIFIED WITH UPWARD LIMIT TRAVEL STOP.

RADIATION MOUNTING (1 / TYP. M7-4)
NOT TO SCALE

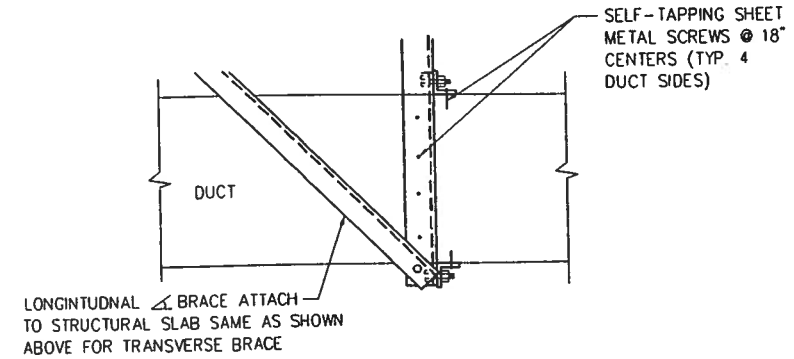

SECTION "A-A"

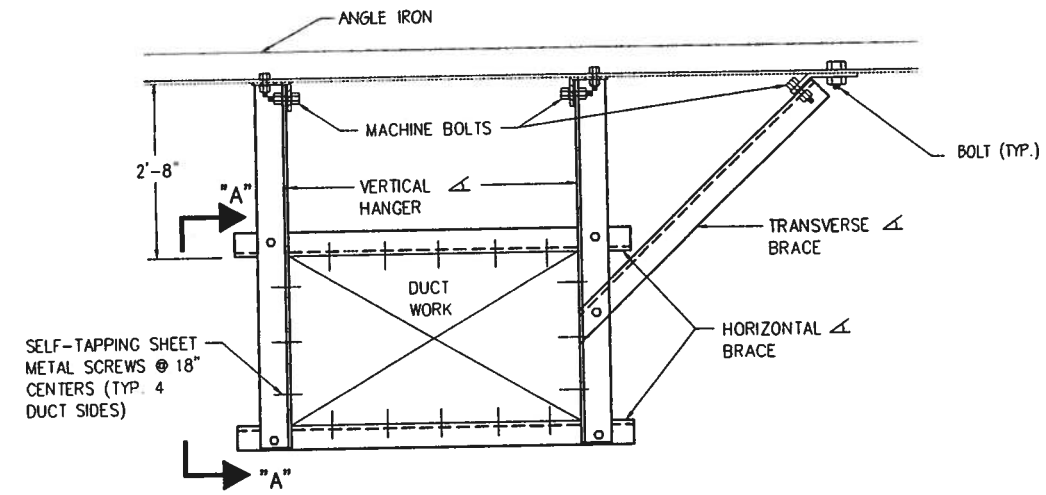

LATERAL RESTRAINT FOR DUCTWORK (2 / TYP. M7-4)
NOT TO SCALE

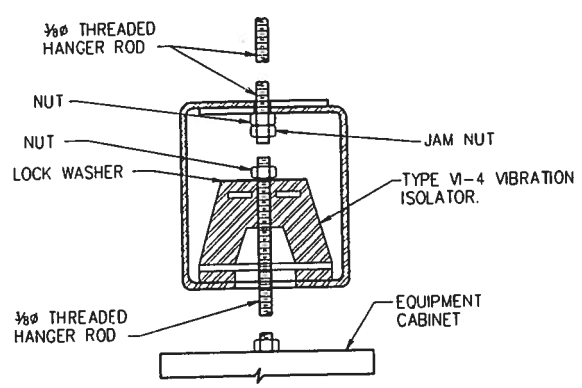

VIBRATION ISOLATOR (3 / TYP. M7-4)
NOT TO SCALE

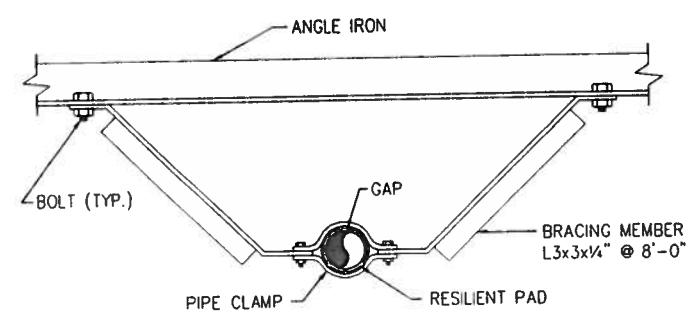

TRANSVERSE BRACING

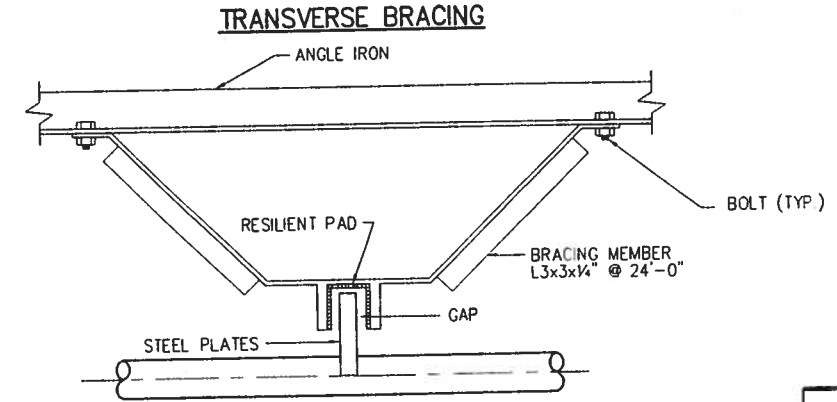

BRACING FOR VIBRATION ISOLATED PIPES (4 / TYP. M7-4)
NOT TO SCALE

SEAL AREA

REVISION DESCRIPTION	DATE	ENG. DIV. DIR.: DATE:	SATISFACTORY TO: DATE:	DESIGN BY: DUFFEE DRAWN BY: AUTERY PLAN BY: VANUR APPROVED:

NAVAL FACILITIES ENGINEERING COMMAND
DEPARTMENT OF THE NAVY
NAVY PUBLIC WORKS CENTER, JACKSONVILLE, FL
U.S. NAVAL STATION ROOSEVELT ROADS, P.R.
REPAIRS TO NAVAL HOSPITAL
DETAILS

SHERLOCK, SMITH & ADAMS, INC.
ARCHITECTS - ENGINEERS
MONTGOMERY, ALABAMA

U.S. NAVAL STATION ROOSEVELT ROADS, P.R.
REPAIRS TO NAVAL HOSPITAL
DETAILS

CONSTR. CONTR. NO.	SPECIFICATION NO.	NAVFAC DRWG. NO.	TF NO. SHEET ? OF ??

PLATE NO. M7-4

PWC #

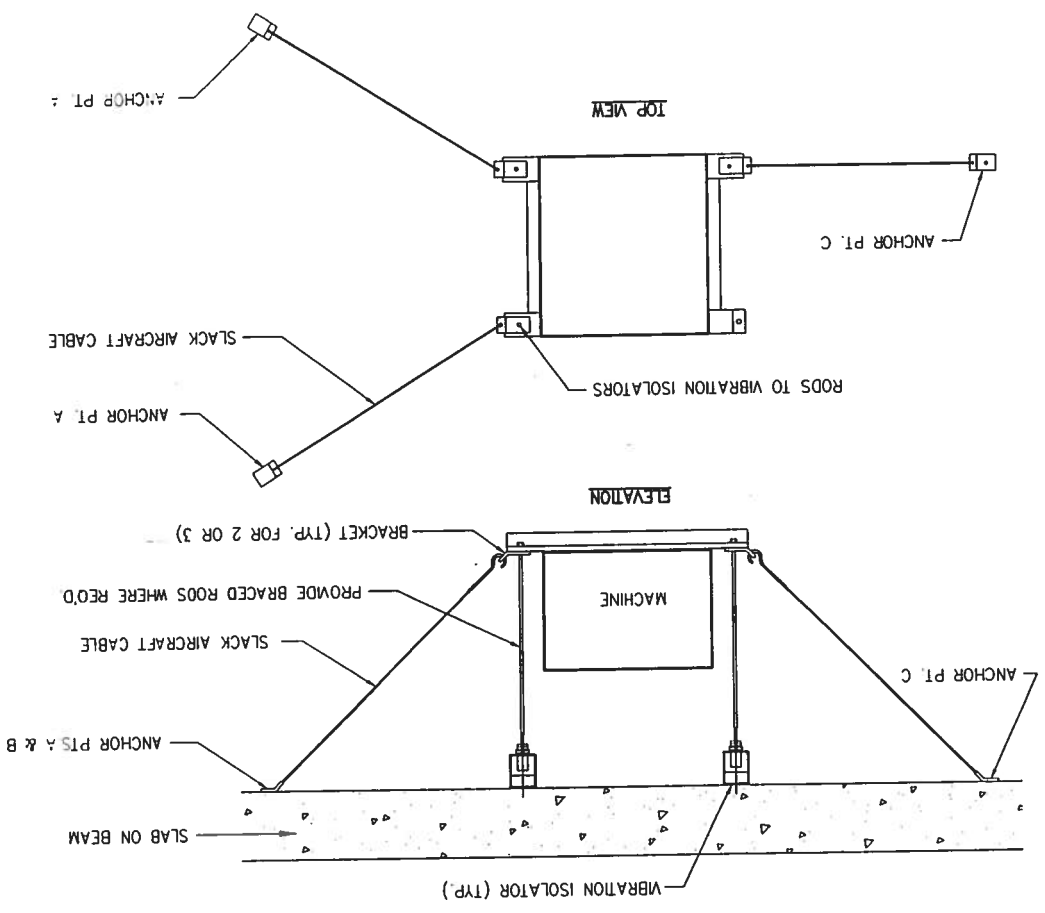

LATERAL RESTRAINT OF SUSPENDED EQUIPMENT (1) TYP. M7-5
NOT TO SCALE

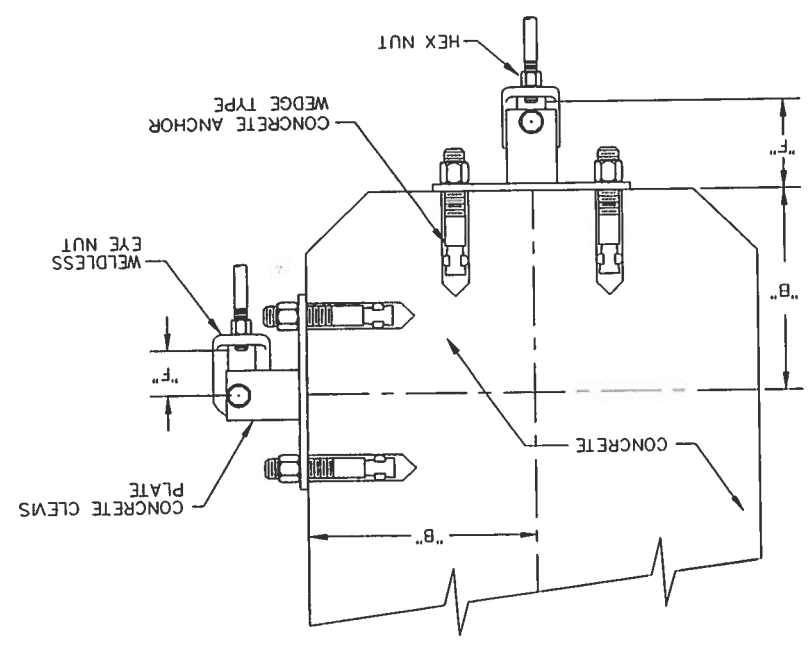

CONCRETE CLEVIS PLATE (2) TYP. M7-5
NOT TO SCALE

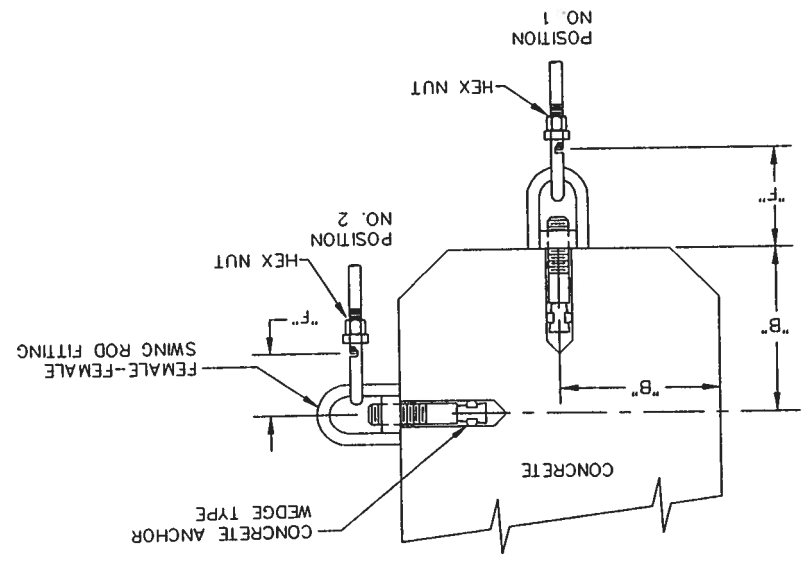

CONCRETE EXPANSION ANCHOR (3) TYP. M7-5
NOT TO SCALE

PWC #

CONSTRC. CONTR. NO.	SPECIFICATION NO.	NAVFAC DRWG. NO.	TP NO.
			SHEET 7 OF 77

SHERLOCK, SMITH & ADAMS, INC.
ARCHITECTS - ENGINEERS
MONTGOMERY, ALABAMA

U.S. NAVAL STATION
REPAIRS TO NAVAL HOSPITAL
ROOSEVELT ROADS, P.R.

DETAILS

PLAN NO. M7-5

DEPARTMENT OF THE NAVY
NAVY PUBLIC WORKS CENTER, JACKSONVILLE, FL
NAVAL FACILITIES ENGINEERING COMMAND

U.S. NAVAL STATION
REPAIRS TO NAVAL HOSPITAL
ROOSEVELT ROADS, P.R.

DETAILS

REVISION DESCRIPTION | DATE

ENG. OV. DR.: | DATE:
SATISFACTORY TO: | DATE:
DESIGN BY: DUFFEE | DRAWN BY: AUTERY

SEAL AREA

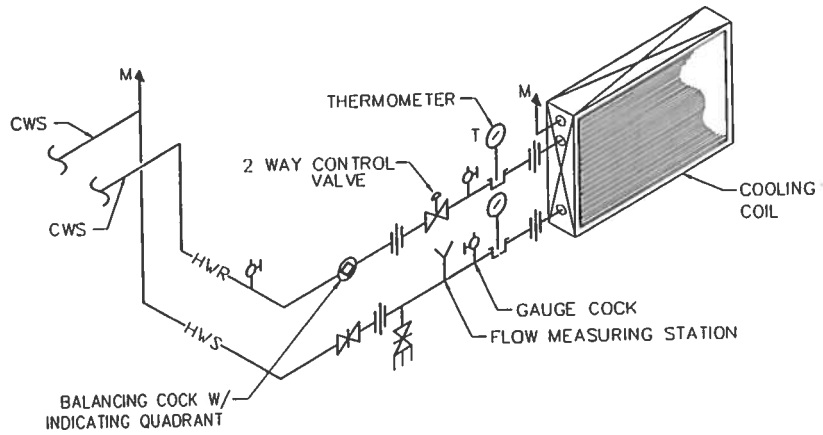

CHILLED WATER COIL PIPING (1 / TYP M7-6)

NOT TO SCALE

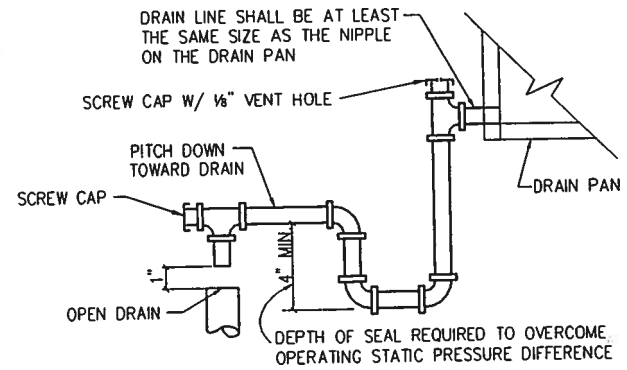

NOT TO SCALE

NOTE:
DRAIN LINE SHALL BE INSULATED

CONDENSATE DRAIN TRAP (3 / M4-1, M4-2 / M7-6)

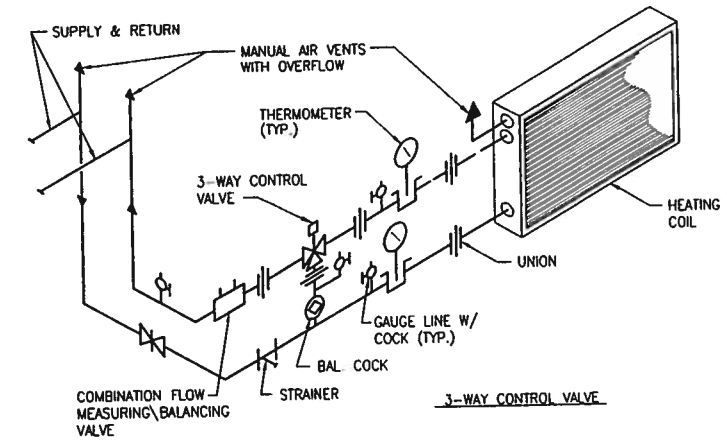

HOT WATER COIL PIPING (3 / TYP M7-6)

NOT TO SCALE

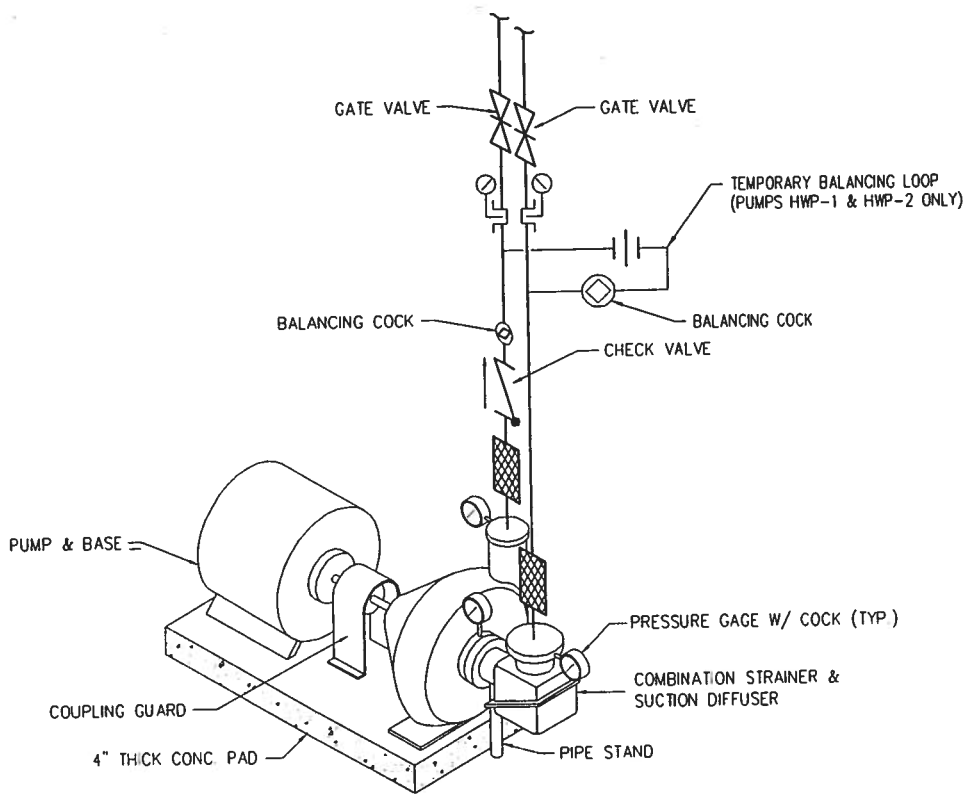

PUMP PIPING (4 / M3-2, M3-3, M6-2 / M7-6)

NOT TO SCALE

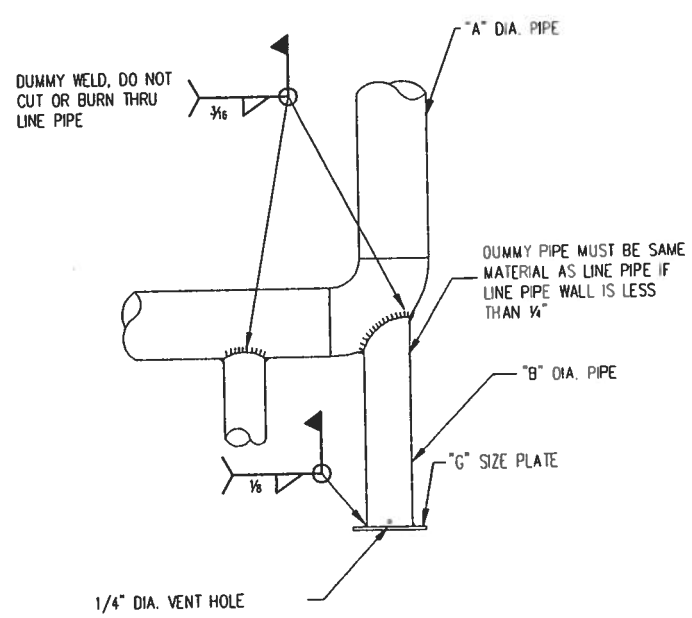

FIXED PIPE SUPPORT (5 / TYP. M7-6)

NOT TO SCALE

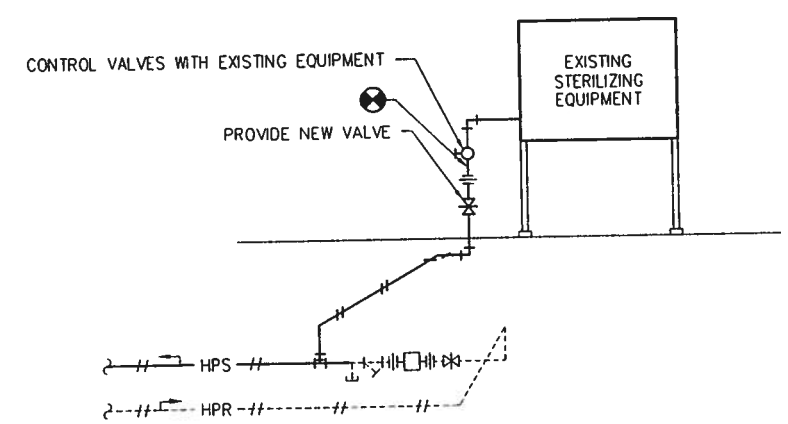

HIGH PRESSURE STEAM/CONDENSATE PIPING (4 / TYP. M7-6)

NOT TO SCALE

SEAL AREA

DESIGN BY: DUFFEE DRAWN BY: AUTERY

DWG. CK. DR.: DATE: SATISFACTORY TO: DATE:

REVISION DESCRIPTION | DATE

NAVAL FACILITIES ENGINEERING COMMAND
DEPARTMENT OF THE NAVY
NAVY PUBLIC WORKS CENTER, JACKSONVILLE, FL
U.S. NAVAL STATION ROOSEVELT ROADS, P.R.
REPAIRS TO NAVAL HOSPITAL
DETAILS

SHERLOCK, SMITH & ADAMS, INC.
ARCHITECTS - ENGINEERS
MONTGOMERY, ALABAMA

U.S. NAVAL STATION ROOSEVELT ROADS, P.R.
REPAIRS TO NAVAL HOSPITAL
DETAILS

CONSTR. CONTR. NO. | SPECIFICATION NO. | NAVFAC DRWG. NO. | TF NO | SHEET ? OF ??

PLATE NO. M7-6

PWC #

AIR HANDLING UNIT SCHEDULE

MARK	TYPE UNIT	AREA SERVED	SUPPLY FAN: TOTAL CFM	SUPPLY FAN: OUTSIDE AIR CFM	SUPPLY FAN: TOTAL STATIC PRESSURE (IN W.G.)	SUPPLY FAN: FAN TYPE	SUPPLY FAN: FAN H.P.	SUPPLY FAN: POWER V	SUPPLY FAN: POWER P	SUPPLY FAN: POWER C	COOLING COIL: COIL AIR CFM	COOLING COIL: MAX. COIL FACE VEL FPM	COOLING COIL: AIR SIDE PRESS. DRDP (IN W.G.)	COOLING COIL: COOLING CAPACITY TOTAL BTU/HR.	COOLING COIL: COOLING CAPACITY SENSIBLE BTU/HR.	COOLING COIL: ENT. AIR D.B. (°F)	COOLING COIL: ENT. AIR W.B. (°F)	COOLING COIL: CHILLED WATER ENT. WATER TEMP. °F	COOLING COIL: CHILLED WATER LVG. WATER TEMP. °F	COOLING COIL: CHILLED WATER CHILLED WATER G.P.M.	COOLING COIL: CHILLED WATER RUNOUT PIPE SIZE SUPPLY	COOLING COIL: CHILLED WATER RUNOUT PIPE SIZE RETURN	MAXIMUM FT. H_2O PRESS. DROP	REMARKS
AHU-1	①	ADMIN. EMERGENCY	26,200	4,945	5.00"	AF	25	460	3	60	26,200	550	1.00	1,179,000	772,600	77.8	66.2	45	55	235.8	5"	5"	14.0	PROVIDE 2-WAY CONTROL VALVE
AHU-2	③	OFFICES, PHARM & RADIOLOGY	17,700	4,520	5.00"	AF	20	460	3	60	17,700	550	1.00	849,069	522,300	81.1	69.0	45	55	169.8	4"	4"	15.0	PRDVIDE 2-WAY CONTRDL VALVE
AHU-4	③		18425	3,410	5.00"	AF	25	460	3	60	18425	550	1.00	805910	516,300	80.2	67.9	45	55	161.2	4"	4"	15.0	PROVIDE 2-WAY CONTROL VALVE
AHU-5	①	KITCHEN	5,110	5,110	5.00"	BI	7.5	460	3	60	5,110	550	0.90	443,344	199,500	90.0	79.0	45	55	88.7	3"	3"	15.0	PROVIDE 2-WAY CONTROL VALVE
AHU-6	②	PATIENT RMS., ADMIN., CLINIC	26,000	8,945	5.00"	AF	30	460	2,3	60	26,000	550	0.95	1,394,640	817,400	80.2	68.8	45	55	279	5"	5"	15.0	PROVIDE 2-WAY CONTROL VALVE

① HORIZONTAL, CENTRAL STATION AHU, W/ CHILLED WATER COOLING COIL CONSTANT VOLUME
② HORIZONTAL, CENTRAL STATION AHU, W/ CHILLEO WATER COOLING COIL, VARIABLE VOLUME
③ VERTICAL, CENTRAL STATION AHU, W/ CHILLED WATER COOLING COIL, VARIABLE VOLUME

FAN SCHEDULE

UNIT NO.	LOCATION	TOTAL AIR C.F.M.	INTERLOCK WITH	TYPE: FAN	TYPE: WHEEL	RPM	TOTAL EXT. S.P. IN. W.C.	DESIGN MOTOR H.P.	MAX. FAN S.P.L 3rd O.B.	POWER: VOLT	POWER: PH	POWER: CYC	DRIVE	REMARKS

FAN TYPES:
1. CENTRIFUGAL ROOF MT'D, MOTORIZED DAMPER, PREFABRICATED CURB.
2 CABINET FAN

DESIGN CONDITIONS

LOCATION	-	SUMMER	WINTER
AREAS TO BE HEATED & COOLED	OUTSIDE	90°FDB/81°FWB	68°FDB/57°FWB
	INSIDE	75°F ,50% R.H., MAX.	68°F.
AREAS TO BE HEATED ONLY	OUTSIDE	-	68°FDB/57°FWB
	INSIDE	-	55°F

SHERLOCK, SMITH & ADAMS, INC.
ARCHITECTS – ENGINEERS
MONTGOMERY, ALABAMA

U.S. NAVAL STATION ROOSEVELT ROADS, P.R.
REPAIRS TO NAVAL HOSPITAL
SCHEDULES

CONSTR. CONTR. NO. | SPECIFICATION NO | NAVFAC DRWG. NO. | TF NO | SHEET ? OF ??

SEAL AREA

DESIGN BY: DUFFEE DRAWN BY: AUTERY

DSG. DV. DR.: DATE: SATISFACTORY TO: DATE:

REVISION DESCRIPTION | DATE

DEPARTMENT OF THE NAVY
NAVAL FACILITIES ENGINEERING COMMAND
NAVY PUBLIC WORKS CENTER, JACKSONVILLE, FL
U.S. NAVAL STATION ROOSEVELT ROADS, P.R.
REPAIRS TO NAVAL HOSPITAL
SCHEDULES

PLATE NO
M8-1

PWC #

AIR TERMINAL UNITS – V.A.V.–R.H. & C.V.–R.H.

MARK	TYPE	DESIGN C.F.M.	MIN. C.F.M. SET PT.	CAPACITY BTU/HR	AIR TEMP. °F		WATER TEMP. °F		G.P.M.	RUNOUT SIZE INCHES	T'STAT LOCATION	REHEAT COIL TYPE	APPROX. BOX SIZE	* MAXIMUM ALLOW. DB 3RD O.B.	MAXIMUM S.P. DROP	MAXIMUM WATER P.D. FT. H_2O	REMARKS
					ENT.	LVG.	ENT.	LVG.									

BOX TYPES:
1. VARIABLE AIR VOLUME W/HEATING COIL.
2. CONSTANT AIR VOLUME W/HEATING COIL.
3. CONSTANT AIR VOLUME – 2 POSITION, W/HEATING COIL FOR REVERSIBLE PRESSURE CHANGE-OVER.
4. CONSTANT AIR VOLUME REGULATOR, EXHAUST SYSTEM.

* OB .5" MININUM P*

SEAL AREA

ENG. DIV. DIR.: DATE:
SATISFACTORY TO: DATE
DESIGN BY: DUFFEE DRAWN BY: AUTERY

DATE	REVISION DESCRIPTION

NAVAL FACILITIES ENGINEERING COMMAND
DEPARTMENT OF THE NAVY
NAVY PUBLIC WORKS CENTER, JACKSONVILLE, FL
U.S. NAVAL STATION ROOSEVELT ROADS, P.R.
REPAIRS TO NAVAL HOSPITAL
SCHEDULES

SHERLOCK, SMITH & ADAMS, INC.
ARCHITECTS – ENGINEERS
MONTGOMERY, ALABAMA

U.S. NAVAL STATION ROOSEVELT ROADS, P.R.
REPAIRS TO NAVAL HOSPITAL
SCHEDULES

CONSTR. CONTR. NO. | SPECIFICATION NO. | NAVFAC DRWG. NO. | TF NO | SHEET ? OF ??

PLATE NO.
M8-2

PWC #

RETURN AND EXHAUST GRILLE SCHEDULE

R = RETURN AIR GRILLE
E = EXHAUST AIR GRILLE

MAX. CFM	SIZE ✳✳✳	EQUIVALENT SIZES ✳	
60	6 x 6		
90	6 x 6	8 x 4	
130	8 x 6	12 x 4	
170	10 x 6		
190	8 x 8	12 x 6	
230	10 x 8	14 x 6	
300	10 x 10	12 x 8	18 x 6
340	12 x 10	20 x 6	
400	14 x 10	16 x 8	
450	12 x 12	16 x 10	18 x 8
530	14 x 12	18 x 10	
590	14 x 14	24 x 8	
670	16 x 14	18 x 12	
800	16 x 16	24 x 10	
900	18 x 16	24 x 12	
1040	18 x 18	24 x 14	30 x 12
1220	20 x 18	26 x 14	
1390	22 x 20	26 x 16	30 x 14
1550	24 x 20	30 x 16	36 x 14
✳✳			

NOTES:
✳ SELECT EQUIVALENT SIZES ONLY IF REQUIRED BY DUCTWORK LIMITATIONS.

✳✳ LARGER CAPACITIES SHALL USE MULTIPLE GRILLES.

✳✳✳ CONTRACTOR MAY SUBSTITUTE ROUND NECK OF EQUIVILENT SIZES

- MAX STATIC PRESSURE DROP FOR RETURN & EXHAUST GRILLES & REGISTERS SHALL BE .10 IN W.C

DUCT CONSTRUCTION & LEAK TEST SCHEDULE

SYSTEM	DUCT PRESSURE CLASS: SUPPLY DUCT FROM AHU TO TERMINAL UNIT	SUPPLY DUCT FROM TERMINAL UNIT TO FINAL FILTER	SUPPLY DUCT FROM FINAL FILTER TO ROOM INLET	SUPPLY DUCT FROM TERMINAL UNIT TO ROOM INLET	RETURN DUCT	EXHAUST AIR DUCT	OUTSIDE AIR DUCT	DUCT SEAL CLASS	DUCT TEST PRESSURE	DUCT LEAK CLASS: RECTANGULAR	ROUND	REMARKS
AHU-	6	2	1	1	2 N	½ N	½ N	A	8"	6	3	①
AHU-	6	2	1	1	2 N	½ N	½ N	A	8"	6	3	①

NOTES: 1 - ONLY THE SUPPLY DUCT FROM THE SUPPLY FAN DISCHARGE TO THE TERMINAL UNIT INLET WILL BE DUCT LEAK TESTED

FILTER SCHEDULE

FILTER UNIT NO.	EQUIPMENT OR ROOM SERVED	LOCATION X	C.F.M.	MINIMUM EFFICIENCY X X	FILTER MAX. FACE VELOCITY	FILTER MAX. P.D. IN. W.C. CLEAN	CARTRIDGE: SIZE HxWxD	CARTRIDGE: NUMBER	FILTER BANKING ARRANGEMENT	RECOMMENDED FILTER CHANGE OUT P.D. IN. H_2O	REMARKS

✳ ABOVE CEILINGS OR IN MECHANICAL PENTHOUSES
✳✳ FILTER EFFICIENCY BASED ON ASHRAE 52-76 TEST STANDARD

NOTES:
① NO. OF FILTERS OF SIZE & QUANTITY TO MOUNT IN FILTER/MIXING BOX OF AHU TO BE FURNISHED
② BOTTTOM ACCESS FILTER & HOUSING

PUMP SCHEDULE

MARK	SERVICE	MAX. R.P.M.	G.P.M.	MIN. HEAD FT. H_2O	MIN. MOTOR SIZE H.P.	POWER: VOLTS	PH.	CY.	TYPE	PIPING CIRCUIT SERVED	LOCATION	REMARKS

SUPPLY AIR DIFFUSER SCHEDULE

CFM	DESCRIPTION	SIZE ✳	THROW	MIN. INLET SIZE	REMARKS
100	SQ CLG DIFF	6 x 6	4-WAY	6"ø	
225	SQ CLG DIFF	9 x 9	4-WAY	8"ø	
400	SQ CLG DIFF	12 x 12	4-WAY	10"ø	
630	SQ CLG DIFF	15 x 15	4-WAY	12"ø	

✳ DIFFUSERS SHALL BE 4-WAY THROW UNLESS OTHERWISE SHOWN ON THE PLANS. DIFFUSERS MOUNTED IN ACOUSTICAL TILE CEILINGS SHALL BE DESIGNED TO FIT INTO A 24x24 "T" BAR SYSTEM. SEE REFLECTED CLG. PLANS FOR LOCATIONS AND CEILING TYPE

- MAX STATIC PRESSURE DROP FOR SUPPLY AIR DIFFUSERS SHALL BE .10 IN W.C.

SHERLOCK, SMITH & ADAMS, INC.
ARCHITECTS - ENGINEERS
MONTGOMERY, ALABAMA

U.S. NAVAL STATION ROOSEVELT ROADS, P.R.
REPAIRS TO NAVAL HOSPITAL
SCHEDULES

CONSTR. CONTR. NO | SPECIFICATION NO. | NAVFAC DRWG. NO. | TF NO. | SHEET ? OF ??

DEPARTMENT OF THE NAVY
NAVY PUBLIC WORKS CENTER, JACKSONVILLE, FL
NAVAL FACILITIES ENGINEERING COMMAND

U.S. NAVAL STATION ROOSEVELT ROADS, P.R.
REPAIRS TO NAVAL HOSPITAL
SCHEDULES

REVISION DESCRIPTION | DATE

ENG. DIV. DIR.: | DATE: | SATISFACTORY TO: | DATE:

DESIGN BY: DUFFEE | DRAWN BY: AUTERY
CHK BY: YOUNG | APPROVED:

PLATE NO.
M8-3

PWC #

AIR HANDLING UNIT (TYPICAL)

POINT MUNBER	POINT DESCRIPTION	TYPE	DAMPER POSITION	ON-OFF	CONTROL VALVE	SMOKE DETECTION	AIR TEMPERATURE	HUMIDITY	DIFF. PRESSURE	HIGH PRESSURE	FIRE ALARM	PWR USEAGE	AIR FLOW	STATUS
1	OUTSIDE AIR DAMPERS	AO	●											
2	FILTER STATUS (DIFFERENTIAL PRESSURE)	AI							●	●				
3	AVERAGE MIXED AIR TEMPERATURE	AI					●							
4	COOLING COIL VALVE	AO			●									
5	VFD SPEED	AO												
6	VFD START/STOP	BO		●								●		
7	SUPPLY DUCT SMOKE INDICATION	BI				●					●			
8	AVERAGE SUPPLY AIR TEMPERATURE	AI					●							
9	FAN STATUS	BI		●										
10	VFD STATUS	AI										●		●
11	RETURN AIR TEMPERATURE	AI					●							
12	RETURN AIR HUMIDITY	AI						●						
13	RETURN DUCT SMOKE INDICATION	BI				●					●			
14	RETURN AIR DAMPER	AO	●											
15	AIR FLOW MEASURING STATION	AI												●

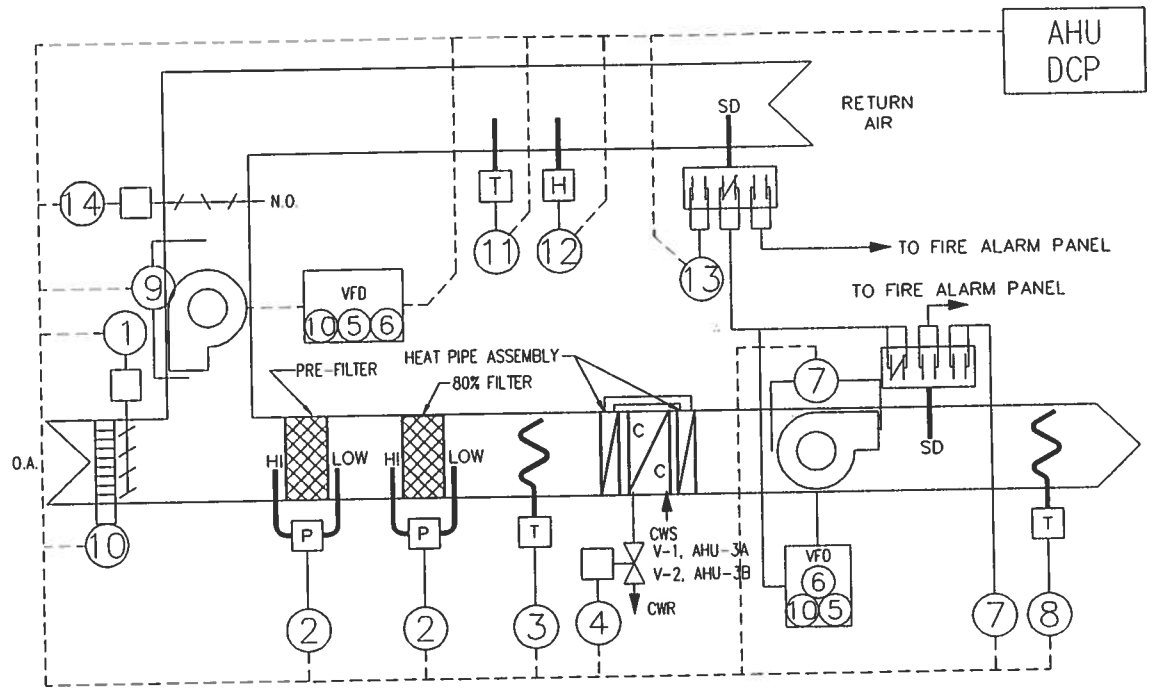

AIR HANDLER CONTROL DIAGRAM

CONTROL LEGEND

DCP	DIGITAL CONTROL PANEL
DDC	DIRECT DIGITAL CONTROL
VAV	VARIABLE AIR VOLUME
CV	CONSTANT AIR VOLUME
CVTR	CONSTANT VOLUME TERMINAL REHEAT
SD	SMOKE DETECTOR
O.A.	OUTDOOR AIR
OAD	OUTSIDE AIR DAMPER
R.A.	RETURN AIR
RAD	RETURN AIR DAMPER
N.O	NORMALLY OPEN
N.C.	NORMALLY CLOSED
C	COMMON
CWS	CHILLER WATER SUPPLY
CWR	CHILLED WATER RETURN
HWS	HOT WATER SUPPLY
HWR	HOT WATER RETURN
T	TEMPERATURE SENSOR
H	HUMIDITY SENSOR
BI	BINARY INPUT
BO	BINARY OUTPUT
AI	ANALOG INPUT
AO	ANALOG OUTPUT
P	DIFFERENTIAL PRESSURE SENSOR
VFD	VARIABLE FREQUENCY DRIVE

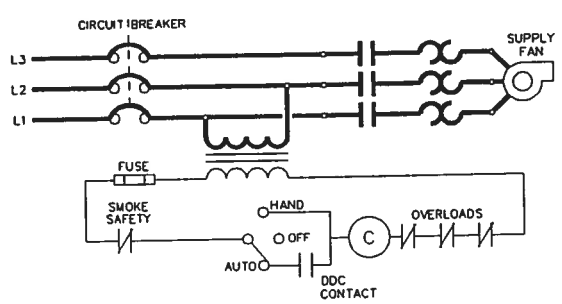

AIR HANDLING UNIT FAN MOTOR WIRING DIAGRAM

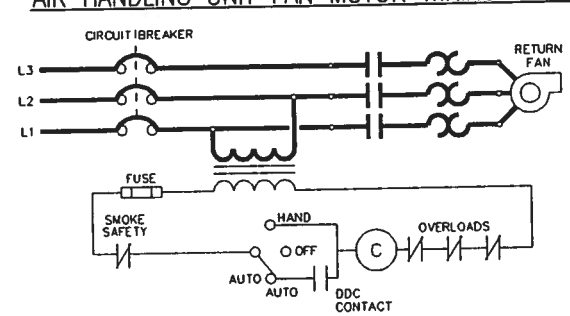

RETURN AIR FAN MOTOR WIRING DIAGRAM

SEQUENCE OF CONTROL:

GENERAL:

(A) WHEN PLACED IN OPERATION THE CONTROL SYSTEMS SHALL BE ENERGIZED THRU HAND-OFF-AUTO SWITCHES (WHEN IN AUTO POSITION). DAMPERS SHALL OPEN TO THEIR RESPECTIVE POSITIONS AND AFTER A VARIABLE TIME DELAY THE AIR HANDLING UNIT FAN/S AND THEIR INTERLOCKED FANS SHALL START. THE SYSTEM MAY ALSO BE ENERGIZED FROM THE TERMINAL UNIT THERMOSTATS (SEE TERMINAL UNIT CONTROL).

(B) WHENEVER AIR HANDLING UNIT/S ARE STOPPED CONTROL SYSTEM SHALL BE DE-ENERGIZED AND DAMPERS SHALL CLOSE. AIR HANDLING UNIT/S AND INTERLOCKED FANS SHALL STOP.

(C) ANY DUCT SMOKE DETECTOR SENSING SMOKE SHALL SIGNAL THE FIRE ALARM CONTROL PANEL, AND ALSO SEND A SIGNAL TO THE RESPECTIVE AIR HANDLING UNIT. WHEN SIGNAL IS RECEIVED BY THE AIR HANDLING UNIT, THE UNIT SHALL STOP AND INTERLOCKED FANS SHALL STOP UNLESS OTHERWISE INDICATED. THE SYSTEM MAY ONLY BE RESTARTED BY THE FIRE DEPARTMENT OR OTHER QUALIFIED PERSONNEL FROM THE FIRE ALARM CONTROL PANEL. WHEN AN ALL CLEAR SIGNAL IS RECEIVED ALL DETECTORS, ETC. SHALL BE AUTOMATICALLY RESET AND DAMPERS SHALL OPEN TO THEIR RESPECTIVE POSITIONS. AFTER A VARIABLE TIME DELAY AIR HANDLING UNIT FAN/S AND INTERLOCKED FANS SHALL START. COORDINATE THE WORK FURNISHED AND INSTALLED UNDER THE ELECTRICAL SECTION OF THE SPECIFICATIONS WITH WORK FURNISHED AND INSTALLED UNDER THE MECHANICAL SECTION OF THE SPECIFICATIONS.

(D) ALL CONTROL VALVES SHALL BE TWO (2) WAY UNLESS OTHERWISE INDICATED.

AHU-1

WHEN THE SYSTEM IS IN OPERATION AS HERE-IN-BEFORE INDICATED THE FOLLOWING SEQUENCE SHALL OCCUR. THE AIR HANDLING UNIT SHALL OPERATE CONTINUOUSLY SUBJECT TO THE HAND-OFF-AUTO SWITCHES. THE AIR HANDLING UNIT FAN SHALL OPERATE THROUGH FIRE ALARM SYSTEM CONTACTS. THE CHILLED WATER CONTROL VALVE V-1 SHALL BE MODULATED BY A DISCHARGE AIR SENSOR/CONTROLLER TO MAINTAIN THE SET POINT. A RETURN AIR HUMIDITY SENSOR SET AT 50% R.H. (ADJUSTABLE) SHALL OVERRIDE THE DISCHARGE AIR TEMPERATURE SENSOR AND SHALL MODULATE THE CHILLED WATER CONTROL VALVE V-1 TO MAINTAIN SET POINT HUMIDITY. DIFFERENTIAL PRESSURE SENSORS SHALL MONITOR THE PRESSURE DROP ACROSS ALL FILTERS WHEN PRESSURE DROP RISES ABOVE SET POINT (1.0 IN. W.G. ADJUSTABLE. FOR 80% & 90% FILTERS & .50 IN. W.G ADJUSTABLE. FOR 25% FILTERS) ALARM SHALL OCCUR AND RED PILOT LIGHT LABELED "FILTER No __ DIRTY, ROOM __" SHALL BE ENERGIZED. PILOT LIGHTS SHALL BE LOCATED NEXT TO AHU DCP. EACH FILTER SHALL HAVE ITS OWN PILOT LIGHT AND IDENTIFYING MARK ON LABEL.

AHU-2, 4, 5 & 6

AHU-2, 3, 4, 5 & 6 ARE SIMILAR EXCEPT CHILLED WATER CONTROL VALVE SHALL BE V-2, V-4, V-5, & V-6.

TERMINAL UNIT CONTROL:

GENERAL

THE TERMINAL UNIT CONTROLS SHALL BE FACTORY INSTALLED AND SHALL BE COMPATIBLE WITH THE DDC SYSTEM FURNISHED. ALL TERMINAL UNITS SERVED BY ONE AIR HANDLING UNIT SHALL BE CONNECTED BACK TO THE AIR HANDLING UNIT DCP. THE UNIT SHALL BE CAPABLE OF MAINTAINING THE AIR FLOWS AS INDICATED ON THE TERMINAL UNIT SCHEDULE. ALL TERMINAL UNITS SHALL BE INTERFACED WITH THE DDC CONTROL SYSTEM CENTRAL PROCESSOR SO THAT SPACE TEMPERATURES MAY BE READ AND RESET FROM THE CENTRAL UNIT PROCESSOR. EACH TERMINAL UNIT THERMOSTAT SHALL HAVE THE CAPABILITY TO START THE ENTIRE DDC CONTROL SYSTEM.

CAV (CONSTANT AIR VOLUME) W/ REHEAT

A SPACE TEMPERATURE SENSOR SHALL MODULATE THE REHEAT COIL CONTROL VALVE FROM THE MAXIMUM TO THE MINIMUM HOT WATER FLOW TO MAINTAIN SET POINT.

EXHAUST FANS

EXHAUST FANS SHALL BE INTERLOCKED TO OPERATE ONLY WHEN THE AIR HANDLING SYSTEM IT SERVES IS OPERATING. ANY INTERLOCKED DAMPERS SHALL OPEN WHEN FAN STARTS AND CLOSE WHEN FAN STOPS.

SHERLOCK, SMITH & ADAMS, INC.
ARCHITECTS - ENGINEERS
MONTGOMERY, ALABAMA

U.S. NAVAL STATION ROOSEVELT ROADS, P.R.
REPAIRS TO NAVAL HOSPITAL
CONTROLS

CONSTR. CONTR. NO. | SPECIFICATION NO. | NAVFAC DRWG. NO. | TF NO. | SHEET ? OF ??

SEAL AREA

ENG. DIV. DIR.: DATE:
SATISFACTORY TO: DATE:
DESIGN BY: B.H. DRAWN BY: JOINER
CHK. BY: YOUNG APPROVED:

DATE	REVISION DESCRIPTION

DEPARTMENT OF THE NAVY
NAVAL FACILITIES ENGINEERING COMMAND
NAVY PUBLIC WORKS CENTER, JACKSONVILLE, FL
U.S. NAVAL STATION ROOSEVELT ROADS, P.R.
REPAIRS TO NAVAL HOSPITAL
CONTROLS

PLATE NO.
M9-1

PWC #

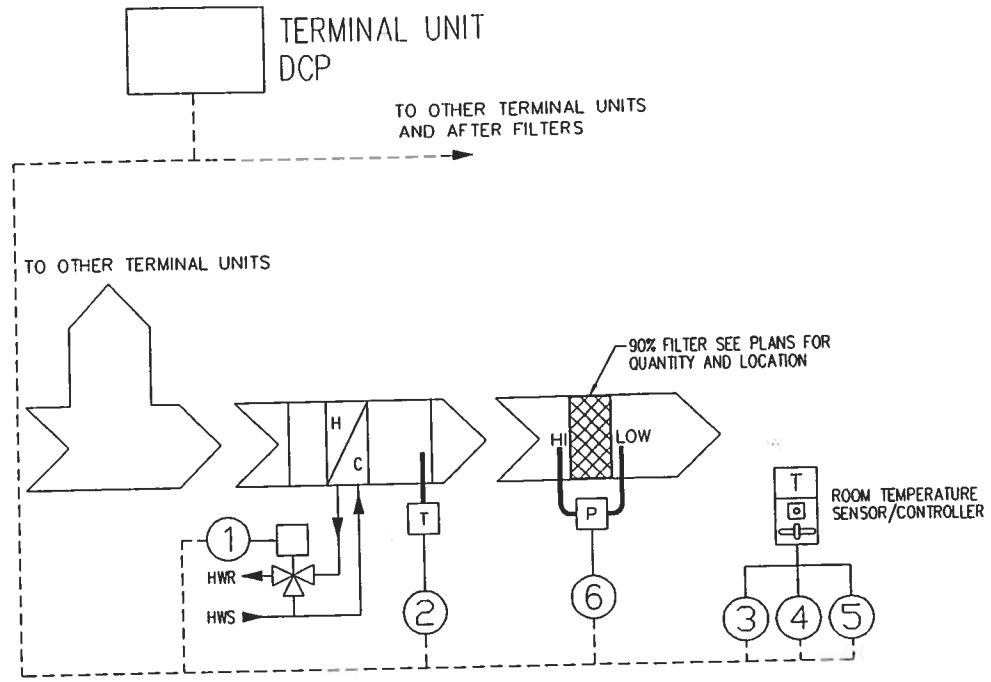

C.V. TERMINAL UNIT CONTROL DIAGRAM

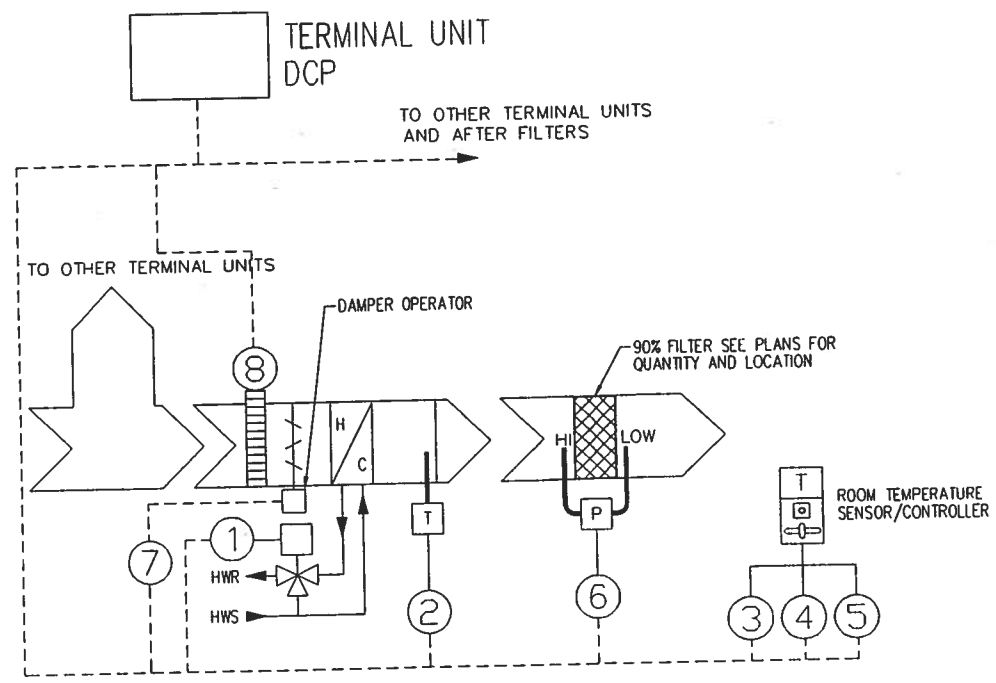

V.A.V. TERMINAL UNIT CONTROL DIAGRAM

TERMINAL UNIT (TYPICAL)

POINT NUMBER	POINT DESCRIPTION	TYPE	CONTROL VALVE	AIR TEMPERATURE	DIFF. PRESSURE	OVER-RIDE SWITCH	DAMPER OPERATOR	AIR FLOW					
1	HEATING COIL VALVE	AO	●										
2	SUPPLY AIR TEMPERATURE	AI		●									
3	ZONE AIR TEMPERATURE	AI		●									
4	PUSH BUTTON OCCUPANCY OVERRIDE	BO				●							
5	LOCAL ZONE TEMPERATURE SETPOINT ADJUSTMENT	AI		●									
6	FILTER STATUS (DIFFERENTIAL PRESSURE)	AI			●								
7	V.A.V. DAMPER	AO					●						
8	AIR FLOW MEASURING STATION	AO						●					

SEAL AREA

DWG. DN. DR.: DATE: SATISFACTORY TO: DATE: DESIGN BY: HALLIBURTON DRAWN BY: JOINER

REVISION DESCRIPTION | DATE

DEPARTMENT OF THE NAVY
NAVAL FACILITIES ENGINEERING COMMAND
NAVY PUBLIC WORKS CENTER, JACKSONVILLE, FL
U.S. NAVAL STATION ROOSEVELT ROADS, P.R.
REPAIRS TO NAVAL HOSPITAL
CONTROLS

SHERLOCK, SMITH & ADAMS, INC.
ARCHITECTS – ENGINEERS
MONTGOMERY, ALABAMA

U.S. NAVAL STATION ROOSEVELT ROADS, P.R.
REPAIRS TO NAVAL HOSPITAL
CONTROLS

CONSTR. CONTR. NO. | SPECIFICATION NO. | NAVFAC DRWG. NO. | TF NO. | SHEET ? OF ??

PLATE NO. M9-2

PWC #

SPRINKLER SYSTEM BASIS OF DESIGN

OCCUPANCY – LIGHT HAZARD
WET PIPE SPRINKLER SYSTEM
FULLY SPRINKLE THE FACILITY

AVAILABLE WATER SUPPLY AT BASE OF RISER (DOWN STREAM OF BACKFLOW PREVENTER)

STATIC PRESSURE = 68 PSI
FLOW RATE:
300 GPM – SPRINKLERS
250 GPM – OUTSIDE HOSE

RESIDUAL PRESSURE @ TOTAL OF 894 GPM = 48 PSI

PROVIDE "QUICK RESPONSE SPRINKLERS" FOR PATIENT ROOMS.

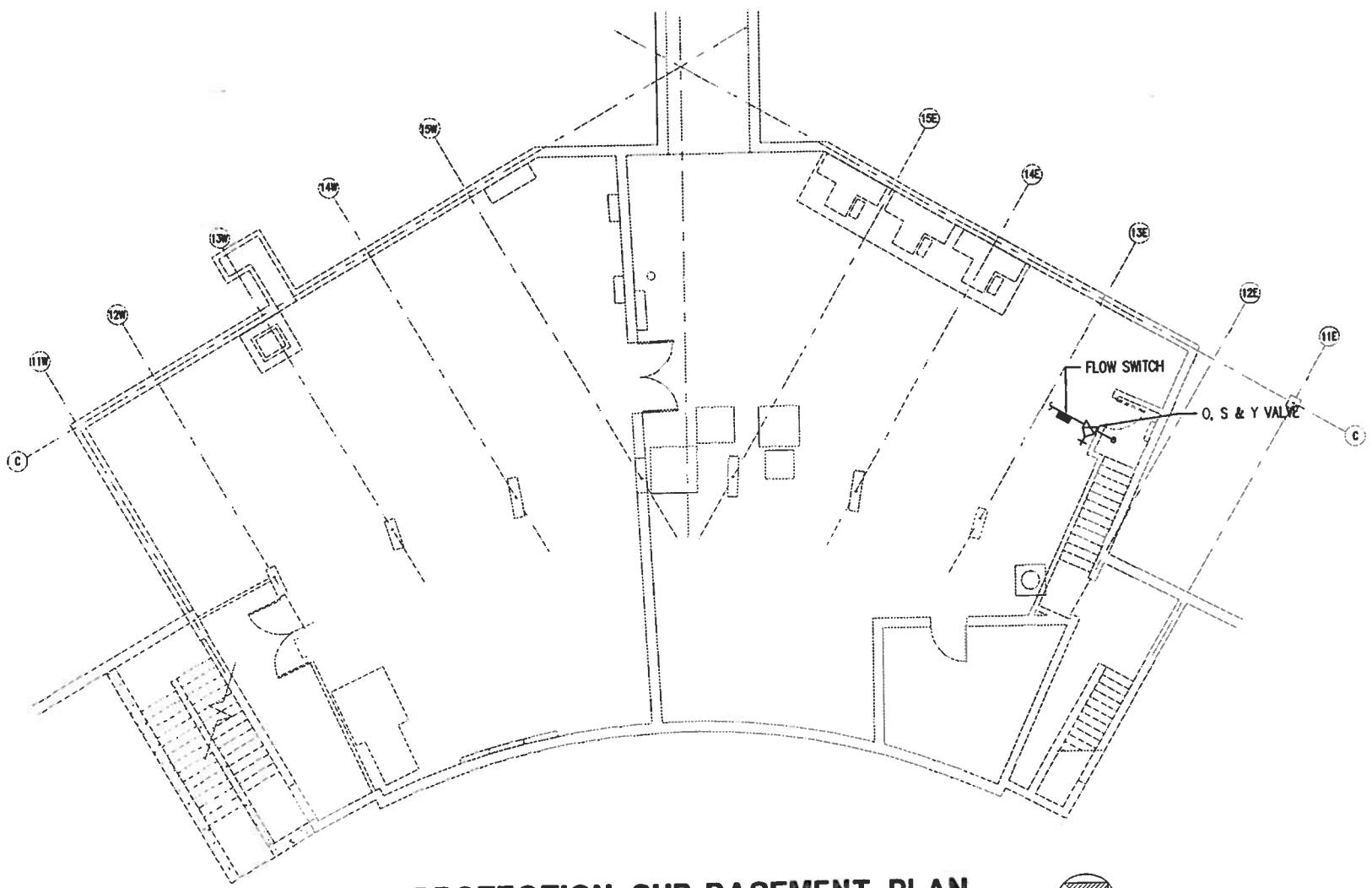

FIRE PROTECTION SUB-BASEMENT PLAN

SCALE: 1/8" = 1'-0"

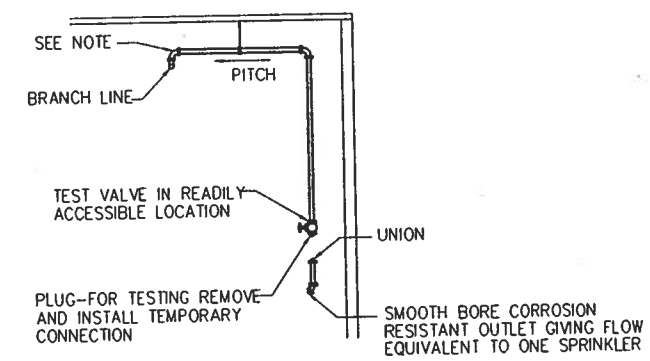

INSPECTORS TEST DETAIL

NOT TO SCALE

NOTE: TO MINIMIZE CONDENSATION OF WATER IN THE DROP TO THE TEST CONNECTION, PROVIDE A NIPPLE–UP OFF OF THE BRANCH LINE.

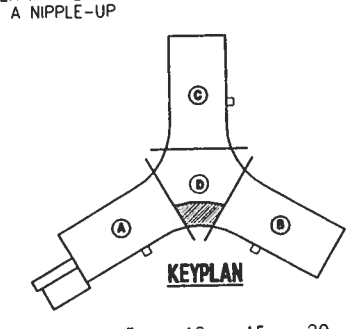

KEYPLAN

0 5 10 15 20
GRAPHIC SCALE
1/8"=1'-0"

P:\95-113\MC\113M0302.dwg, (48|96), 02/28/96 at 11:33:47 by WINGARD_M

SHERLOCK, SMITH & ADAMS, INC.
ARCHITECTS – ENGINEERS
MONTGOMERY, ALABAMA

U.S. NAVAL STATION ROOSEVELT ROADS, P.R.
REPAIRS TO NAVAL HOSPITAL
FIRE PROTECTION SUB–BASEMENT PLAN

CONSTR CONTR NO | SPECIFICATION NO. | NAVFAC DRWG NO. | IF NO | SHEET ? OF ??

ENG. DIV. DIR.: DATE:
SATISFACTORY TO: DATE:
DESIGN BY: WINGARD DRAWN BY: AUTERY
CHK BY: YOUNG APPROVED

REVISION DESCRIPTION | DATE

DEPARTMENT OF THE NAVY
NAVAL FACILITIES ENGINEERING COMMAND
NAVY PUBLIC WORKS CENTER, JACKSONVILLE, FL
U.S. NAVAL STATION ROOSEVELT ROADS, P.R.
REPAIRS TO NAVAL HOSPITAL
FIRE PROTECTION SUB–BASEMENT PLAN

PWC DWG NO | NAVFAC DWG. NO. | CONSTR CONTR NO.

PLATE NO
FP1-1

PWC #

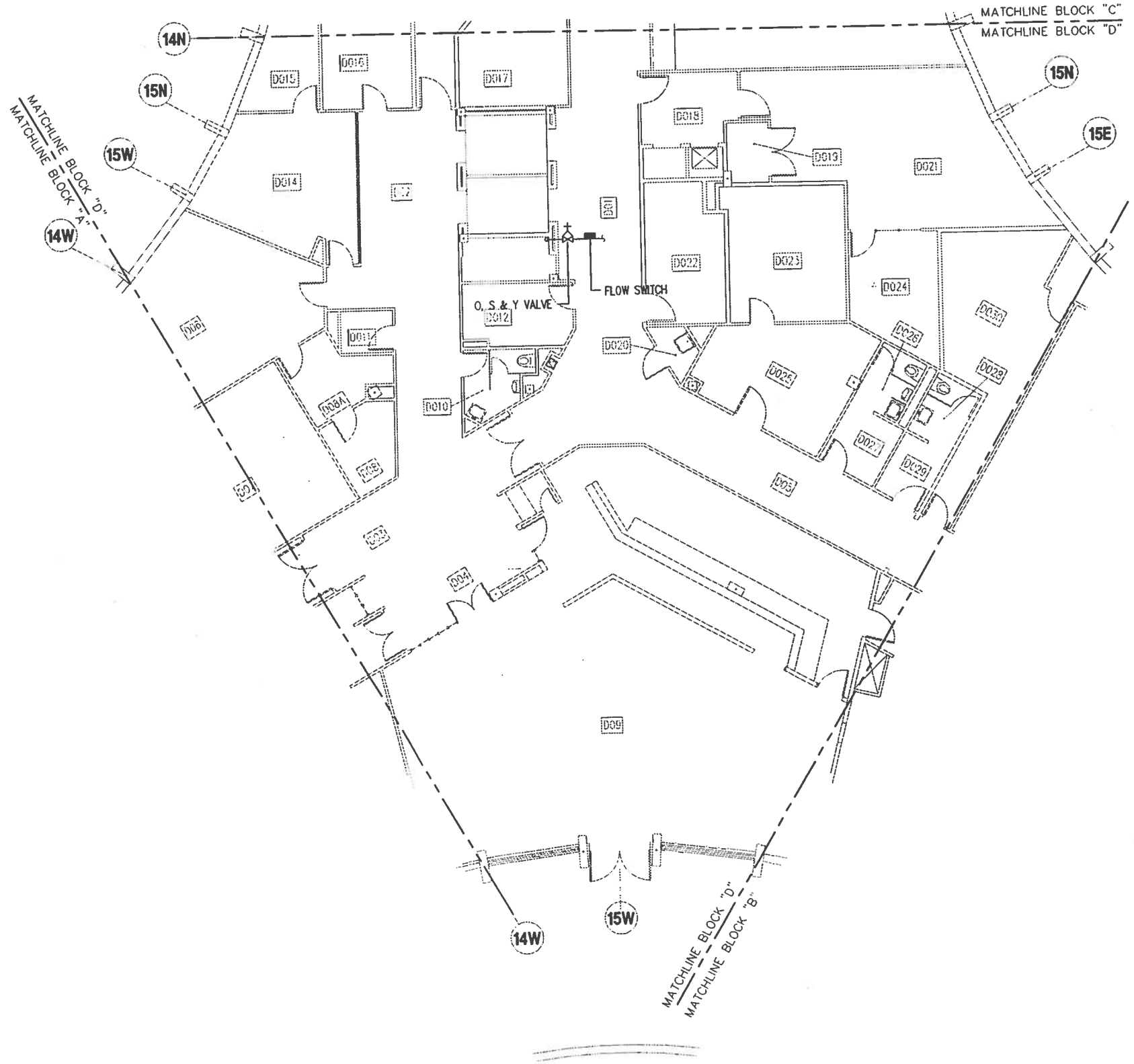

FIRE PROTECTION BASEMENT PLAN BLOCK "D"

SCALE: 1/16" = 1'-0"

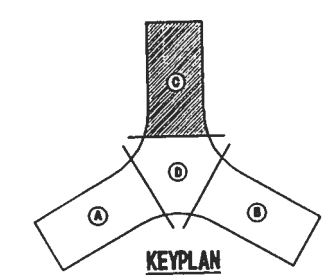

KEYPLAN

0 5 10 15 20

GRAPHIC SCALE
1/8"=1'-0"

SHERLOCK, SMITH & ADAMS, INC.
ARCHITECTS – ENGINEERS
MONTGOMERY, ALABAMA

U.S. NAVAL STATION ROOSEVELT ROADS, P.R.
REPAIRS TO NAVAL HOSPITAL
FIRE PROTECTION BASEMENT PLAN BLOCK "C"

CONSTR. CONTR. NO. | SPECIFICATION NO. | NAVFAC DRWG. NO. | TF NO | SHEET ? OF ??

PLATE NO
FP1-2

PWC #

ENG. OV. DR: DATE:
SATISFACTORY TO: DATE:
DESIGN BY: WINGARD DRAWN BY: AUTERY
CHK BY: YOUNG APPROVED:

REVISION DESCRIPTION	DATE

DEPARTMENT OF THE NAVY
NAVAL FACILITIES ENGINEERING COMMAND
NAVY PUBLIC WORKS CENTER, JACKSONVILLE, FL
U.S. NAVAL STATION ROOSEVELT ROADS, P.R.
REPAIRS TO NAVAL HOSPITAL
FIRE PROTECTION BASEMENT PLAN BLOCK "C"

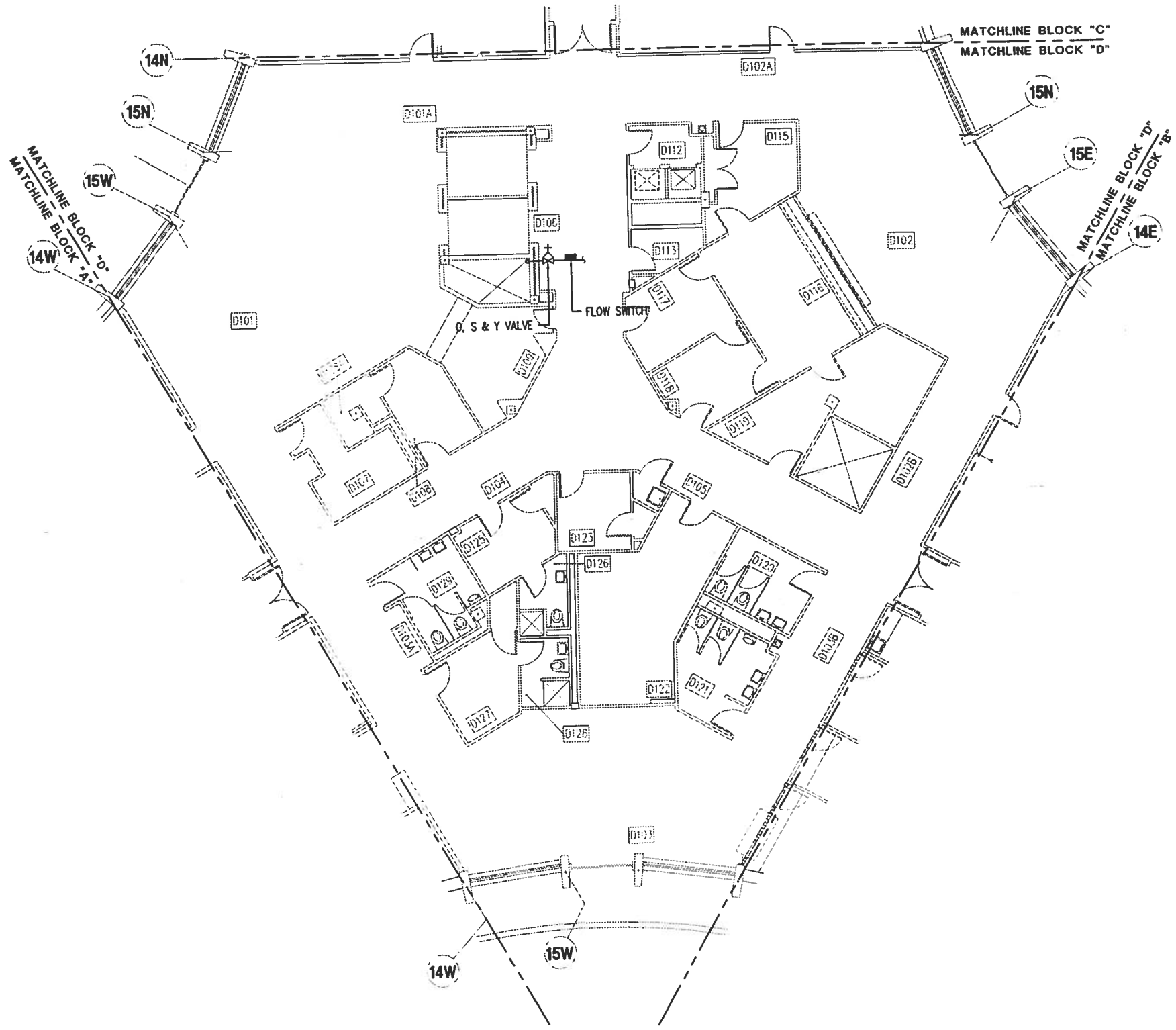

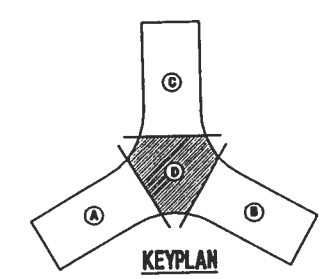

KEYPLAN

0 5 10 15 20
GRAPHIC SCALE
1/8"=1'-0"

FIRE PROTECTION FIRST FLOOR PLAN BLOCK "D"

SCALE: 1/16" = 1'-0"

SHERLOCK, SMITH & ADAMS, INC.
ARCHITECTS – ENGINEERS
MONTGOMERY, ALABAMA

U.S. NAVAL STATION ROOSEVELT ROADS, P.R.
REPAIRS TO NAVAL HOSPITAL
FIRE PROTECTION FIRST FLOOR PLAN BLOCK "D"

CONSTR. CONTR. NO. | SPECIFICATION NO. | NAVFAC DRWG. NO. | TF NO. | SHEET ? OF ??

DEPARTMENT OF THE NAVY
NAVAL FACILITIES ENGINEERING COMMAND
NAVY PUBLIC WORKS CENTER, JACKSONVILLE, FL
U.S. NAVAL STATION ROOSEVELT ROADS, P.R.
REPAIRS TO NAVAL HOSPITAL
FIRE PROTECTION FIRST FLOOR PLAN BLOCK "D"

PLATE NO. FP1-3

PWC #

DATE | REVISION DESCRIPTION

ENG. DIV. DIR.: DATE:
SATISFACTORY TO: DATE:
DESIGN BY: ??? DRAWN BY: VTW
CHK BY: ??? APPROVED:

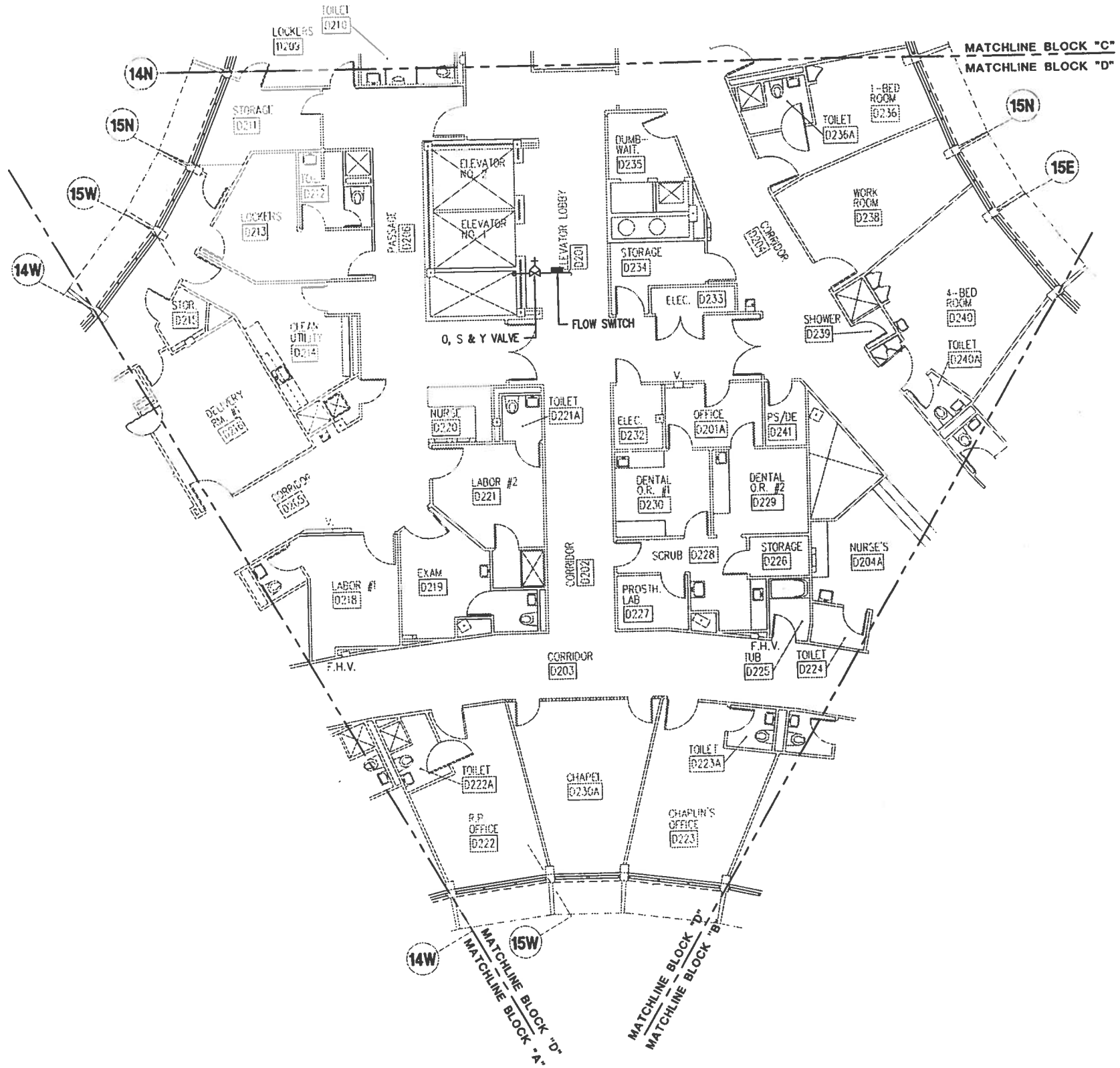

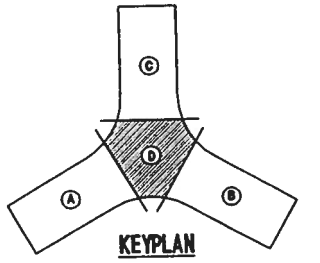

KEYPLAN

0 5 10 15 20
GRAPHIC SCALE
1/8"=1'-0"

FIRE PROTECTION SECOND FLOOR PLAN BLOCK "D"

SCALE 1/8" = 1'-0"

SHERLOCK, SMITH & ADAMS, INC.
ARCHITECTS – ENGINEERS
MONTGOMERY, ALABAMA

U.S. NAVAL STATION ROOSEVELT ROADS, P.R.
REPAIRS TO NAVAL HOSPITAL
FIRE PROTECTION SECOND FLOOR PLAN BLOCK "D"

CONSTR. CONTR. NO. | SPECIFICATION NO. | NAVFAC DRWG. NO. | TF NO. | SHEET ? OF ??

PLATE NO. FP1-4

PWC #

DEPARTMENT OF THE NAVY
NAVAL FACILITIES ENGINEERING COMMAND
NAVY PUBLIC WORKS CENTER, JACKSONVILLE, FL
U.S. NAVAL STATION ROOSEVELT ROADS, P.R.
REPAIRS TO NAVAL HOSPITAL
FIRE PROTECTION SECOND FLOOR PLAN BLOCK "D"

DESIGN BY: DUFFEE DRAWN BY: JOINER
CHK BY: YOUNG APPROVED:

ENG. DIV. DIR.: DATE:
SATISFACTORY TO: DATE:

DATE	REVISION DESCRIPTION

ELECTRICAL LEGEND

SYMBOLS & ABBREVIATIONS:

AFF	MOUNTING HEIGHT ABOVE FINISHED FLOOR OR GRADE TO CENTERLINE.
BL	BED LIGHT
CL	CEILING MOUNTED
CW	DEVICE MOUNTS IN CASEWORK BUT NOT FURNISHED WITH CASEWORK.
•D	AFTER FIXTURE MARK INDICATES FIXTURE TO BE PROVIDED WITH DIMMING BALLAST AND 30W OR 40W LAMPS AS REQUIRED.
ER	EXISTING EQUIPMENT, RECONNECT AS SHOWN.
GFI	GROUND FAULT CIRCUIT INTERRUPTER.
HG	HOSPITAL GRADE RECEPTACLE
REC	RECEPTACLE(S)
RX	ROMEX WIRE
PV	PVC CONDUIT
TV	TELEVISION
TX	TRANSFORMER
WP	RAINTIGHT (NEMA 3R CLASSIFICATION).

SWITCHES:

S	FLUSH TYPE, 20A, 120/277V AC ONLY, QUIET TYPE, 1-POLE
S_2	FLUSH TYPE, 20A, 120/277V AC ONLY, QUIET TYPE, 3 WAY
S_3	FLUSH TYPE, 20A, 120/277V AC ONLY, QUIET TYPE, 3 WAY
S_4	FLUSH TYPE, 20A, 120/277V AC ONLY, QUIET TYPE, 4 WAY
S_a	CONTROLS OUTLET "a" ETC.
S_P	WITH RED PILOT LIGHT, "ON" WHEN SWITCH IS "ON". ENGRAVE PLATE TO CLEARLY INDICATE EQUIPMENT CONTROLLED (AND LOCATION IF NOT OBVIOUS).
S_{P3}	SAME AS S_P EXCEPT 3 WAY
S_D	SOLID STATE DIMMER, INCANDESCENT OR FLUORESCENT AS REQUIRED FOR LIGHTS PROVIDED. WATTAGE TO BE MINIMUM OF 125% OF TOTAL FIXTURE WATTAGE CONTROLLED OR AS INDICATED ON DRAWING.

ESSENTIAL ELECTRICAL SYSTEM DESIGNATIONS:

L	LIFE SAFETY BRANCH
C	CRITICAL BRANCH
Q	EQUIPMENT BRANCH
	NORMAL SYSTEM
RX	ROMEX WIRING
PV	PVC CONDUIT

BRANCH CIRCUITS:

	CONCEALED IN OR BELOW FLOORS.
	EXPOSED CONDUIT.
	FLEXIBLE CONDUIT TO EQUIPMENT
	CONCEALED OVERHEAD OR IN WALLS.

NOTE: CIRCUITS SHOWN L2A: 3 INDICATES 1 #12 PHASE CONDUCTOR, 1 #12 NEUTRAL & 1 #12 GND - 1/2" C. TO 20 AMP, 1 POLE BREAKER ON CIRCUIT No. 3, IN PANEL "L2A".

L2A: 2,4 INDICATES 2 # 12 PHASE CONDUCTORS, 1 #10 NEUTRAL & 1 #12 GND - 1/2 C. TO 20 AMP, 1 POLE BREAKER ON CIRCUIT No.'s 2 & 4 IN PANEL "L2A"

L2A: 2,4,6 INDICATES 3 #12 PHASE CONDUCTORS, 1 #10 NEUTRAL & 1 #12 GND - 3/4" C. TO 20 AMP 1 POLE BREAKERS ON CIRCUIT No.'S 2,4,6, IN PANEL "L2A" ETC PER NEC OR AS INDICATED. 10's INDICATES ALL CONDUCTORS ARE TO BE MINIMUM #10 GAUGE. CONDUIT PER NEC OR AS INDICATED. 3-30A/2P INDICATES CONNECTED TO THREE(3) 30 AMP 2 POLE BREAKERS ("2-40A/1P" INDICATES TWO 40 AMP, 1 POLE BREAKERS. ETC.) ON LIGHTING PLANS A #12 NEUTRAL MAY BE UTILIZED RATHER THAN A #10 NEUTRAL TO 20 AMP 1 POLE BREAKERS ON CIRCUIT No.'S 2,4,6, IN PANEL "L2A" ETC.

POWER, PANELS & POWER EQUIPMENT

	PANELBOARD - SURFACE MOUNTED - SEE PANELBOARD SCHEDULE
	PANELBOARD - RECESSED - SEE PANELBOARD SCHEDULE
	DISTRIBUTION PANELBOARD OR SWITCHBOARD - SEE PANEL SCHEDULE
	DISCONNECT SWITCH, NON-FUSIBLE, SIZE AND TYPE AS NOTED OR AS SHOWN ON SCHEDULE ON PLATE
	DISCONNECT SWITCH, FUSIBLE, SIZE, TYPE AND FUSED AS NOTED, FUSE PER MANUFACTURER'S RECOMMENDATION. NON-FUSED SWITCH MAY BE USED IF UNIT IS UL TESTED WITH BREAKER PROTECTION. SIZE, TYPE AND FUSES AS NOTED OR AS SHOWN ON SCHEDULE ON PLATE.

POWER, PANELS & POWER EQUIPMENT (CONTINUED)

	MOLDED CASE CIRCUIT BREAKER
M	MAGNETIC TRIP ONLY CIRCUIT BREAKER.
	MOLDED CASE CIRCUIT BREAKER WITH SOLID STATE TRIP
	DRAWOUT AIR CIRCUIT BREAKER
T	TRANSFORMER - DRY TYPE - RATING AS SHOWN.
B	CIRCUIT BREAKER IN NEMA 1 ENCLOSURE - SURFACE MOUNTED
B_F	CIRCUIT BREAKER IN NEMA 1 ENCLOSURE - FLUSH MOUNTED.

MISCELLANEOUS EQUIPMENT:

C	ELECTRIC CLOCK, TYPE AS SHOWN
J_E	ELAPSED TIME CLOCK AND CONTROLLER
	BRACKET TYPE FIXTURE
	EXIT LIGHT
S_F	PASSIVE INFRARED OCCUPANCY SENSOR - WALL MOUNTED IN EXISTING LOCATION FOR LIGHT SWITCH.
S_C	ULTRASONIC OCCUPANCY SENSOR - CEILING MOUNTED.
S_{C1}	PASSIVE INFRARED OCCUPANCY SENSOR - CEILING MOUNTED.

GROUNDING

	GROUND ROD(S).
G	GROUND HOMERUN 1#12, 1/2"C.

CEILING OUTLETS:

FS1 a b	SURFACE MOUNTED FIXTURE, SHOWN FIXTURE MARK "FS1", CIRCUIT No. 8, CONTROLLED BY SWITCH "b" TYPICAL. WHERE 2 SUBSCRIPT LETTERS ARE SHOWN BY FIXTURE SUCH AS "a" & "b" THE INBOARD LAMPS SHALL BE CONTROLLED BY SWITCH "a" AND THE OUTBOARD LAMPS BY SWITCH "b".
	LIGHTING FIXTURE - MOUNTING AND TYPE AS SHOWN IN FIXTURE SCHEDULE.
	EXIT LIGHT - NUMBER AND DIRECTION OF FACES AS SHOWN BY COLORED IN SECTION. SHOWN SINGLE FACE. PROVIDE ARROWS AS INDICATED ON ELECTRICAL PLANS OR FIRE PROTECTION PLANS.
	LIGHTING FIXTURE ON EMERGENCY POWER (OR WITH BATTERY PACK)
	LIGHTING FIXTURE ON EMERGENCY POWER AND WITH BATTERY PACK.

WALL RECEPTACLES:

	SINGLE RECEPTACLE - 20A, MTD. 18" AFF UNLESS OTHERWISE NOTED.
	DUPLEX RECEPTACLE, HG, 20A, 125V., 2P-3 WIRE, MOUNT 1'-6" AFF, UNLESS NOTED OTHERWISE NEMA 5-20R.
	DUPLEX RECEPTACLE, HG, 20A, 125V, 2P-3 WIRE, MOUNT BOTTOM OF RECEPTACLE COVER PLATE 2" ABOVE COUNTER OR BACKSPLASH. IF NO COUNTER THEN MOUNT 3'-8" AFF, NEMA 5-20R.
	DOUBLE DUPLEX RECEPTACLE, HG, 20A, 125V, 2P-3 WIRE, MOUNT BOTTOM OF RECEPTACLE COVER PLATE 2" ABOVE COUNTER OR BACKSPLASH. IF NO COUNTER THEN MOUNT 3'-8" AFF, NEMA 5-20R.
5-30R	SPECIAL RECEPTACLE - NEMA CONFIGURATION AS SHOWN ON FLOOR PLANS OR IN EQUIPMENT SCHEDULE - SHOWN NEMA 5-30R.
GFI	DUPLEX RECEPTACLE, HG, 20A, 125V, 2P-3 WIRE, WITH GROUND FAULT INTERRUPTING.
CW	DUPLEX RECEPTACLE, HG, MOUNTED IN CASEWORK
TV	DUPLEX RECEPTACLE, HG, MOUNTED IN CEILING

JUNCTION BOXES:

J	IN OR ABOVE CEILING
J	IN WALL - MOUNT 1'-6" UNLESS NOTED OTHERWISE.
J	WITH FLEXIBLE CONNECTION TO EQUIPMENT
J_{WP}	CAST BOX WITH WEATHERPROOF COVER

CONTROLS & MECHANICAL EQUIPMENT:

	MOTOR CONTROLLER - MAGNETIC - MOUNTS IN MOTOR CONTROL CENTER
	MOTOR CONTROLLER - MAGNETIC - MOUNTS IN SEPARATE ENCLOSURE FURNISHED BY MECHANICAL, INSTALLED BY ELECTRICAL - COORDINATE LOCATION WITH MECHANICAL. REPLACEMENT STARTERS FOR CONVERSION TO 480 VOLT FURNISHED BY ELECTRICAL.
VF	COMBINATION VARIABLE SPEED MOTOR CONTROLLER AND DISCONNECT
S_M	MOTOR SNAP SWITCH WITH THERMAL OVERLOAD PROTECTION. 20A, 1 POLE UNLESS NOTED OTHERWISE.
M	MOTOR - ELECTRICAL CHARACTERISTICS AS NOTED.
	COMBINATION STARTER - MOUNTS IN SEPERATE ENCLOSURE - MAGNETIC STARTER, OVERLOAD RELAY, NON-FUSED DISCONNECT. 50VA CONTROL TRANSFORMER, 1A/1B CONTACTS.

COMMUNICATIONS SYSTEM:

CEILING OUTLETS

	SMOKE DETECTOR
S	PAGING SYSTEM, CEILING SPEAKER
	NURSE CALL SYSTEM DOME LIGHT

LIGHTNING PROTECTION SYSTEM:

CEILING OUTLETS

	LIGHTNING PROTECTION CONDUCTOR
AT	LIGHTNING PROTECTION AIR TERMINAL
	LIGHTNING PROTECTION CONNECTION DOWN CONDUCTOR AND GROUND ROD
	EXHAUST FAN
	ROOF DRAIN

SEAL AREA

REVISION DESCRIPTION	DATE

ENG. DIV. DIR.: DATE
SATISFACTORY TO: DATE
DESIGN BY: JEA DRAWN BY: CBN

DEPARTMENT OF THE NAVY
NAVAL FACILITIES ENGINEERING COMMAND
NAVY PUBLIC WORKS CENTER, JACKSONVILLE, FL
U.S. NAVAL STATION ROOSEVELT ROADS, P.R.
REPAIRS TO NAVAL HOSPITAL
ELECTRICAL LEGEND

SHERLOCK, SMITH & ADAMS, INC.
ARCHITECTS - ENGINEERS
MONTGOMERY, ALABAMA

U.S. NAVAL STATION ROOSEVELT ROADS, P.R.
REPAIRS TO NAVAL HOSPITAL
ELECTRICAL LEGEND

CONSTR. CONTR. NO. | SPECIFICATION NO. | NAVFAC DRWG. NO. | TF NO. | SHEET ? OF ??

PLATE NO. E00-1

PWC #