COMPOSITE FIRST FLOOR PLAN

0 10 20 30 40
GRAPHIC SCALE
1/16" = 1'-0"

ROOM LISTING

NOTE: ROOM NUMBERS & NAMES THAT ARE BOLD OCCUR IN ADDITIONS TO EXISTING BLDG.

ROOM NO.	ROOM NAME
A101	CORRIDOR
A101A	WAITING
A101B	CONTROL
A101C	SCREENING
A102	CORRIDOR
A102A	CONTROL
A103	CORRIDOR
A103A	E.R. CONTROL
A104	CORRIDOR
A105	CORRIDOR
A106	SOILED
A107	STAFF LOCKERS
A108	EXAM
A109	UTILITY
A110	EXAM
A111	SUTURE
A112	OB/ENT
A113	OFFICE
A114	VESTIBULE
A115	TOILET
A116	OFFICE
A117	TRAUMA ROOM
A118	VESTIBULE
A119	EXAM
A120	DOCTOR'S OFFICE
A121	TOILET
A122	DIVING MED. OFFICE
A124	DOCTOR'S OFFICE
A125	DOCTOR'S OFFICE
A126	MEDICAL OFFICER
A127	EXAM
A128	EXAM
A129	DOCTOR'S OFFICE
A130	TRIAGE OFFICE
A131	DOCTOR'S OFFICE
A132	TREATMENT
A133	ELECTRICAL ROOM
A134	LAB OFFICE
A135	TOILET
A136	EXAM
A137	DOCTOR'S OFFICE
A138	WORK ROOM
A-139	OFFICE
A140	EXAM
A141	DOCTOR'S OFFICE
A142	DOCTOR'S OFFICE
A143	EXAM
A144	EXAM
A145	WORK ROOM
A146	CHECK-IN
A147	DOCTOR'S OFFICE
A148	DIV OFFICE
A149	DOCTOR'S OFFICE
A150	WORK ROOM
A151	EXAM
A152	WEIGHTS & MEASURES
A153	OFFICE
A154	TOILET
A155	EXERCISE
A155A	TREATMENT
A155B	TREATMENT
A155C	WHIRLPOOL
A156	STORAGE
A157	DOCTOR'S OFFICE
A158	TREATMENT
A159	TREATMENT
A160	PT STOR./LKR. RM.
A161	DOCTOR'S OFFICE
A162	DOCTOR'S OFFICE
A163	DOCTOR'S OFFICE
A164	TREATMENT
A165	CAST
A166	STORAGE
A167	EXAM
A168	DIV. OFFICE
A169	MINOR SURGERY
A170	TOILET
A171	TOILET
A172	SOILED
A173	PROCTOLOGY
A174	DOCTOR'S OFFICE
A174A	TOILET
A175	OUTPATIENT NURSING
A1101	**ELECTRICAL ROOM**
A1102	**MECHANICAL AREA**
B101	CORRIDOR
B101A	WAITING
B102	CORRIDOR
B102A	WAITING
B102B	CONTROL
B102C	PATIENT HOLDING
B102D	BARIUM
B103	CONTROL
B104	WAITING
B105	STAFF LOUNGE
B106	STORAGE
B107	STORAGE
B108	SPECIMEN TOILET
B109	PASSAGE
B110	DONOR ROOM
B111	TOILET
B112	TECH. WORK
B113	MICROBOLOGY
B114	EMERG. SHOWER
B115	BLOOD BANK
B116	HEMOTOLOGY
B117	HYSTO/CYTO
B118	STORAGE
B119	STORAGE
B120	PATHOLOGIST
B121	OFFICE
B122	LABORATORY
B123	STORAGE
B124	STORAGE
B125	PASSAGE
B126	ULTRA SOUND ADMIN.
B127	ULTRA SOUND
B128	VAULT
B129	STORAGE
B130	MAMMOGRAPHY
B131	VESTIBULE
B131A	DRESSING
B131B	DRESSING
B131C	DRESSING
B131D	DRESSING
B131E	DRESSING
B132	X-RAY NO. 1
B132A	CONTROL
B132B	CONTROL
B133	FILM STORAGE
B134	X-RAY NO. 2
B134A	CONTROL
B134B	TOILET
B135	X-RAY NO. 3
B136	PANOGRAPHIC UNIT
B137	STORAGE
B138	TOILET
B139	DARK ROOM
B140	FILM STORAGE/WORK
B141	WORK ROOM
B142	SECRETARY
B142A	OFFICE
B143	ELECTRICAL ROOM
B144	DUTY BEDROOM
B145	TOILET
B146	CHIEF OF RADIOLOGY
B147	ELECTRICAL ROOM
B148	TOILET
B149	URODYNAMICS
B150	EXAM
B151	DOCTOR'S OFFICE
B152	LAB
B153	LPO OFFICE
B154	HOUSE KEEPING
B155	PASSAGE
B156	STERILE WORK RM
B157	CYSTO
B157A	CONTROL
B159	TOILET
B161	PHARMACY
B162	ALCOHOL VAULT
B163	CHIEF OF PHARMACY
B164	PHARMACY ISSUE
B165	I.V. PREP
B166	INPATIENT PHARMACY
B167	STORAGE/LOCKERS
B1101	**ELECTRICAL ROOM**
C101	CORRIDOR
C102	CORRIDOR
C102A	VENDING
C102B	CONTROL
C102C	INTERNAL MEDICINE
C103	CORRIDOR
C104	CORRIDOR
C104A	WAITING
C104B	CONTROL
C105	CORRIDOR
C108	EXAM
C109	NUTRITION CLINIC
C110	CHIEF OF SERVICE
C111	DOCTOR'S OFFICE
C112	EXAM
C113	OFFICE
C114	OFFICE
C115	EKG
C116	STORAGE
C117	CLEAN
C118	TOILET
C119	OFFICE
C120	TOILET
C121	AUDIOLOGIST
C122	EXAM
C123	AUDIO TESTING
C124	DOCTOR'S OFFICE
C125	OCCUPATIONAL HEALTH
C126	OFFICE
C127	PHYSICAL EXAM
C128	TOILET
C129	TOILET
C13D	EYE EXAM
C131	WEIGHTS/MEASURES/EKG
C132	OFFICE
C133	FLEET LIAISON
C134	DEPT. HEAD
C134A	WAITING
C135	EARLY INTERVIEW
C136	TOILET
C137	CARRIER COUNSELOR
C138	TOILET
C139	EYE LANE
C140	SOILED
C141	TOILET
C142	TOILET
C143	OFFICE
C144	VISUAL FIELD
C145	MINOR PRECEDURE
C146	VISUAL TEST
C147	EYE EXAM
C148	PASSAGE
C149	OFFICE
C150	OFFICE
C151	OCULAR PHOTOGRAPHY
C152	ELECTRICAL ROOM
C153	DOCTOR'S OFFICE
C154	FITTING
C155	HOUSE KEEPING
C156	EXAM
C157	EXAM
C158	DISASTER PREP
C159	DOCTOR'S OFFICE
C160	EXAM
C161	EXAM
C162	STORAGE
C163	EXAM
C164	IMMUN CLINIC
C165	PED. LEAD PREVENTION
C166	TEMP./WGT /MEASURE
C167	OFFICE
C168	LAB STORAGE
C169	TREATMENT
C170	EXAM/ISOLATION
C171	TOILET
C172	TOILET
C173	CONTROL
C174	WAITING
C1101	**ELECTRICAL ROOM**
D101	OPD LOBBY & WAIT.
D101A	CORRIDOR
D102	OPD LOBBY & WAIT.
D102A	CORRIDOR
D102B	CORRIDOR
D103	WAITING
D103A	CORRIDOR
D103B	CORRIDOR
D104	CORRIDOR
D105	CORRIDOR
D106	ELEVATOR LOBBY
D107	WOMEN TOIL.
D108	DUTY CORPM. B.R.
D108A	TOILET
D109	INFORMATION DESK
D112	STORAGE
D113	COMMUNICATIONS RM.
D115	OFFICE
D116	OUTPATIENT RECORDS
D117	COPY/WORK ROOM
D118	O.P. RECORDS OFFICE
D119	OUTPATIENT RECORDS
D120	WOMEN TOIL.
D121	MEN TOIL.
D122	CHIEF OF DAY OFFICE
D123	ELECTRICAL ROOM
D125	DUTY CHIEF B.R.
D126	TOILET
D127	DUTY OFFICE B.R.
D128	TOILET
D129	MEN TOIL.

SHERLOCK, SMITH & ADAMS, INC.
ARCHITECTS – ENGINEERS
MONTGOMERY, ALABAMA

U.S. NAVAL STATION ROOSEVELT ROADS, P.R.
REPAIRS TO NAVAL HOSPITAL
COMPOSITE FIRST FLOOR PLAN

CONSTR. CONTR. NO.	SPECIFICATION NO.	NAVFAC DRWG. NO.	TF NO. XXXXX
XXXXX	XXXXX	XXXXX	SHEET ? OF ??

SEAL AREA

REVISION DESCRIPTION

DATE

ENG. DIV. DIR.: DATE:
SATISFACTORY TO: DATE:

DESIGN BY: RAC DRAWN BY: CT

NAVAL FACILITIES ENGINEERING COMMAND
DEPARTMENT OF THE NAVY
NAVY PUBLIC WORKS CENTER, JACKSONVILLE, FL
U.S. NAVAL STATION ROOSEVELT ROADS, P.R.
REPAIRS TO NAVAL HOSPITAL
COMPOSITE FIRST FLOOR PLAN

PLATE NO.
A2-2

PWC # XXXXX

COMPOSITE SECOND FLOOR PLAN

GRAPHIC SCALE 0 10 20 30 40
1/16" = 1'-0"

ROOM LISTING

NOTE: ROOM NUMBERS & NAMES THAT ARE BOLD OCCUR IN ADDITIONS TO EXISTING BLDG

ROOM NO.	ROOM NAME
A201	CORRIDOR
A202	CORRIDOR
A202A	NURSE
A203	CORRIDOR
A205	CORRIDOR
A206	CORRIDOR
A207	VESTIBULE
A208	1-BED ROOM
A208A	TOILET
A209	HOUSE KEEPING
A210	DIV. OFFICER
A211	LPO/GYN OFFICE
A212	OFFICE/EXAM
A212A	TOILET
A213	OFFICE/EXAM
A213A	TOILET
A214	SHOWER
A215	CLEAN
A216	SOILED
A217	SITZ
A218	SHOWER
A219	1-BED ROOM
A219A	TOILET
A220	2-BED ROOM
A20A	TOILET
A221	2-BED ROOM
A221A	TOILET
A222	CONTROL
A222A	TOILET
A223	OB/GYN CLINIC WAIT
A224	SHOWER
A225	OFFICE/EXAM
A226	SHOWER
A227	SOIL
A228	SUPPLY
A229	SHOWER
A230	4-BED ROOM
A230A	TOILET
A231	WORK AREA
A232	PASSAGE
A234	FORM ROOM
A236	FULL TERM NURSERY
A237	CLEAN
A238	ELECTRICAL ROOM
A239	DIV OFFICER
A240	LPO/OB
A241	PATIENT INTERVIEW
A241A	SHOWER
A242	SHOWER
A243	4-BED ROOM
A243A	TOILET
A244	1-BED ROOM
A244A	TOILET
A245A	TOILET
A246	PREMY. NURSERY
A247	ISOLATION
A248	WORK ROOM
A249	PASSAGE
A250	DELIVERY NO 2
A251	STORAGE
A253	RECOVERY
A254	STORAGE
A255	STAFF LOUNGE
A255A	TOILET
A256	ASSIST. DIR. NURSING
A256A	TOILET
A2101	**ELECTRICAL ROOM**
B201	CORRIDOR
B202	CORRIDOR
B203	PASSAGE
B203A	PASSAGE
B203B	ADMIN. OFFICES
B204	2-BED ROOM
B204A	TOILET
B205	M.P.
B206	DOCTOR'S OFFICE
B206A	TOILET
B207	MENTAL HEALTH CLINIC
B207A	TOILET
B208	SHOWER
B209	STORAGE
B209A	NUTRITION
B210	SITZ
B210A	STORAGE
B211	SHOWER
B212	4-BED ROOM
B212A	TOILET
B213	2 BED ROOM
B213A	TOILET
B214	CLEAN
B215	WAITING ROOM
B215A	TOILET
B216	FAMILY ADV OFFICE
B216A	TOILET
B217	OFFICE
B218	OFFICE
B219	2-BED ROOM
B219A	TOILET
B220	4-BED ROOM
B220A	TOILET
B221	SHOWER
B222	TREATMENT
B223	ELECTRICAL ROOM
B224	SHOWER
B225	DOCTOR'S OFFICE
B225A	TOILET
B226	DOCTOR'S OFFICE
B228	COLLECTION AGENT
B229	2-BED ROOM
B229A	TOILET
B230	CHAMPUS
B230A	TOILET
B231	SHOWER
B232	STORAGE
B234	SHOWER
B235	LCPO NURSING SERVICE
B236	PAT. ADMIN TRANSC
B236A	TOILET
B237	PAT ADMIN. ARCHIVES
B238	TOILET
B239	OFFICE
B240	STORAGE
B241	STORAGE
B242	OVERSEAS SCREENING
B243	ADMISSION OFFICE
B243A	TOILET
B244	DEPT. HEAD
B244A	TOILET
B2101	**ELECTRICAL ROOM**
C201	CORRIDOR
C202	CORRIDOR
C203	CORRIDOR
C203A	SCRUB
C204	PASSAGE
C205	PASSAGE
C208	OPERATING ROOM
C209	SURGICAL STORAGE
C210	SPLINT/PLASTER
C211	STORAGE
C212	DOCTOR'S LOCKERS
C213	TOILET
C214	OFFICE
C215	TOILET
C216	NURSE'S LOCKERS
C217	TOILET
C218	HOUSE KEEPING
C219	OFFICE
C220	OFFICE
C221	ANESTH. TECH. WORK
C222	OPERATING ROOM
C223	SUB-STERILE
C224	OPERATING ROOM
C225	GAS STORAGE
C226	ORTHO. SUPPLY
C227	ORTHO. SUPPLY
C230	GNW STORAGE
C231	OFFICE
C231A	TOILET
C232	SHOWER
C233	RECOVERY/SCU
C235	UNIT OFFICE
C236	OFFICE
C236A	TOILET
C237	STORAGE
C238	QUITE OFFICE
C239	TOILET
C241	4-BED ROOM
C241A	TOILET
C242	SHOWER
C243	SOILED
C244	TOILET
C245	ELECT. ROOM
C246	1-BED ROOM
C246A	TOILET
C2101	**ELECTRICAL ROOM**
D201	ELEVATOR LOBBY
D201A	OFFICE
D202	CORRIDOR
D203	CORRIDOR
D204	CORRIDOR
D204A	NURSE'S
D205	CORRIDOR
D209	LOCKERS
D210	TOILET
D211	STORAGE
D212	TOILET
D213	LOCKERS
D214	CLEAN UTILITY
D215	STORAGE
D216	DELIVERY RM NO 1
D218	LABOR ROOM NO. 1
D219	EXAM.
D220	NURSE
D221	LABOR ROOM NO. 2
D221A	TOILET
D222	R.P. OFFICE
D222A	TOILET
D223	CHAPLAINS'S OFFICE
D223A	TOILET
D224	TOILET
D225	TUB
D226	STORAGE
D227	PROSTH. LAB
D22B	SCRUB
D229	DENTAL O.R. NO. 2
D230	DENTAL O.R. NO. 1
D230A	CHAPEL
D232	ELECTRICAL ROOM
D233	ELECTRICAL ROOM
D234	STORAGE
D235	STORAGE
D236	1-BED ROOM
D236A	TOILET
D238	WORK ROOM
D239	SHOWER
D240	4-BED ROOM
D240A	TOILET
D241	PS/DE

SHERLOCK, SMITH & ADAMS, INC.
ARCHITECTS – ENGINEERS
MONTGOMERY, ALABAMA

U.S. NAVAL STATION ROOSEVELT ROADS, P.R.
REPAIRS TO NAVAL HOSPITAL
COMPOSITE SECOND FLOOR PLAN

CONSTR. CONTR. NO. XXXXX | SPECIFICATION NO. XXXXX | NAVFAC DWG. NO. XXXXX | TF NO. XXXXX | SHEET ? OF ??

SEAL AREA

DIV. DIV. DIR.: DATE:
SATISF/ACTOR'S TO: DATE:
DESIGN BY: RAS DRAWN BY: RJT
CHK. BY: RAS APPROVED:

REVISION DESCRIPTION | DATE

DEPARTMENT OF THE NAVY
NAVAL FACILITIES ENGINEERING COMMAND
NAVY PUBLIC WORKS CENTER, JACKSONVILLE, FL
U.S. NAVAL STATION ROOSEVELT ROADS, P.R.
REPAIRS TO NAVAL HOSPITAL
COMPOSITE SECOND FLOOR PLAN

CONSTR. CONTR. NO. XXXXX | NAVFAC DWG. NO. XXXXX | PWC DWG. NO. XXXXX

PLATE NO. A2-3

P:\95-113\AR\113A0203.dwg, (96|192), 04/02/96 at 11:19:43 by TEMPLE_F

PWC # XXXXX

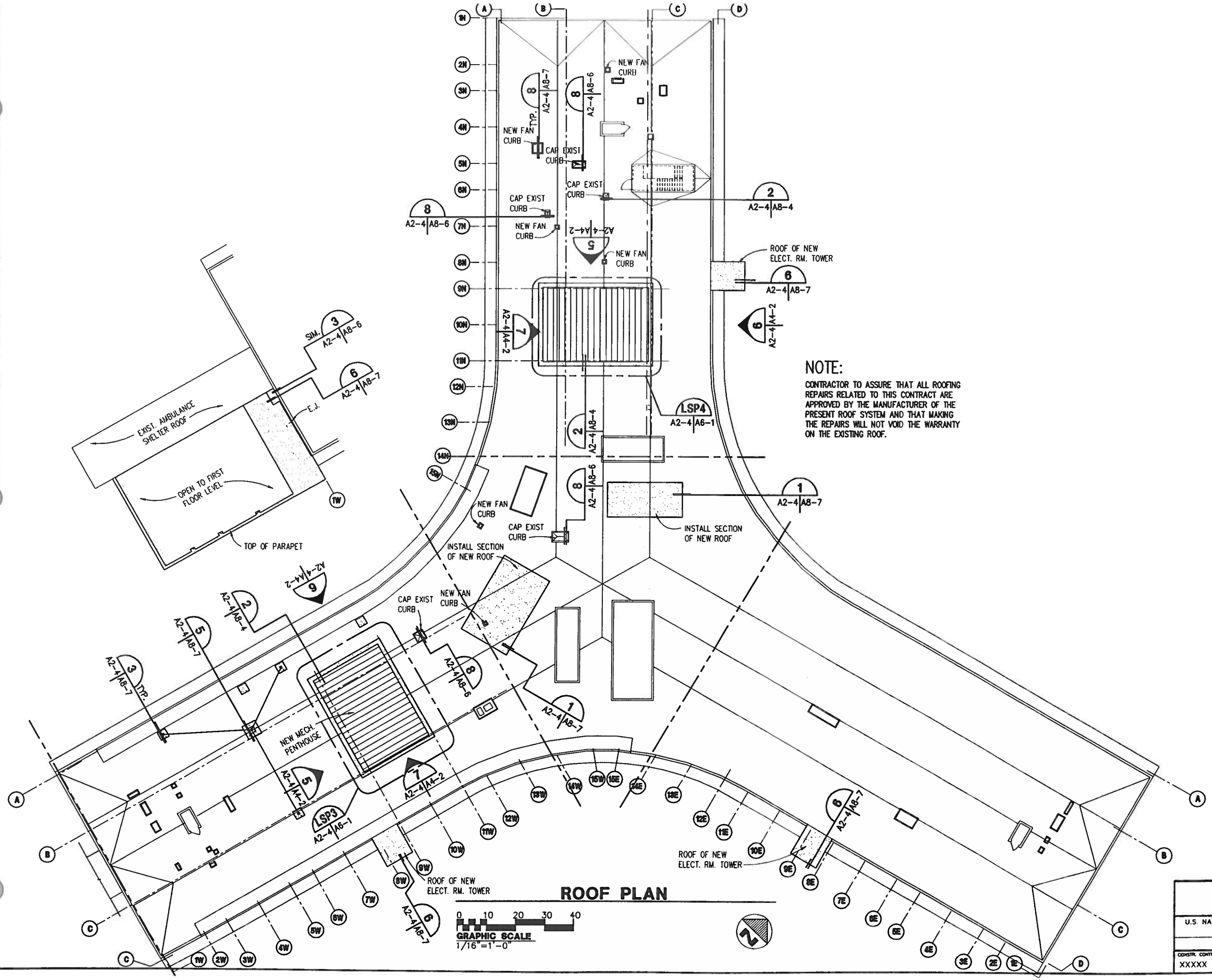

NOTE:

CONTRACTOR TO ASSURE THAT ALL ROOFING REPAIRS RELATED TO THIS CONTRACT ARE APPROVED BY THE MANUFACTURER OF THE PRESENT ROOF SYSTEM AND THAT MAKING THE REPAIRS WILL NOT VOID THE WARRANTY ON THE EXISTING ROOF.

ROOF PLAN

0 10 20 30 40
GRAPHIC SCALE
1/16"=1'-0"

SEAL AREA

ENG. DIV. DIR.: DATE:
SATISFACTORY TO: DATE:

REVISION DESCRIPTION | DATE

DEPARTMENT OF THE NAVY
NAVAL FACILITIES ENGINEERING COMMAND
NAVY PUBLIC WORKS CENTER, JACKSONVILLE, FL

U.S. NAVAL STATION ROOSEVELT ROADS, P.R.
REPAIRS TO NAVAL HOSPITAL
COMPOSITE ROOF PLAN

SHERLOCK, SMITH & ADAMS, INC.
ARCHITECTS – ENGINEERS
MONTGOMERY, ALABAMA

U.S. NAVAL STATION ROOSEVELT ROADS, P.R.
REPAIRS TO NAVAL HOSPITAL
COMPOSITE ROOF PLAN

CONSTR. CONTR. NO.	SPECIFICATION NO.	NAVFAC DRWG. NO.	TF NO. XXXXX
XXXXX	XXXXX	XXXXX	SHEET ? OF ??

PLATE NO.
A2-4

PWC # XXXXX

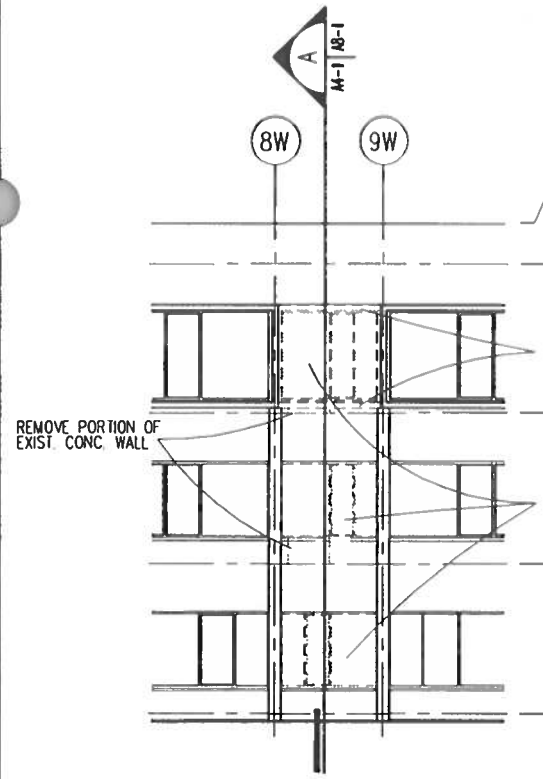

ELEVATION (DEMO) 1
SCALE: 1/8" = 1'-0"
A2-1 A2-2 A2-3 | A4-1

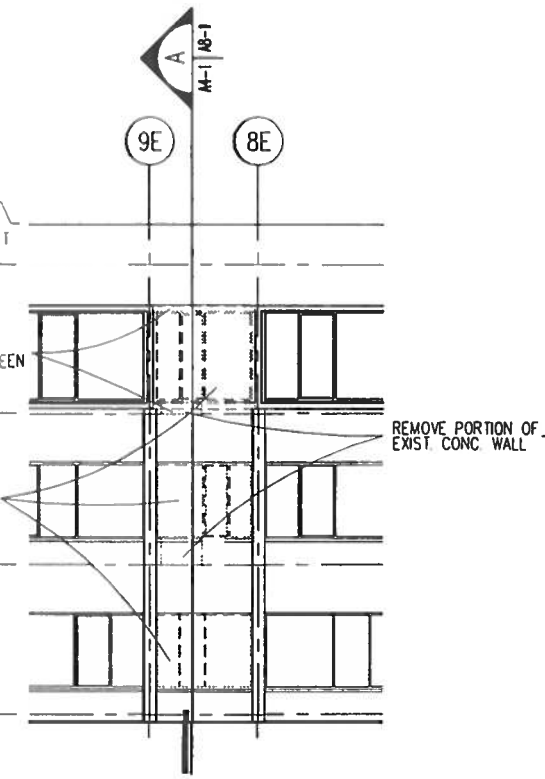

ELEVATION (DEMO) 2
SCALE: 1/8" = 1'-0"
A2-1 A2-2 A2-3 | A4-1

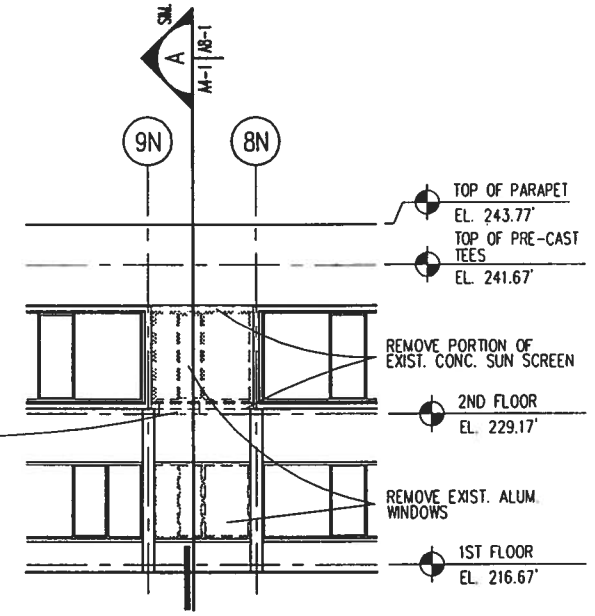

ELEVATION (DEMO) 3
SCALE: 1/8" = 1'-0"
A2-2 A2-3 | A4-1

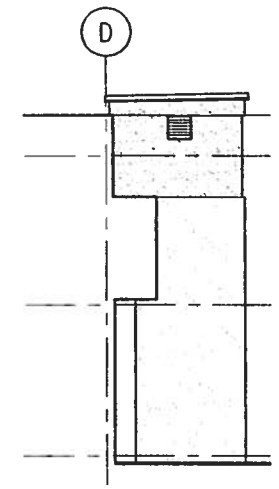

ELEVATION 4
SCALE: 1/8" = 1'-0"
A2-2 A2-3 | A4-1

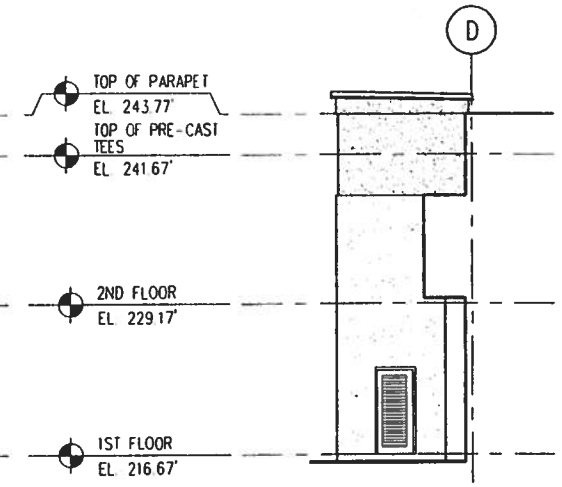

ELEVATION 5
SCALE: 1/8" = 1'-0"
A2-2 A2-3 | A4-1

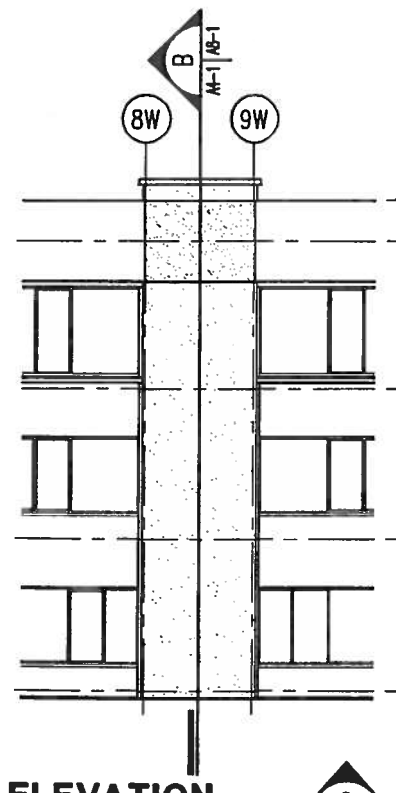

ELEVATION 6
SCALE: 1/8" = 1'-0"
A2-1 A2-2 A2-3 | A4-1

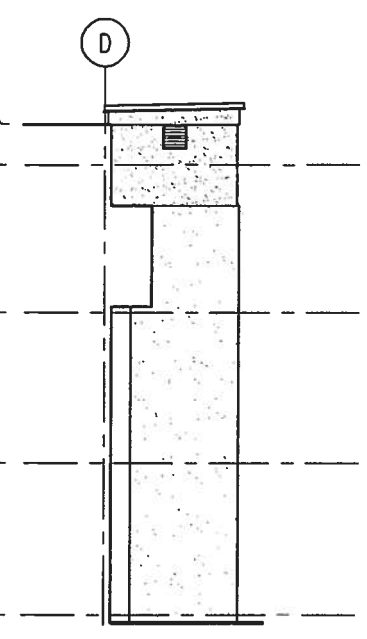

ELEVATION 7
SCALE: 1/8" = 1'-0"
A2-1 A2-2 A2-3 | A4-1

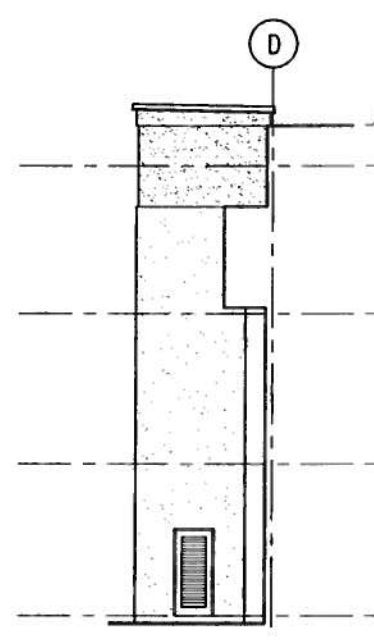

ELEVATION 8
SCALE: 1/8" = 1'-0"
A2-1 A2-2 A2-3 | A4-1

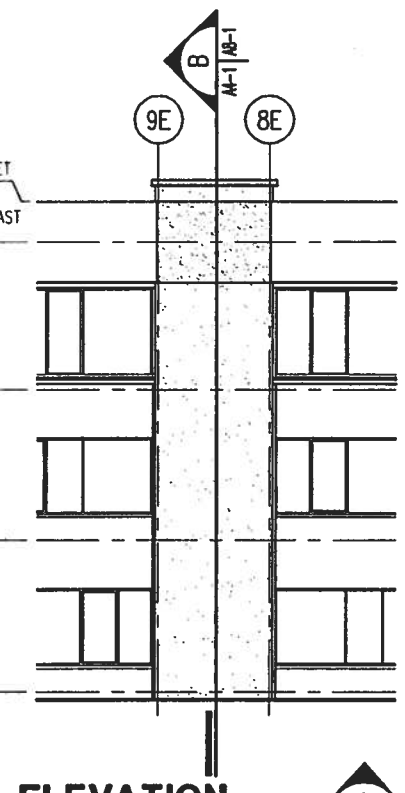

ELEVATION 9
SCALE: 1/8" = 1'-0"
A2-1 A2-2 A2-3 | A4-1

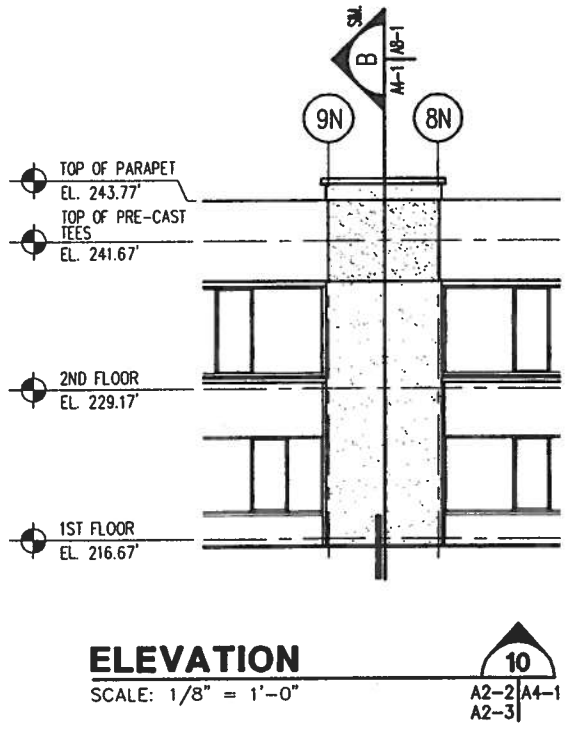

ELEVATION 10
SCALE: 1/8" = 1'-0"
A2-2 A2-3 | A4-1

0 5 10 15 20
GRAPHIC SCALE
1/8"=1'-0"

SEAL AREA

REVISION DESCRIPTION	DATE	ENG. DIV. DIR.: DATE:	SATISFACTORY TO: DATE:	DESIGN BY: RAS	DRAWN BY: RLT

NAVAL FACILITIES ENGINEERING COMMAND
DEPARTMENT OF THE NAVY
NAVY PUBLIC WORKS CENTER, JACKSONVILLE, FL
U.S. NAVAL STATION ROOSEVELT ROADS, P.R.
REPAIRS TO NAVAL HOSPITAL
EXTERIOR ELEVATIONS

SHERLOCK, SMITH & ADAMS, INC.
ARCHITECTS – ENGINEERS
MONTGOMERY, ALABAMA

U.S. NAVAL STATION ROOSEVELT ROADS, P.R.
REPAIRS TO NAVAL HOSPITAL
EXTERIOR ELEVATIONS

CONSTR. CONTR. NO.	SPECIFICATION NO.	NAVFAC DRWG. NO.	TF NO. XXXXX
XXXXX	XXXXX	XXXXX	SHEET ? OF ??

PLATE NO.
A4-1

PWC # XXXXX

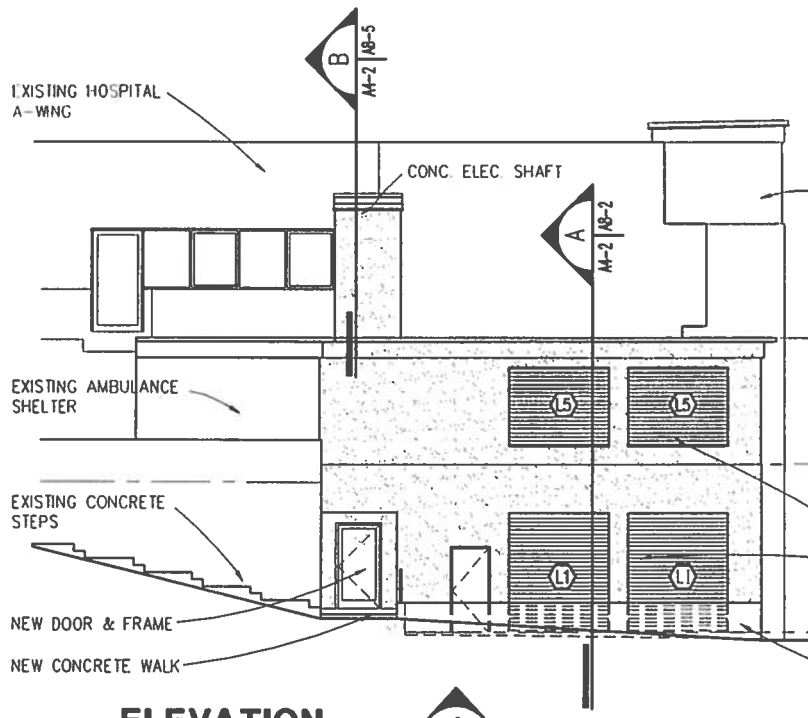

ELEVATION 1
SCALE: 1/8" = 1'-0"
A2-1 A4-2
A2-2

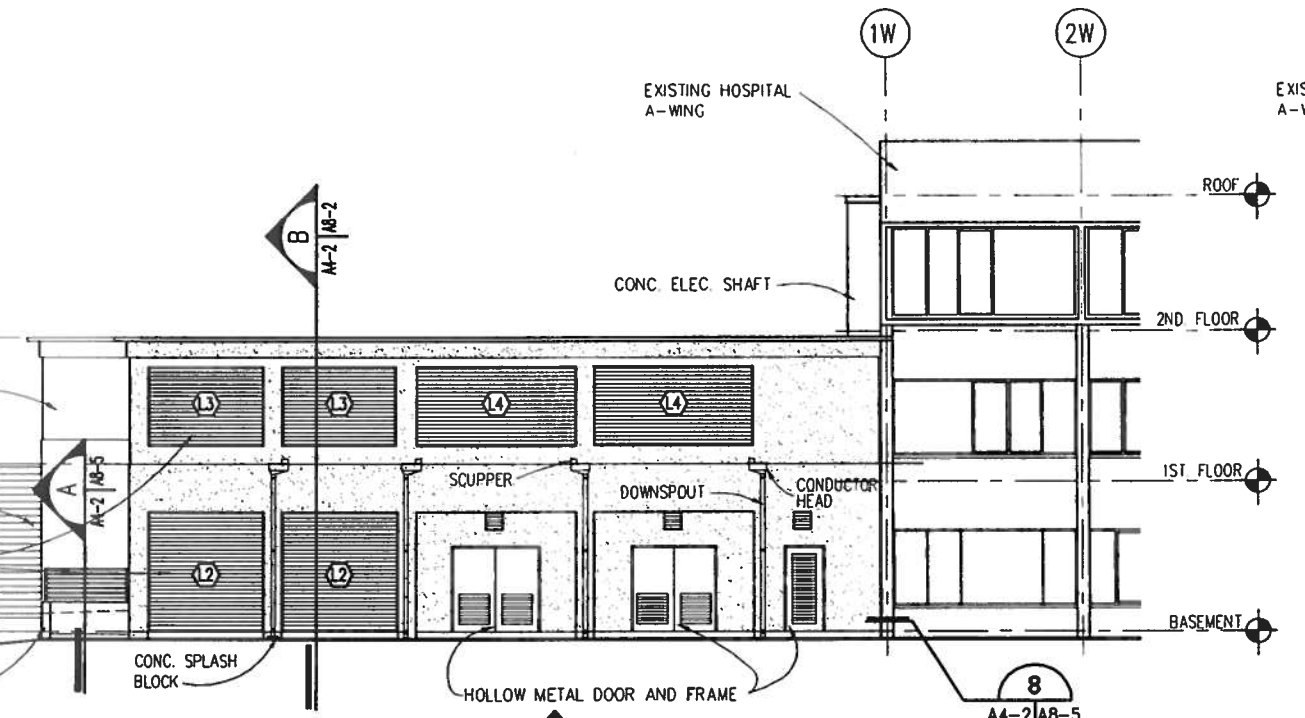

ELEVATION 2
SCALE: 1/8" = 1'-0"
A2-1 A4-2
A2-2

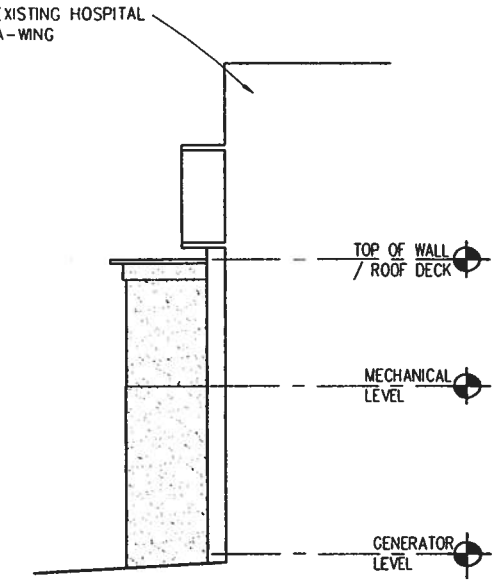

ELEVATION 3
SCALE: 1/8" = 1'-0"
A2-1 A4-2
A2-2

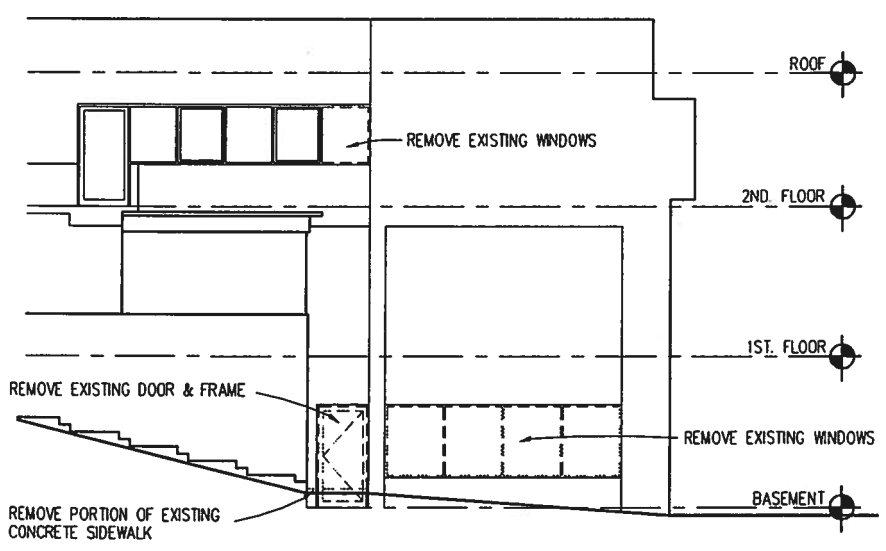

ELEVATION (DEMO) 4
SCALE: 1/8" = 1'-0"
A2-1 A4-2
A2-2

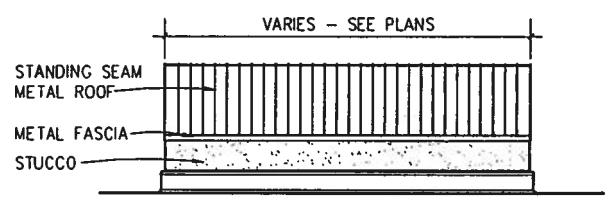

ELEVATION 5
SCALE: 1/8" = 1'-0"
A2-4 A4-2

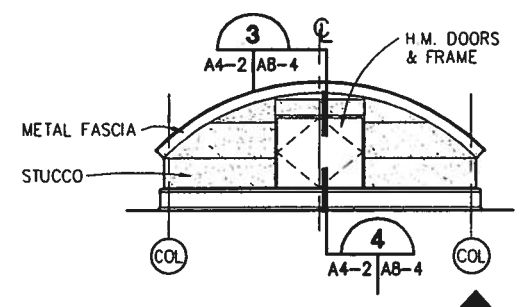

ELEVATION 6
SCALE: 1/8" = 1'-0"
A2-4 A4-2

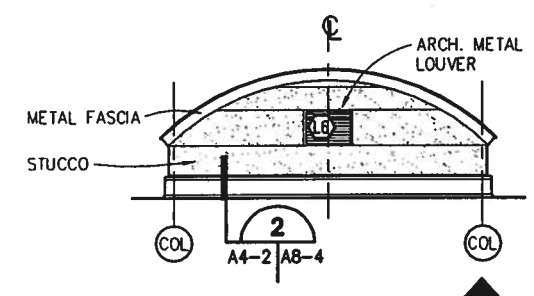

ELEVATION 7
SCALE: 1/8" = 1'-0"
A2-4 A4-2

GRAPHIC SCALE
0 5 10 15 20
1/8"=1'-0"

SHERLOCK, SMITH & ADAMS, INC.
ARCHITECTS - ENGINEERS
MONTGOMERY, ALABAMA

U.S. NAVAL STATION ROOSEVELT ROADS, P.R.
REPAIRS TO NAVAL HOSPITAL
EXTERIOR ELEVATIONS

CONSTR. CONTR. NO.	SPECIFICATION NO.	NAVFAC DRWG. NO.	TF NO. XXXXX
XXXXX	XXXXX	XXXXX	SHEET ? OF ??

PLATE NO.
A4-2

SEAL AREA

ENG. DIV. DIR.: DATE:
SATISFACTORY TO: DATE:
REVISION DESCRIPTION DATE

NAVAL FACILITIES ENGINEERING COMMAND
DEPARTMENT OF THE NAVY
NAVY PUBLIC WORKS CENTER, JACKSONVILLE, FL
U.S. NAVAL STATION ROOSEVELT ROADS, P.R.
REPAIRS TO NAVAL HOSPITAL
EXTERIOR ELEVATIONS

PWC # XXXXX

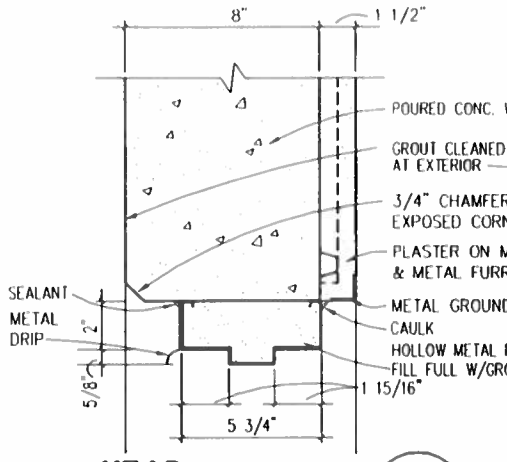

HEAD 1
SCALE: 3"=1'-0" A5-1 | A5-1

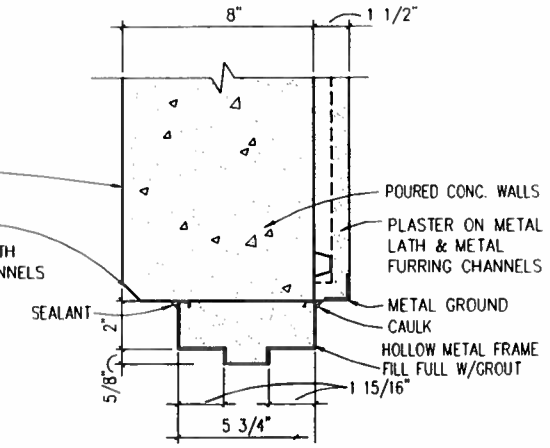

JAMB 2
SCALE: 3"=1'-0" A5-1 | A5-1

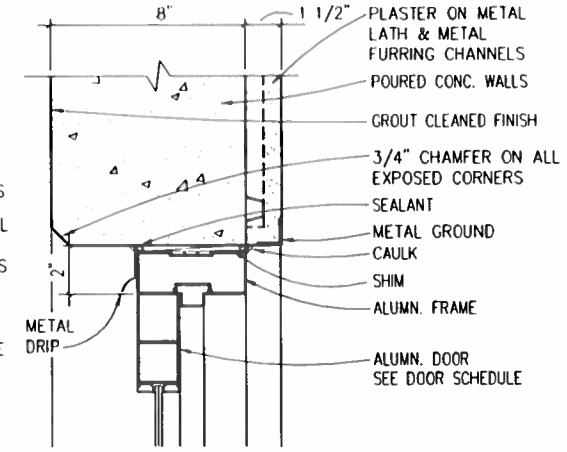

HEAD 3
SCALE: 3"=1'-0" A5-1 | A5-1

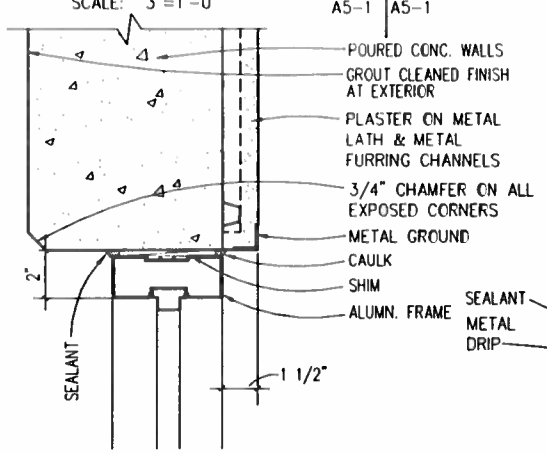

JAMB 4
SCALE: 3"=1'-0" A5-1 | A5-1

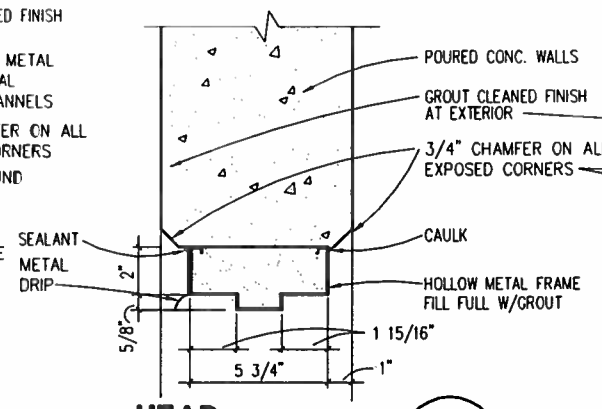

HEAD 5
SCALE: 3"=1'-0" A5-1 | A5-1

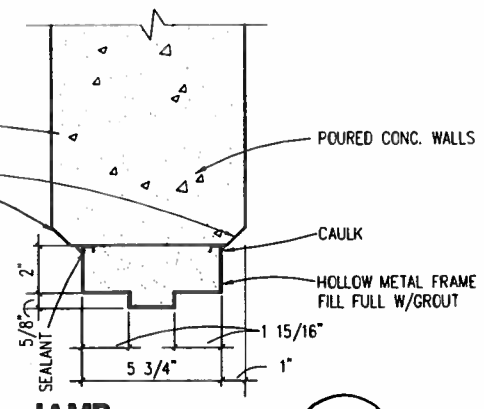

JAMB 6
SCALE: 3"=1'-0" A5-1 | A5-1

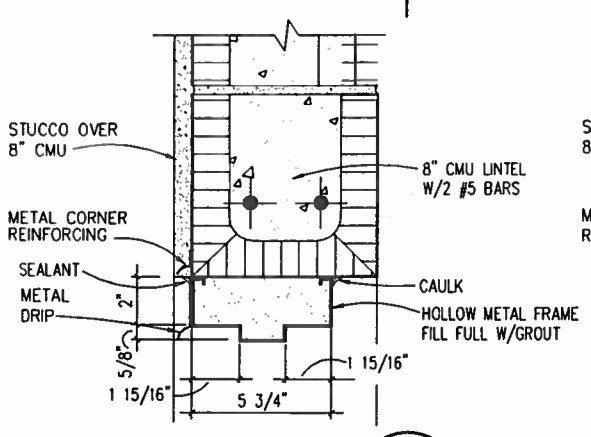

HEAD 7
SCALE: 3"=1'-0" A5-1 | A5-1

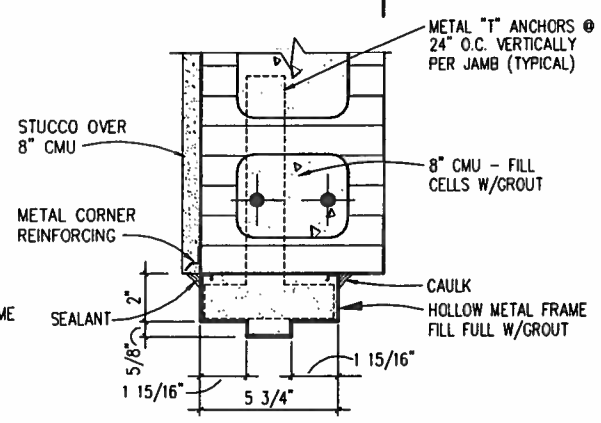

JAMB 8
SCALE: 3"=1'-0" A5-1 | A5-1

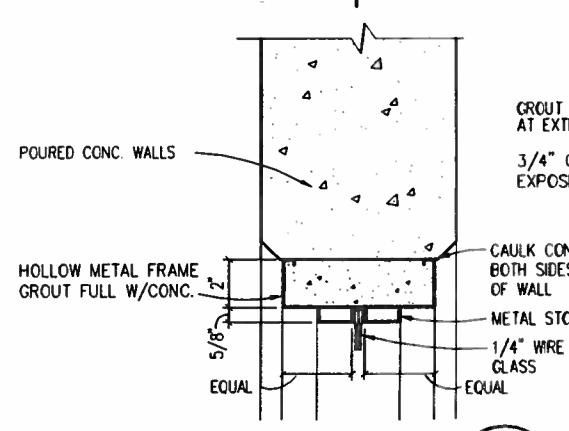

HEAD (SILL SIMILAR) 9
SCALE: 3"=1'-0" A5-1 | A5-1

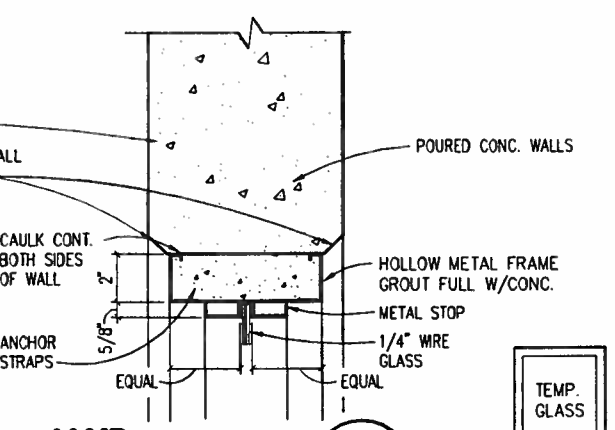

JAMB 10
SCALE: 3"=1'-0" A5-1 | A5-1

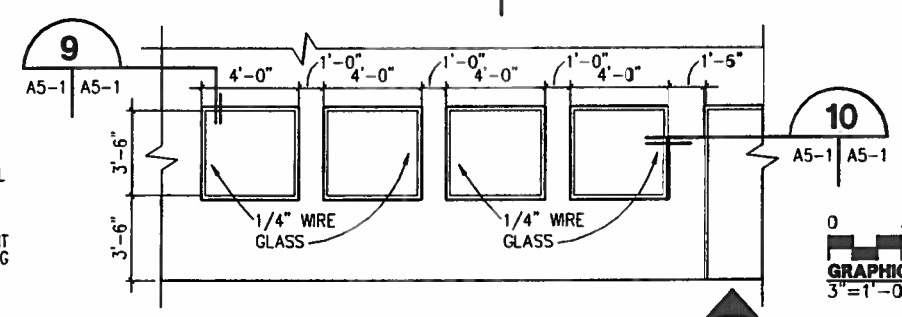

ELEVATION 11
SCALE: 1/4" = 1'-0" A5-1 | A5-1 A6-1

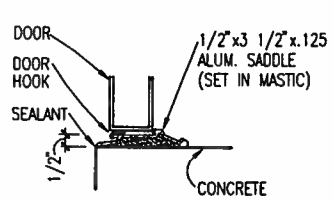

THRESHOLD TYPE 1
N.T.S.

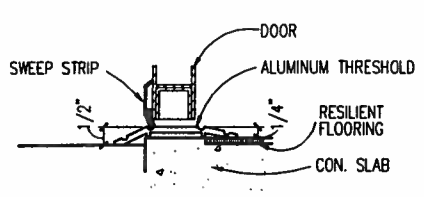

THRESHOLD TYPE 2
N.T.S.

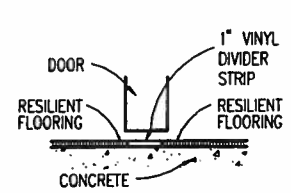

THRESHOLD TYPE 3
N.T.S.

DOOR SCHEDULE

DOOR NO.	DOOR SIZE W	DOOR SIZE H	DOOR SIZE T	DOOR TYPE	DOOR MATERIAL	FRAME TYPE	LABEL HOURS	HDW. SET	JAMB	HEAD	
A0101	3'-0"	7'-0"	1 3/4"	D	HM	HM-1	-	1	6/A5-1	5/A5-1	
A0102	3'-0"	7'-0"	1 3/4"	B	HM	HM-1	-	4	6/A5-1	5/A5-1	
A0103	PR 3'-6"	7'-0"	1 3/4"	C	HM	HM-1	-	6	6/A5-1	5/A5-1	
A0103A	3'-0"	7'-0"	1 3/4"	B	HM	HM-1	-	3	6/A5-1	5/A5-1	
A0104	PR 3'-6"	7'-0"	1 3/4"	C	HM	HM-1	-	6	6/A5-1	5/A5-1	
A0104A	3'-0"	7'-0"	1 3/4"	B	HM	HM-1	-	3	6/A5-1	5/A5-1	
A0105	3'-0"	7'-0"	1 3/4"	D	HM	HM-1	-	4	6/A5-1	5/A5-1	
A0105A	3'-0"	7'-0"	1 3/4"	B	HM	HM-1	-	3	6/A5-1	5/A5-1	
A0105B	3'-0"	7'-0"	1 3/4"	B	HM	HM-1	-	5	6/A5-1	5/A5-1	
A0106	3'-6"	7'-0"	1 3/4"	A	ALUMN.	AL-1	-	9	4/A5-1	3/A5-1	
A0106A	3'-6"	7'-0"	1 3/4"	B	HM	HM-1	-	8	*	*	* SIMILAR TO 7&8 A5-1 EXCEPT EXIST. CONST.
B0101	3'-0"	7'-0"	1 3/4"	D	HM	HM-1	-	1	6/A5-1	5/A5-1	
A1101	3'-0"	7'-0"	1 3/4"	B	HM	HM-1	90 MIN.	2	2/A5-1	1/A5-1	
A1102	3'-6"	7'-0"	1 3/4"	B	HM	HM-1	-	7	*	*	* SIMILAR TO 5&6 A5-1 EXCEPT EXIST. CONST.
B1101	3'-0"	7'-0"	1 3/4"	B	HM	HM-1	90 MIN.	2	2/A5-1	1/A5-1	
C1101	3'-0"	7'-0"	1 3/4"	D	HM	HM-1	-	1	6/A5-1	5/A5-1	
A2101	3'-0"	7'-0"	1 3/4"	B	HM	HM-1	90 MIN.	2	2/A5-1	1/A5-1	
B2101	3'-0"	7'-0"	1 3/4"	B	HM	HM-1	90 MIN.	2	2/A5-1	1/A5-1	
C2101	3'-0"	7'-0"	1 3/4"	B	HM	HM-1	90 MIN.	2	2/A5-1	1/A5-1	
A3101	PR 3'-6"	5'-10"	1 3/4"	B	HM	HM-1	-	6	8/A5-1	7/A5-1	
C3101	PR 3'-6"	5'-10"	1 3/4"	B	HM	HM-1	-	6	8/A5-1	7/A5-1	

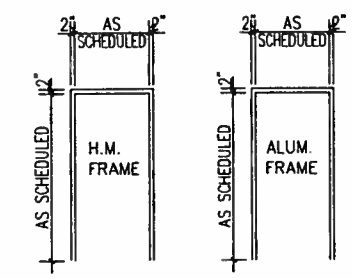

HM-1 AL-1

FRAME TYPES
SCALE : 1/4"=1'-0"

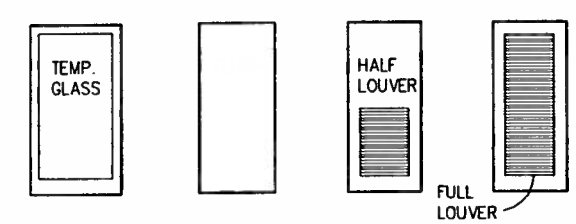

TYPE A TYPE B TYPE C TYPE D

DOOR TYPES
SCALE : 1/4"=1'-0"

GRAPHIC SCALE 3"=1'-0" (0, 3", 6", 9", 1')

GRAPHIC SCALE 1/4"=1'-0" (0, 5, 10, 15)

SHERLOCK, SMITH & ADAMS, INC.
ARCHITECTS - ENGINEERS
MONTGOMERY, ALABAMA

U.S. NAVAL STATION ROOSEVELT ROADS, P.R.
REPAIRS TO NAVAL HOSPITAL
DOOR & VIEW WINDOW

CONSTR. CONTR. NO.	SPECIFICATION NO.	NAVFAC DRWG. NO.	TF NO. XXXXX
XXXXX	XXXXX	XXXXX	SHEET ? OF ??

DEPARTMENT OF THE NAVY
NAVAL FACILITIES ENGINEERING COMMAND
NAVY PUBLIC WORKS CENTER, JACKSONVILLE, FL
U.S. NAVAL STATION ROOSEVELT ROADS, P.R.
REPAIRS TO NAVAL HOSPITAL
NDOW SCHEDULE & DETAILS

REVISION DESCRIPTION | DATE | ENG. DIV. DIR.: | DATE: | SATISFACTORY TO: | DATE:

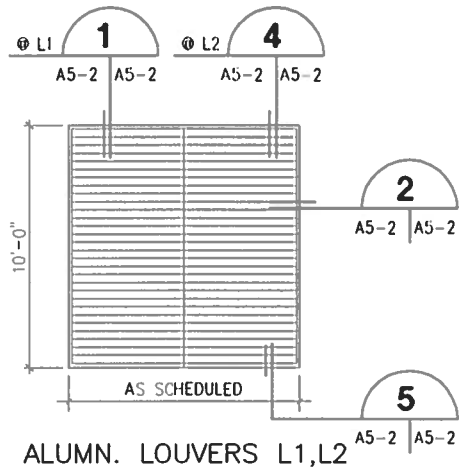

ALUMN. LOUVERS L1,L2

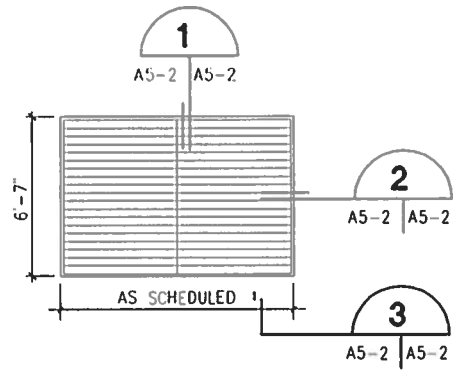

ALUMN. LOUVERS L3,L4,L5

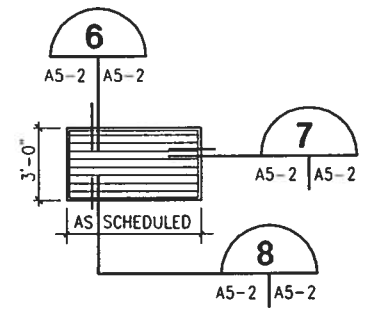

ALUMN. LOUVERS L6

LOUVER SCHEDULE

SCALE : 1/4" = 1'-0"

MK.	LENGTH	HEIGHT
L1	8'-5"	10'-0"
L2	9'-7 1/2"	10'-0"
L3	9'-7 1/2"	6'-7"
L4	13'-2"	6'-7"
L5	8'-5"	6'-7"
L6	4'-0"	3'-0"

NOTE:
FIELD VERIFY ALL OPENING SIZES PRIOR TO LOUVER FABRICATION.

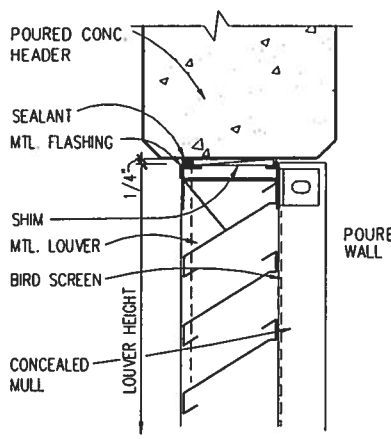

HEAD DETAIL @ ALUMN. LOUVER 1

SCALE: 3"=1'-0"

A5-2 A8-3 | A5-2

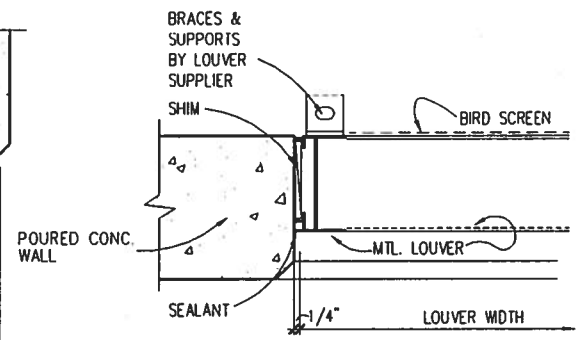

JAMB DETAIL @ ALUMN. LOUVER 2

SCALE: 3"=1'-0"

A5-2 | A5-2

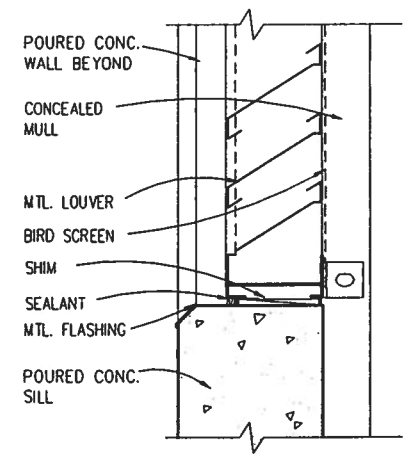

SILL DETAIL @ ALUMN. LOUVER 3

SCALE: 3"=1'-0"

A5-2 A8-3 | A5-2

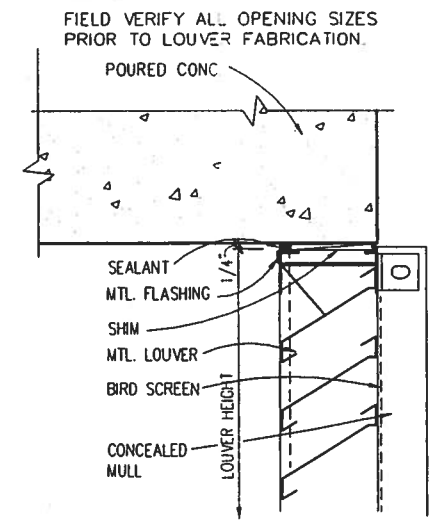

HEAD DETAIL @ ALUMN. LOUVER 4

SCALE: 3"=1'-0"

A5-2 A8-3 | A5-2

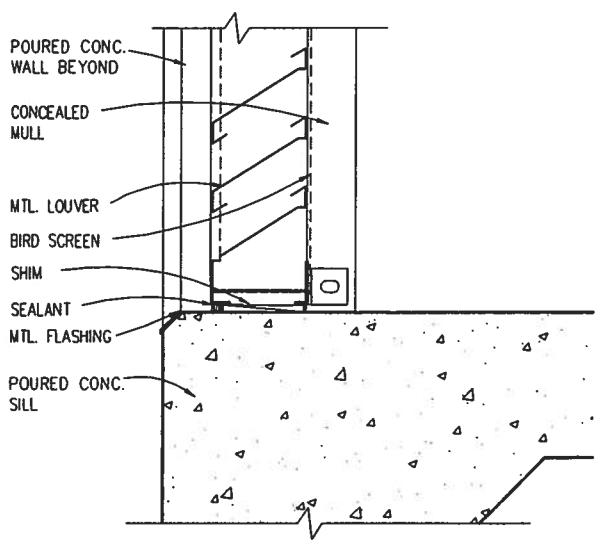

SILL DETAIL @ ALUMN. LOUVER 5

SCALE: 3"=1'-0"

A5-2 A8-3 | A5-2

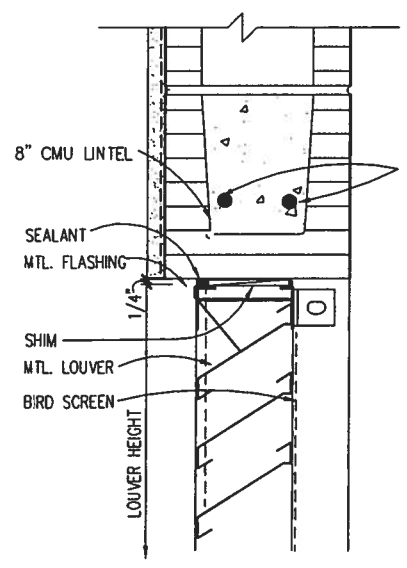

HEAD DETAIL @ ALUMN. LOUVER 6

SCALE: 3"=1'-0"

A5-2 | A5-2

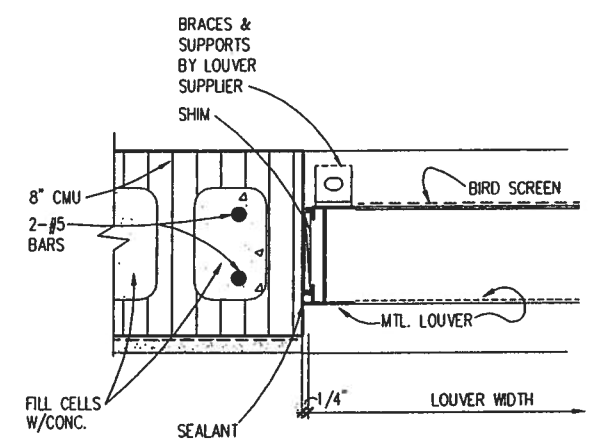

JAMB DETAIL @ ALUMN. LOUVER 7

SCALE: 3"=1'-0"

A5-2 | A5-2

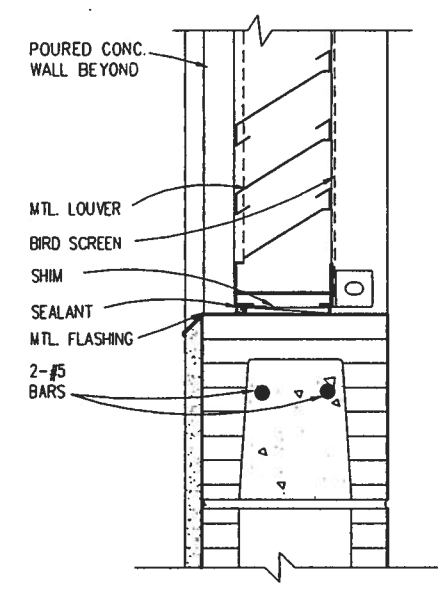

SILL DETAIL @ ALUMN. LOUVER 8

SCALE: 3"=1'-0"

A5-2 | A5-2

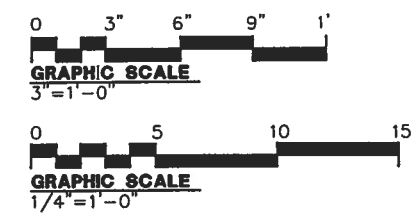

SHERLOCK, SMITH & ADAMS, INC.
ARCHITECTS – ENGINEERS
MONTGOMERY, ALABAMA

U.S. NAVAL STATION ROOSEVELT ROADS, P.R.
REPAIRS TO NAVAL HOSPITAL
LOUVER SCHEDULE AND DETAILS

CONSTR. CONTR. NO.	SPECIFICATION NO.	NAVFAC DRWG. NO.	TF NO. XXXXX
XXXXX	XXXXX	XXXXX	SHEET ? OF ??

SEAL AREA

ENG. DIV. DR: DATE: SATISFACTORY TO: DATE:

DESIGN BY: RAS DRAWN BY: FIT

REVISION DESCRIPTION DATE

NAVAL FACILITIES ENGINEERING COMMAND
DEPARTMENT OF THE NAVY
NAVY PUBLIC WORKS CENTER, JACKSONVILLE, FL
U.S. NAVAL STATION ROOSEVELT ROADS, P.R.
REPAIRS TO NAVAL HOSPITAL
LOUVER SCHEDULE AND DETAILS

PLATE NO. A5-2

DWG # XXXXX

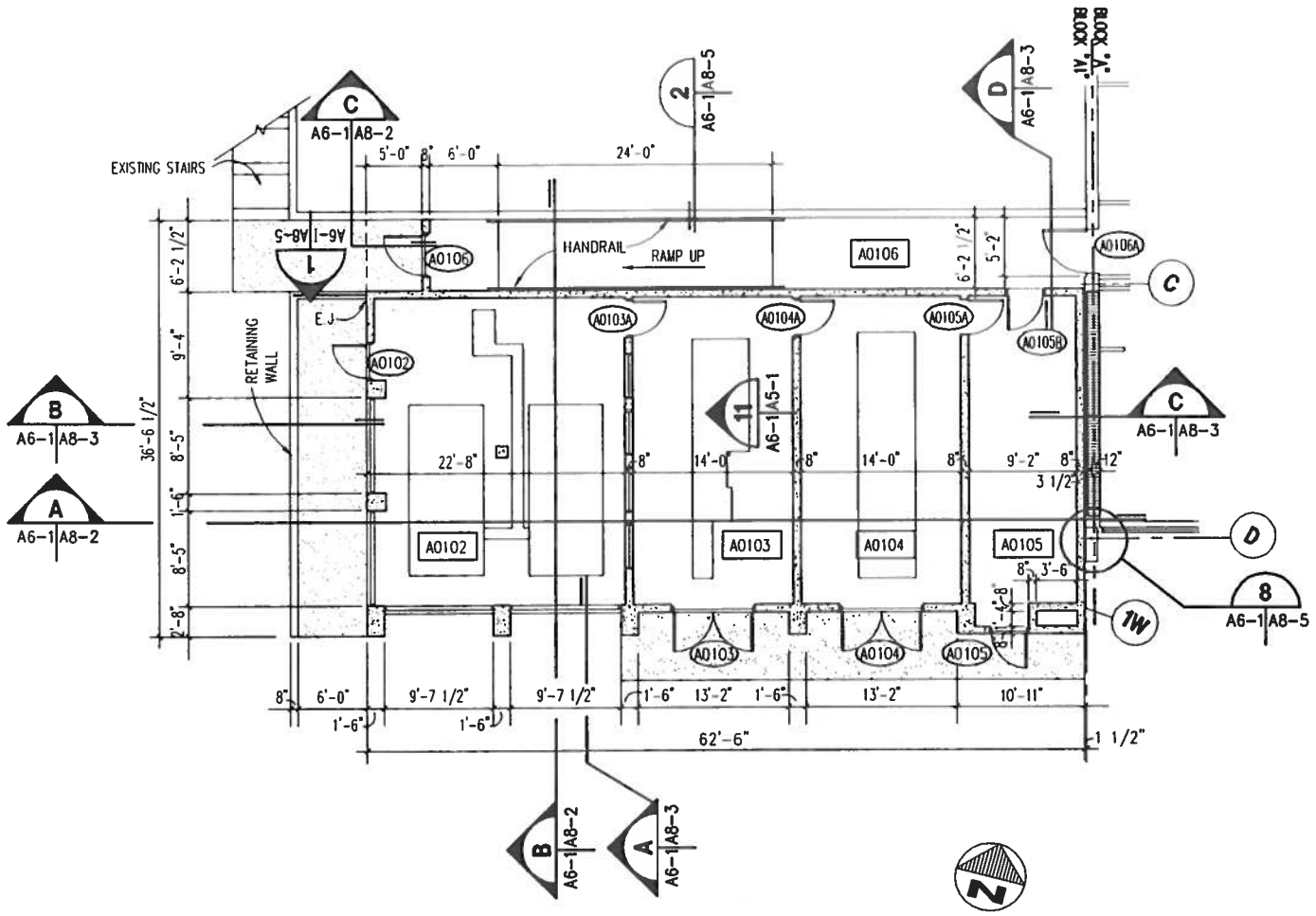

UTILITY ADDITION / GENERATOR LEVEL (LSP1 A2-1|A6-1)

SCALE: 1/8" = 1'-0"

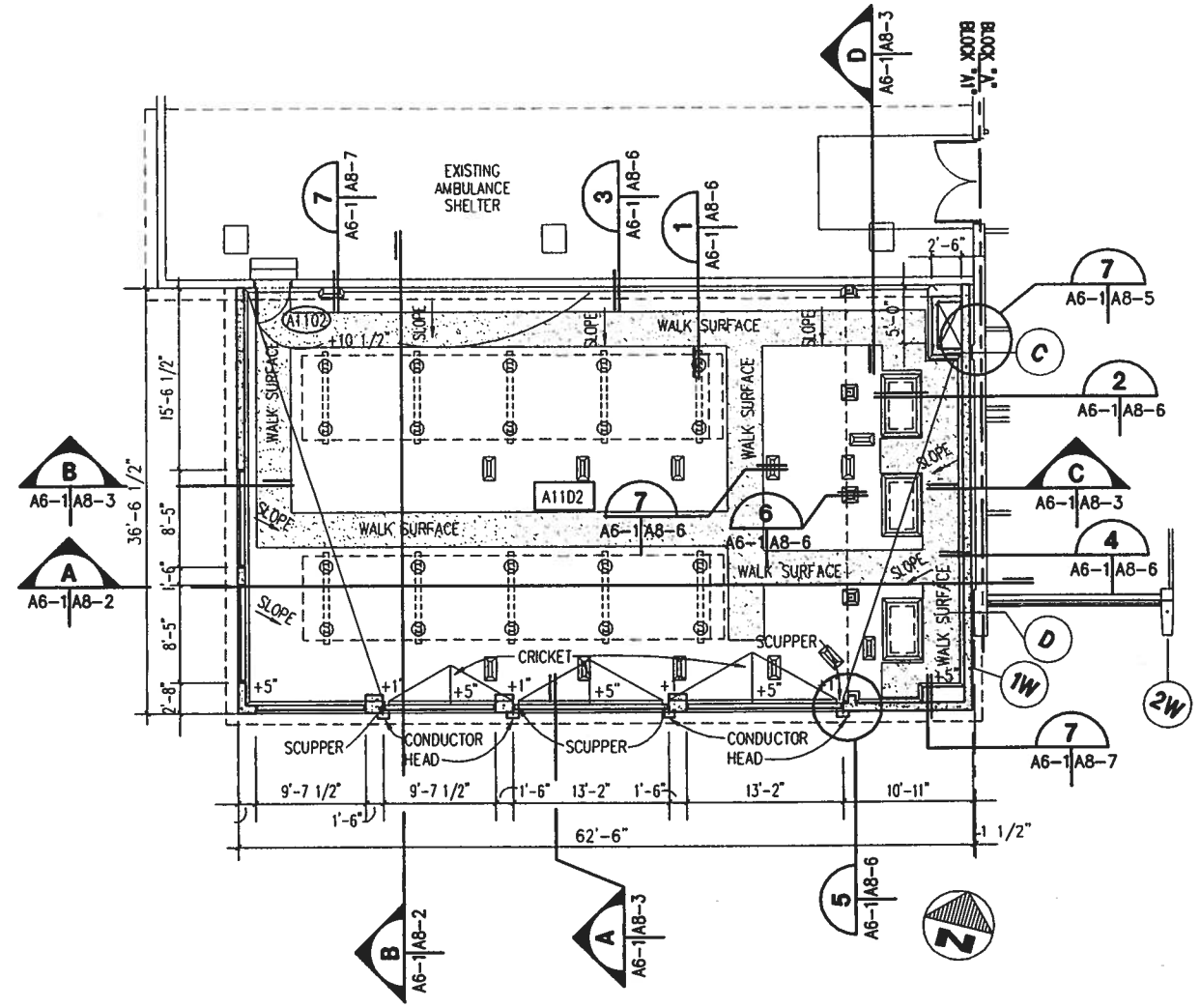

UTILITY ADDITION / MECHANICAL LEVEL (LSP2 A2-2|A6-1)

SCALE: 1/8" = 1'-0"

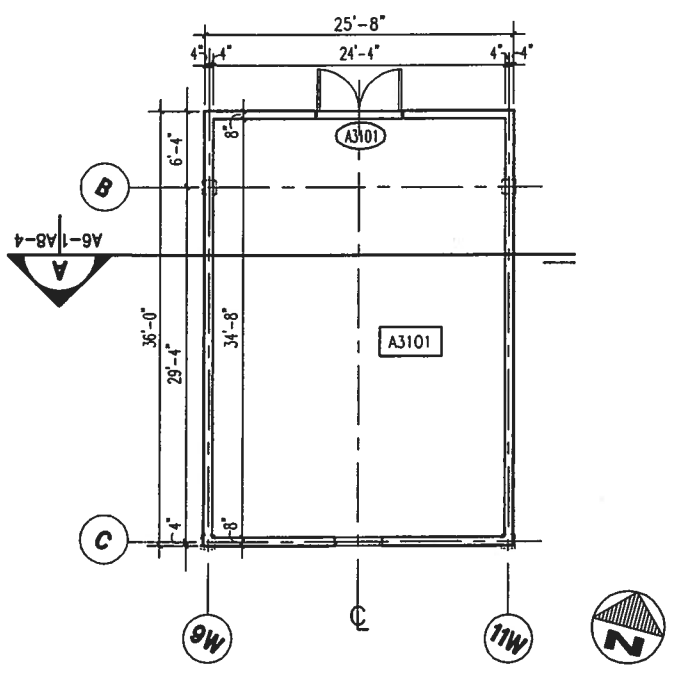

MECHANICAL PENTHOUSE PLAN (LSP3 A2-4|A6-1)

SCALE: 1/8" = 1'-0"

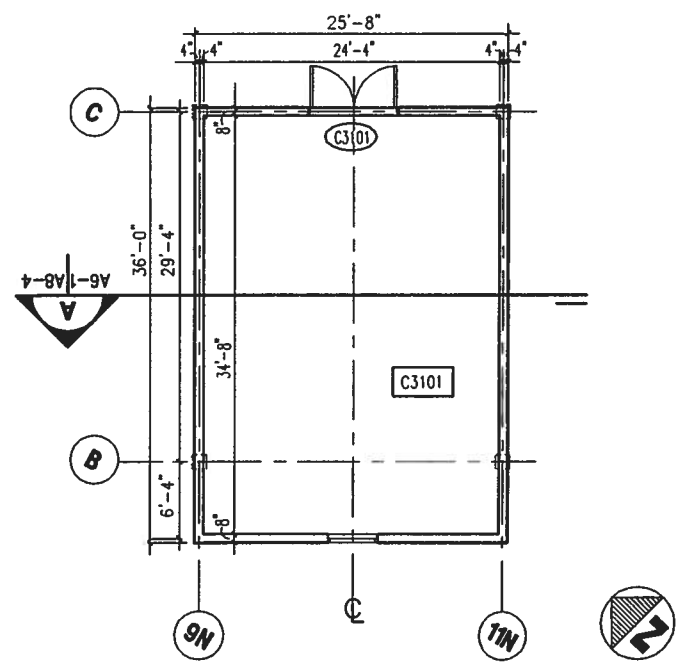

MECHANICAL PENTHOUSE PLAN (LSP4 A2-4|A6-1)

SCALE: 1/8" = 1'-0"

GRAPHIC SCALE 0 5 10 15 20
1/8"=1'-0"

SHERLOCK, SMITH & ADAMS, INC.
ARCHITECTS - ENGINEERS
MONTGOMERY, ALABAMA

U.S. NAVAL STATION ROOSEVELT ROADS, P.R.
REPAIRS TO NAVAL HOSPITAL
LARGE SCALE PLANS

CONSTR. CONTR. NO.	SPECIFICATION NO.	NAVFAC DRWG. NO.	TF NO. XXXXX
XXXXX	XXXXX	XXXXX	SHEET ? OF ??

SEAL AREA

ENG. OV. DR.: DATE: SATISFACTORY TO: DATE:

REVISION DESCRIPTION | DATE

NAVAL FACILITIES ENGINEERING COMMAND
DEPARTMENT OF THE NAVY
NAVY PUBLIC WORKS CENTER, JACKSONVILLE, FL
U.S. NAVAL STATION ROOSEVELT ROADS, P.R.
REPAIRS TO NAVAL HOSPITAL
LARGE SCALE PLANS

PLATE NO. A6-1

PWC # XXXXX

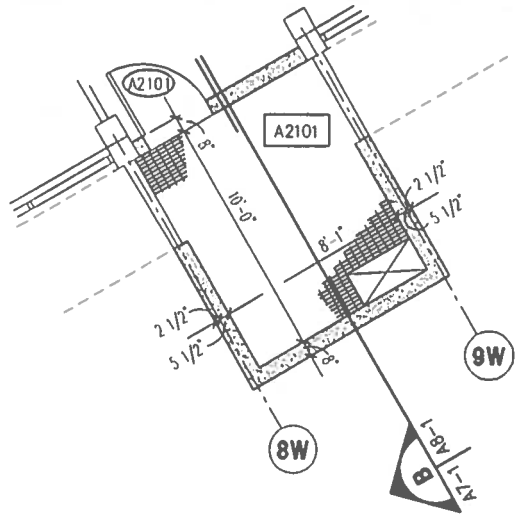

2ND FLOOR LEVEL (LSP3)
SCALE: 1/4" = 1'-0"
A2-3 | A7-1

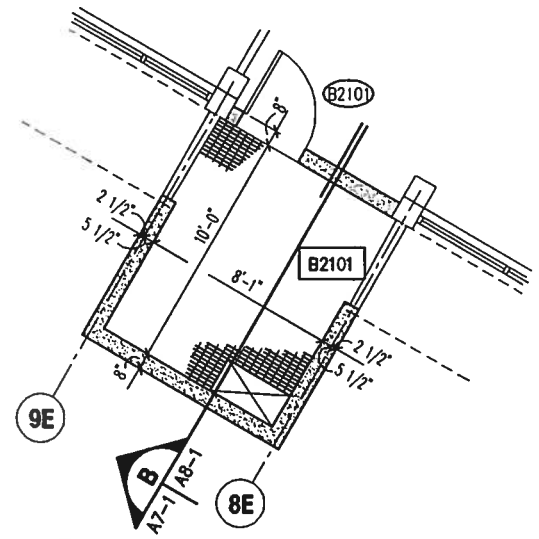

2ND FLOOR LEVEL (LSP6)
SCALE: 1/4" = 1'-0"
A2-3 | A7-1

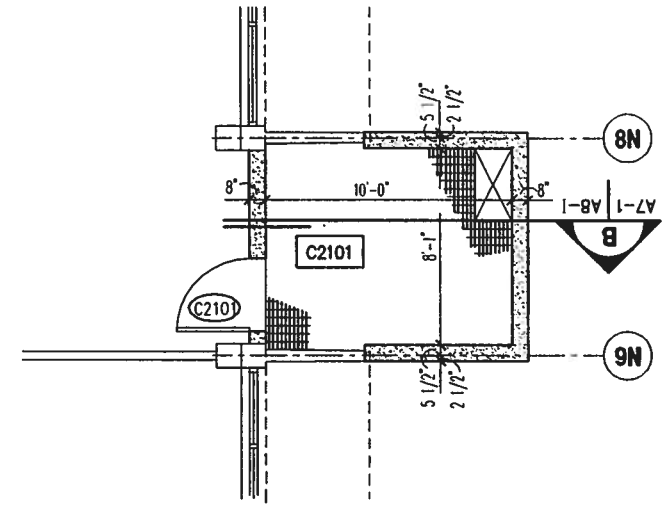

2ND FLOOR LEVEL (LSP9)
SCALE: 1/4" = 1'-0"
A2-3 | A7-1

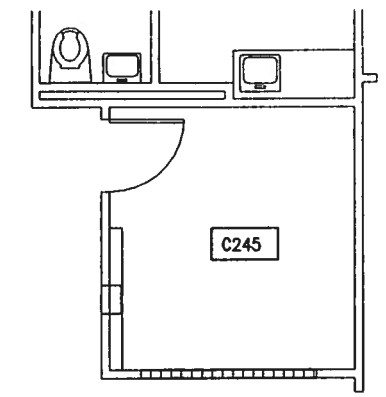

2ND FLOOR LEVEL (LSP12)
SCALE: 1/4" = 1'-0"
A2-3 | A7-1

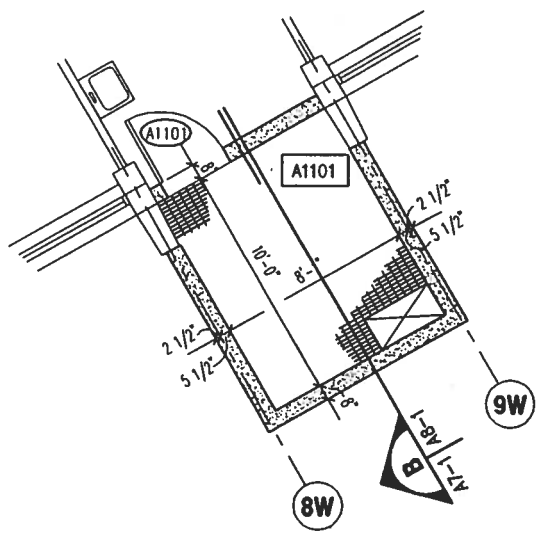

1ST FLOOR LEVEL (LSP2)
SCALE: 1/4" = 1'-0"
A2-2 | A7-1

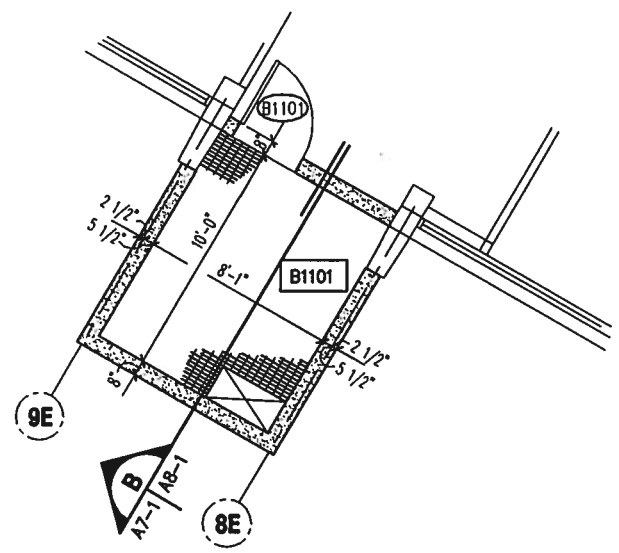

1ST FLOOR LEVEL (LSP5)
SCALE: 1/4" = 1'-0"
A2-2 | A7-1

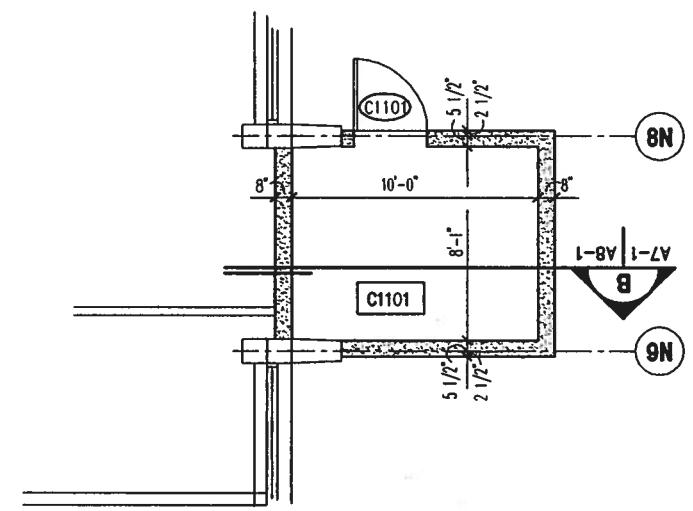

1st FLOOR LEVEL (LSP8)
SCALE: 1/4" = 1'-0"
A2-2 | A7-1

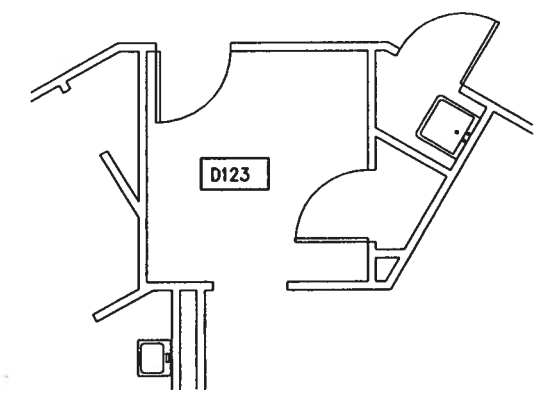

1ST FLOOR LEVEL (LSP11)
SCALE: 1/4" = 1'-0"
A2-2 | A7-1

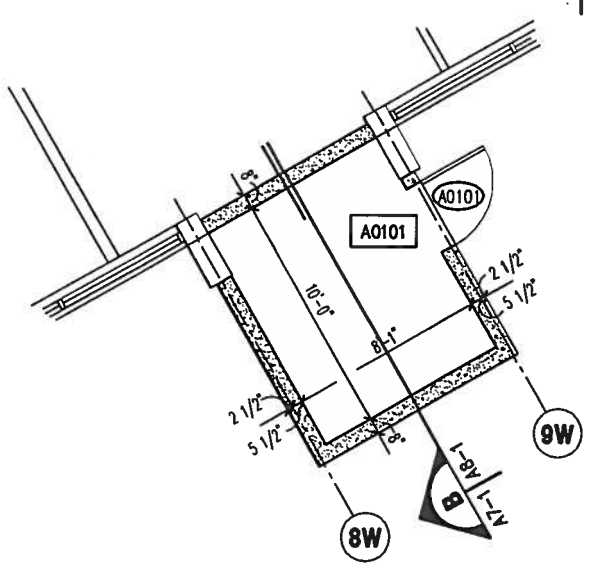

BASEMENT LEVEL (LSP1)
SCALE: 1/4" = 1'-0"
A2-1 | A7-1

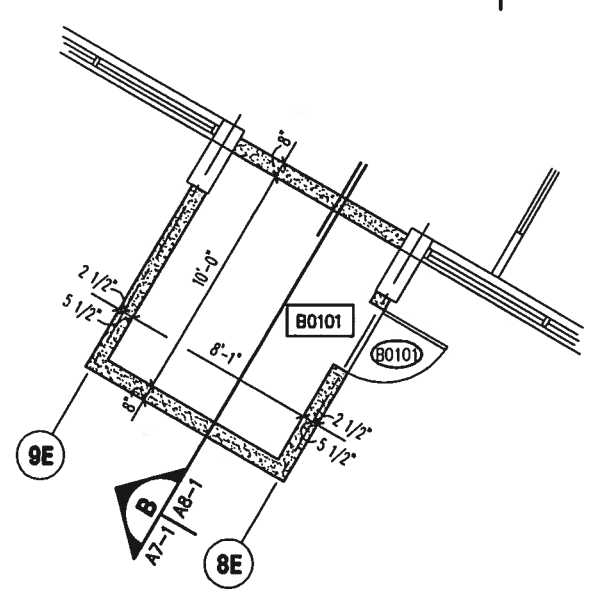

BASEMENT LEVEL (LSP4)
SCALE: 1/4" = 1'-0"
A2-1 | A7-1

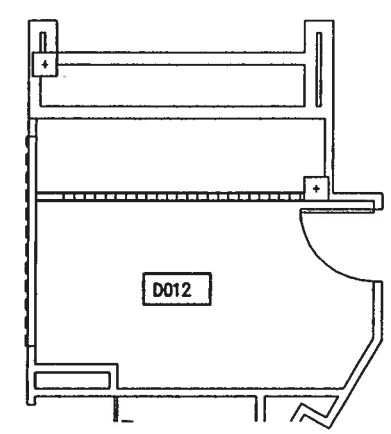

BASEMENT LEVEL (LSP7)
SCALE: 1/4" = 1'-0"
A2-1 | A7-1

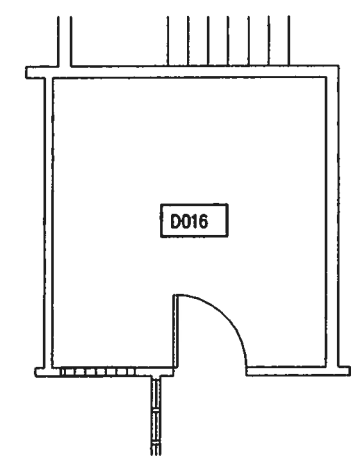

BASEMENT LEVEL (LSP10)
SCALE: 1/4" = 1'-0"
A2-1 | A7-1

0 5 10 15
GRAPHIC SCALE
1/4"=1'-0"

SHERLOCK, SMITH & ADAMS, INC.
ARCHITECTS – ENGINEERS
MONTGOMERY, ALABAMA

U.S. NAVAL STATION ROOSEVELT ROADS, P.R.
REPAIRS TO NAVAL HOSPITAL
LARGE SCALE PLANS

CONSTR. CONTR. NO.	SPECIFICATION NO.	NAVFAC DRWG. NO.	TF NO. XXXXX
XXXXX	XXXXX	XXXXX	SHEET ? OF ??

SEAL AREA

DVG. DIV. DIR.: DATE:
SATISFACTORY TO: DATE:

DATE	REVISION DESCRIPTION

NAVAL FACILITIES ENGINEERING COMMAND
DEPARTMENT OF THE NAVY
NAVY PUBLIC WORKS CENTER, JACKSONVILLE, FL
U.S. NAVAL STATION ROOSEVELT ROADS, P.R.
REPAIRS TO NAVAL HOSPITAL
LARGE SCALE PLANS

PLATE NO.
A7-1

PWC # XXXXX

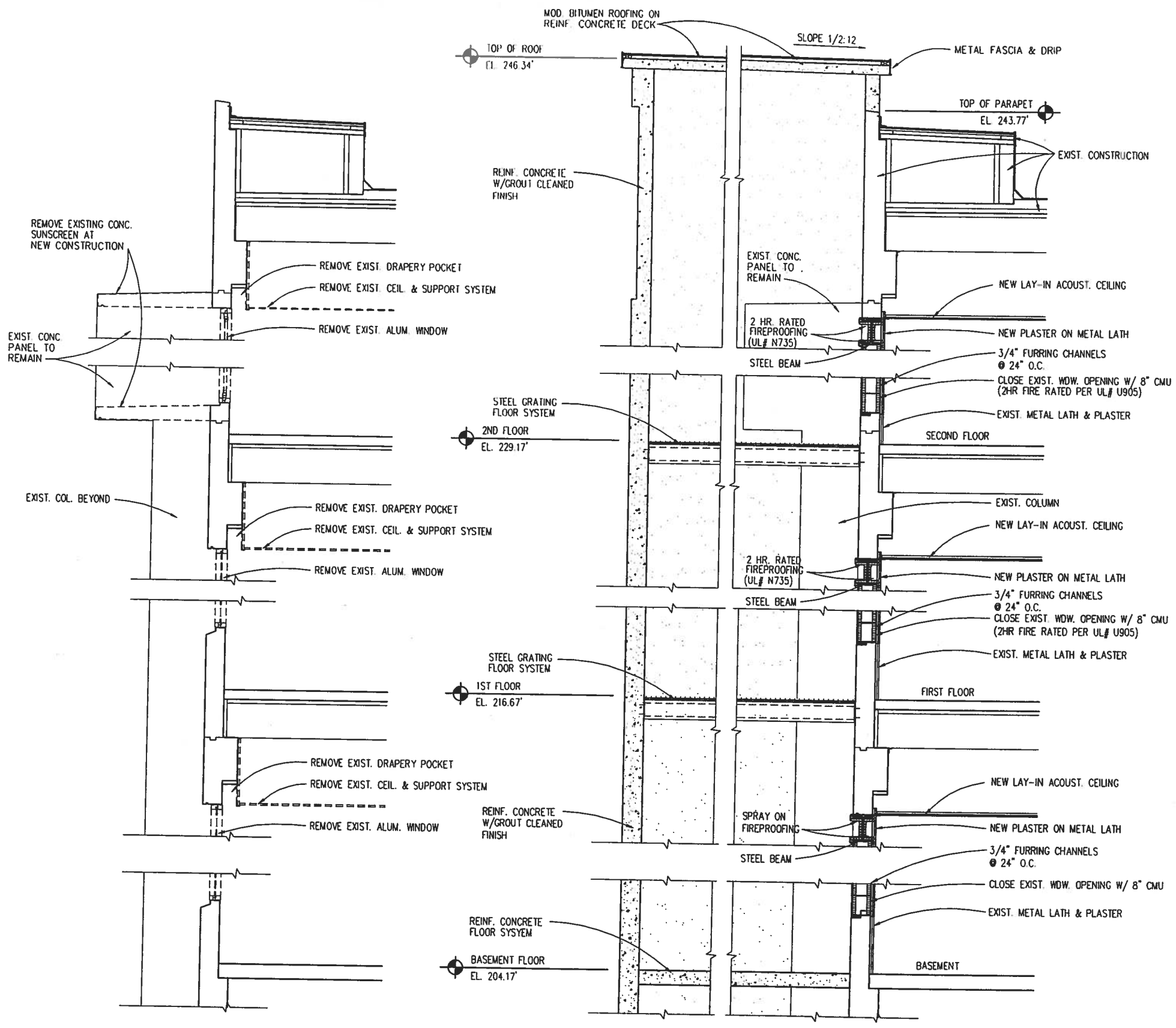

SECTION A
SCALE: 1/2" = 1'-0"
A4-1 | A8-1

SECTION B
SCALE: 1/2" = 1'-0"
A4-1 | A8-1
A7-1

0 1' 2' 3' 4' 5' 6' 7'
GRAPHIC SCALE
1/2"=1'-0"

SHERLOCK, SMITH & ADAMS, INC.
ARCHITECTS - ENGINEERS
MONTGOMERY, ALABAMA

U.S. NAVAL STATION ROOSEVELT ROADS, P.R.
REPAIRS TO NAVAL HOSPITAL
SECTIONS & DETAILS

CONSTR. CONTR. NO.	SPECIFICATION NO.	NAVFAC DRWG. NO.	TF NO. XXXXX
XXXXX	XXXXX	XXXXX	SHEET ? OF ??

SEAL AREA

ENG. DIV. DIR.: DATE: SATISFACTORY TO: DATE:

REVISION DESCRIPTION DATE

DEPARTMENT OF THE NAVY NAVAL FACILITIES ENGINEERING COMMAND
NAVY PUBLIC WORKS CENTER, JACKSONVILLE, FL
U.S. NAVAL STATION ROOSEVELT ROADS, P.R.
REPAIRS TO NAVAL HOSPITAL
SECTIONS & DETAILS

PLATE NO.
A8-1

PWC # xxxxx

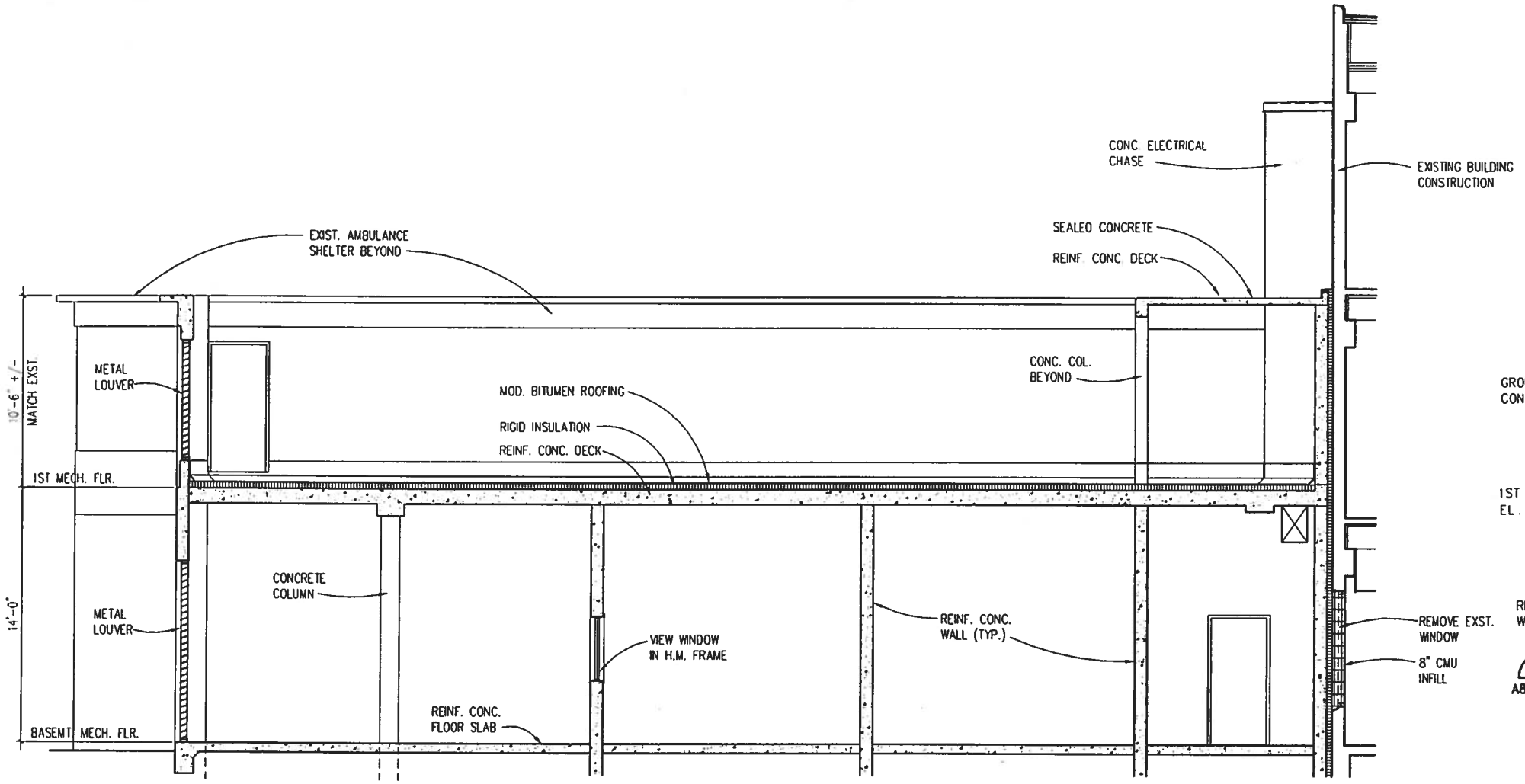

SECTION A
SCALE: 1/4" = 1'-0"
A4-2 | A8-2
A6-1

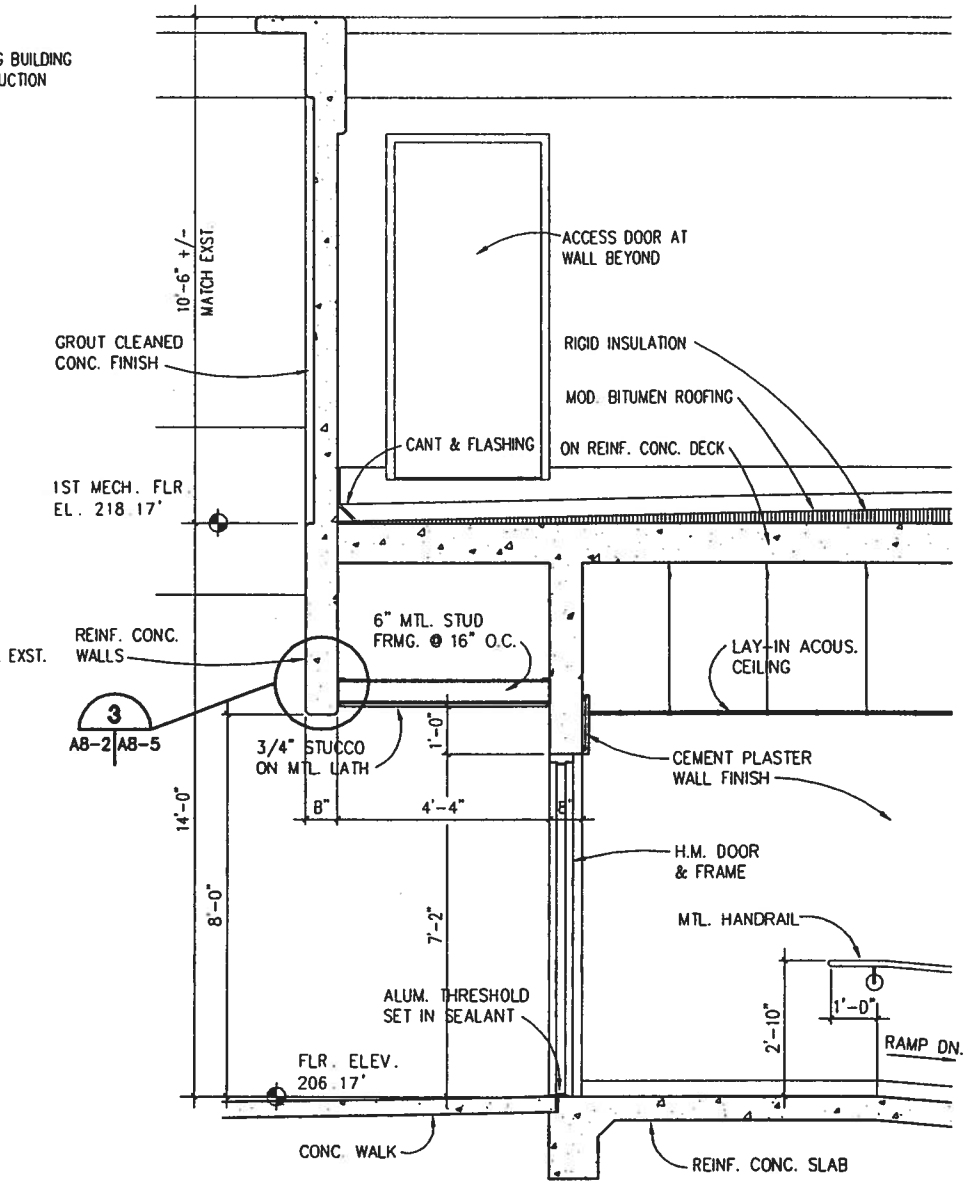

SECTION C
SCALE: 1/2" = 1'-0"
A6-1 | A8-2

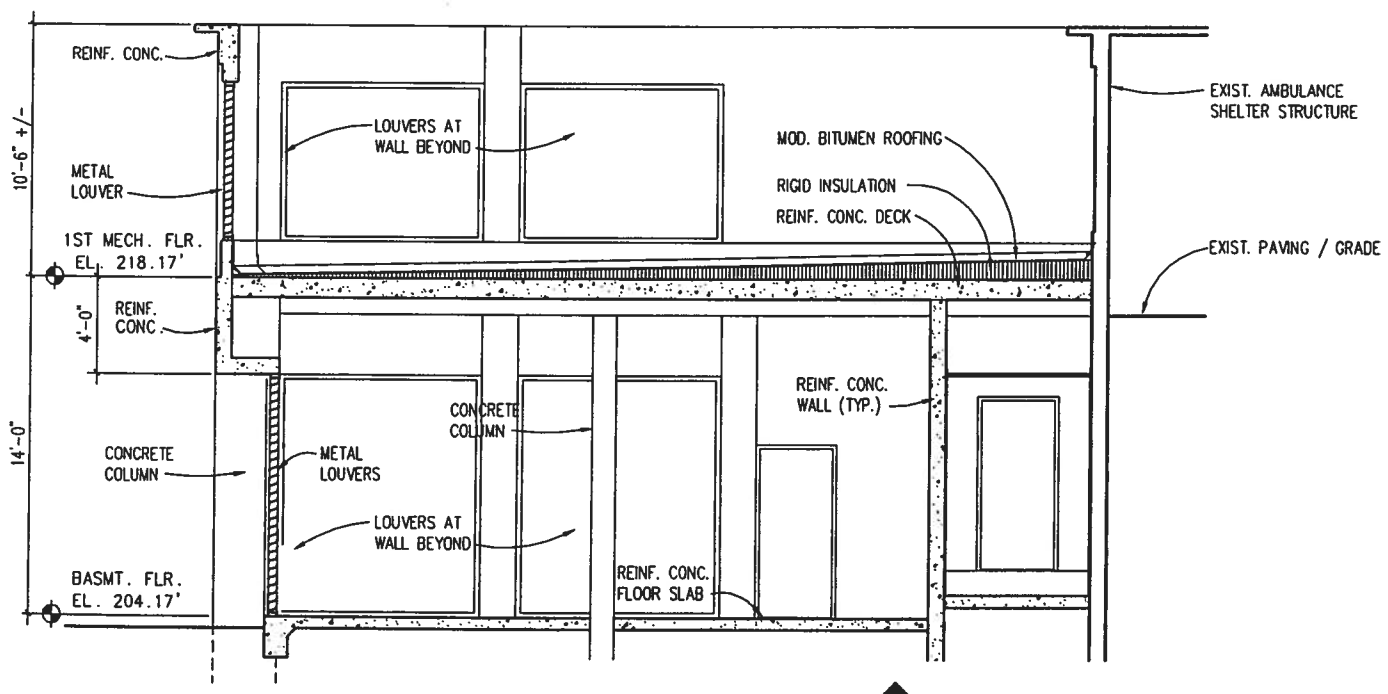

SECTION B
SCALE: 1/4" = 1'-0"
A4-2 | A8-2
A6-1

0 1' 2' 3' 4' 5' 6' 7'
GRAPHIC SCALE
1/2"=1'-0"

0 5 10 15
GRAPHIC SCALE
1/4"=1'-0"

SHERLOCK, SMITH & ADAMS, INC.
ARCHITECTS - ENGINEERS
MONTGOMERY, ALABAMA

U.S. NAVAL STATION ROOSEVELT ROADS, P.R.
REPAIRS TO NAVAL HOSPITAL
SECTIONS & DETAILS

CONSTR. CONTR. NO.	SPECIFICATION NO.	NAVFAC DRWG. NO.	TF NO. XXXXX
XXXXX	XXXXX	XXXXX	SHEET ? OF ??

SEAL AREA

ENG. DIV. DIR.: DATE:
SATISFACTORY TO: DATE:

DATE
REVISION DESCRIPTION

DEPARTMENT OF THE NAVY
NAVAL FACILITIES ENGINEERING COMMAND
NAVY PUBLIC WORKS CENTER, JACKSONVILLE, FL
U.S. NAVAL STATION ROOSEVELT ROADS, P.R.
REPAIRS TO NAVAL HOSPITAL
SECTIONS & DETAILS

PLATE NO.
A8-2

PWC # XXXXX

FINISH SCHEDULE

ROOM	ROOM NAME	FLOOR		BASE		WALLS								CEILINGS				REMARKS
						NORTH		EAST		SOUTH		WEST		MATERIAL		HGT.		
NO.		EXIST.	NEW	EXIST.	NEW	EXIST.	NEW	EXIST.	NEW	EXIST.	NEW	EXIST.	NEW	EXIST.	NEW	EXIST.	NEW	
A01	CORRIDOR	CP	—	RB	—	PVF	—	PVF	—	PVF	—	PVF	—	AT-A	NOTE #1	8'-0"	—	
A02	CORRIDOR	CP	—	RB	—	GVF	—	PVF	—	PVF	—	PVF	—	AT-A	NOTE #1	8'-0"	—	
A03	CORRIDOR	CP	—	RB	—	GVF	—	PVF	—	PVF	—	PVF	—	AT-A	NOTE #1	8'-0"	—	
A04	VESTIBULE	VT-1	—	RB	—	GVF	—	PVF	—	PVF	—	PVF	—	ASP	AT-A	8'-6"	8'-0"	
A08	C.O. OFFICE	CP	—	CT	—	PPT	—	PPT	—	PPT	—	PPT	—	ASP	—	8'-6"	—	
A08B	TOILET	CT	—	RB	—	PLG	—	PLG	—	PLG	—	PLG	—	PPT	—	8'-6"	—	
A025	OFFICE	CP	—	RB	SPM	PPT	SPT	PPT	SPT	PPT	SPT	PPT	SPT	ASP	AT-1	8'-6"	8'-6"	
A026	MED. LIBRARY	CP	—	RB	—	PPT	—	PPT	—	PPT	—	PPT	—	ASP	AT-1	8'-6"	8'-6"	
A0101	ELECTRICAL ROOM	—	CCS	—	—	—	CPT	—	CPT	—	CPT	—	CPT	—	CPT	—	13'-4"	
A0102	GENERATOR ROOM	—	CCS	—	—	—	CPT	—	CPT	—	CPT	—	CPT	—	CPT	—	13'-4"	
A0103	SWITCHGEAR ROOM	—	CCS	—	—	—	CPT	—	CPT	—	CPT	—	CPT	—	CPT	—	13'-4"	
A0104	SWITCHGEAR ROOM	—	CCS	—	—	—	CPT	—	CPT	—	CPT	—	CPT	—	CPT	—	13'-4"	
A0105	SWITCHBOARD ROOM	—	CCS	—	—	—	CPT	—	CPT	—	CPT	—	CPT	—	CPT	—	13'-4"	
A0106	CORRIDOR	—	VT-2	—	RB	—	PPT	—	PPT	—	PPT	—	PPT	—	AT-1	—	8'-0"	
B01	CORRIDOR	VT-1	—	RB	—	PPT	—	PPT	—	PPT	—	PPT	—	ACT-B	NOTE #1	8'-0"	—	
B010	KITCHEN	QT	—	QT	SPM	PLG	—	PLG	—	PLG	SPT	PLG	—	MSP	NOTE #2	8'-6"	—	
B0101	ELECTRICAL ROOM	—	CCS	—	—	—	CPT	—	CPT			—	CPT	—	CPT	—	—	
C01	CORRIDOR	VT-1	—	RB	—	PVF	—	PVF	—	PVF	—	PVF	—	AT-A	AT-1	8'-0"	8'-0"	
D01	ELEVATOR LOBBY	VT-1	—	RB	—	PVF	—	PVF	—	PVF	—	PVF	—	AT-B	NOTE #1	8'-0"	—	
D02	ELEVATOR LOBBY	VT-1	—	RB	—	PPT	—	PPT	—	PPT	—	PPT	—	PSP	AT-1	8'-0"	8'-0"	
D03	CORRIDOR	VT-1	—	RB	—	PPT	—	PPT	—	PPT	—	PPT	—	PSP	AT-1	8'-0"	8'-0"	
D04	LOBBY	VT-1	—	RB	—	PPT	—	PPT	—	PPT	—	PPT	—	PSP	AT-1	8'-0"	8'-0"	
D05	CORRIDOR	VT-1	—	RB	—	PVF	—	PVF	—	PVF	—	PVF	—	AT-B	NOTE #1	8'-0"	8'-0"	
D012	MECHANICAL ROOM	VT-1	CPT	RB	—	PPT	PPT	PPT	PPT	PPT	PPT	PPT	PPT	ASP	EXP	8'-0"	—	
D016	ELECTRICAL ROOM	CP	VT-2	RB	RB	PPT	PPT	PPT	PPT	PPT	PPT	PPT	PPT	ASP	AT-1	8'-0"	8'-0"	
A101	CORRIDOR	VT-1	—	RB	—	PVF	—	PVF	—	PVF	—	PVF	—	AT-A	NOTE #1	8'-0"	—	
A101C	SCREENING	VT-1	—	RB	—	PVF	—	PVF	—	PVF	—	PVF	—	AT-A	NOTE #1	8'-0"	—	
A102	CORRIDOR	VT-1	—	RB	—	PVF	—	PVF	—	PVF	—	PVF	—	AT-A	NOTE #1	8'-0"	—	
A104	CORRIDOR	VT-1	—	RB	—	PVF	—	PVF	—	PVF	—	PVF	—	AT-A	NOTE #1	8'-0"	—	
A105	CORRIDOR	VT-1	—	RB	—	PVF	—	PVF	—	PVF	—	PVF	—	AT-A	NOTE #1	8'-0"	—	
A119	EXAM	VT-1	—	RB	—	PPT	—	PPT	—	PPT	—	PPT	—	ASP	ACT-1	8'-0"	8'-0"	
A140	EXAM	VT-1	—	RB	—	PPT	—	PPT	SPT	PPT	—	PPT	—	ASP	ACT-1	8'-6"	8'-6"	
A1101	ELECTRICAL ROOM	—	CCS	—	RB	—	CPT	—	CPT	—	CPT	—	CPT	—	CPT	—	—	
B101	CORRIDOR	VT-1	—	RB	—	PVF	—	PVF	—	PVF	—	PVF	—	AT-A	NOTE #1	8'-0"	—	
B101A	CORRIDOR	VT-1	—	RB	—	PVF	—	PVF	—	PVF	—	PVF	—	AT-A	NOTE #1	8'-6"	—	
B102	CORRIDOR	VT-1	—	RB	—	PVF	—	PVF	—	PVF	—	PVF	—	AT-A	NOTE #1	8'-0"	—	
B102A	WAITING	VT-1	—	RB	—	PVF	—	PVF	—	PVF	—	PVF	—	AT-A	NOTE #1	8'-6"	—	
B1D2C	PATIENT HOLDING	VT-1	—	RB	—	PVF	—	PVF	—	PVF	—	PVF	—	AT-A	NOTE #1	8'-6"	—	
B102D	BARIUM	VT-1	—	RB	—	PVF	—	PVF	—	PVF	—	PVF	—	AT-A	NOTE #1	8'-0"	—	
B151	DOCTOR'S OFFICE	VT-1	—	RB	SPM	PPT	SPT	PPT	SPT	PPT	SPT	PPT	SPT	ASP	AT-1	8'-6"	8'-6"	
B152	LAB	CT	—	CT	—	PLG	—	PLG	—	PLG	—	PLG	—	PPT	AT-1	8'-0"	8'-0"	
B153	LPO OFFICE	CT	—	CT	—	PLG	—	PLG	—	PLG	—	PLG	—	PPT	AT-1	8'-0"	8'-0"	
B1101	ELECTRICAL ROOM	—	CCS	—	RB	—	CPT	—	CPT	—	CPT	—	CPT	—	CPT	—	—	
C101	CORRIDOR	VT-1	—	RB	—	PVF	—	PVF	—	PVF	—	PVF	—	AT-A	NOTE #1	8'-0"	—	

FINISH LEGEND

AT-A	ACOUSTICAL TILE CEILING (EXISTING 2X4)
AT-1	ACOUSTICAL TILE CEILING (2X2 STANDARD FINISH)
AT-2	ACOUSTICAL TILE CEILING (2X2 WATER PROOF FINISH)
ASP	ACOUSTICAL CONCEALED SPLINE CEILING
MSP	METAL CONCEALED SPLINE CEILING
PPT	PLASTER PAINTED
PSP	PLASTER SPRAYED TEXTURED FINISH
PLG	PLASTER LIQUID GLAZED COATING
GPT	GYPSUM WALL BOARD PAINTED
GLG	GYPSUM WALL BOARE LIQUID GLAZED COATING
CPT	CONCRETE PAINTED
CCS	CONCRETE WITH CONCRETE SEALER
CT	CERAMIC TILE
PVF	PLASTER WITH VINYL WALL FABRIC
GVF	GYPSUM WALL BOARD W/ VINYL WALL FABRIC
QT	QUARRY TILE
CP	CARPET
VT-1	VINYL ASBESTOS TILE
VT-2	VINYL COMPOSITION TILE
SV	SHEET VINYL
EP	EPOXY TERRAZZO
SPCF	CONDUCTIVE FLOORING
SPT	PATCH & PAINT TO MATCH EXISTING
SPM	PATCH TO MATCH EXISTING
RB	RESILIENT BASE
EXP	EXPOSED STRUCTURE

NOTE #1 REMOVE EXISTING LAY-IN ACOUSTICAL CEILING SYSTEM TO EXTENT REQUIRED TO ACCOMPLISH WORK ABOVE CEILING. (STORE MATERIALS AND RE-INSTALL EXISTING CEILING SYSTEM)

NOTE #2 REMOVE EXISTING METAL CONCEALED SPLINE CEILING TO EXTENT REQUIRED TO ACCOMPLISH WORK ABOVE CEILING. (STORE MATERIALS AND RE-INSTALL EXISTING CEILING SYSTEM)

SHERLOCK, SMITH & ADAMS, INC.
ARCHITECTS – ENGINEERS
MONTGOMERY, ALABAMA

U.S. NAVAL STATION ROOSEVELT ROADS, P.R.
REPAIRS TO NAVAL HOSPITAL
FINISH SCHEDULE

CONSTR. CONTR. NO. XXXXX | SPECIFICATION NO. XXXXX | NAVFAC DRWG. NO. XXXXX | TF NO. XXXXX | SHEET ? OF ??

REVISION DESCRIPTION | DATE | ENG. DIV. DIR. | DATE | SATISFACTORY TO: | DATE | DRAWN BY: R.L.P. | APPROVED BY: R.L.P.

DEPARTMENT OF THE NAVY
NAVAL FACILITIES ENGINEERING COMMAND
NAVY PUBLIC WORKS CENTER, JACKSONVILLE, FL
U.S. NAVAL STATION ROOSEVELT ROADS, P.R.
REPAIRS TO NAVAL HOSPITAL
FINISH SCHEDULE

PLATE NO. A3-1

PWC # XXXXX

FINISH SCHEDULE

ROOM NO.	ROOM NAME	FLOOR EXIST.	FLOOR NEW	BASE EXIST.	BASE NEW	WALLS NORTH EXIST.	WALLS NORTH NEW	WALLS EAST EXIST.	WALLS EAST NEW	WALLS SOUTH EXIST.	WALLS SOUTH NEW	WALLS WEST EXIST.	WALLS WEST NEW	CEILINGS MATERIAL EXIST.	CEILINGS MATERIAL NEW	CEILINGS HGT. EXIST.	CEILINGS HGT. NEW	REMARKS
C102	CORRIDOR	VT-1	—	RB	—	PVF	—	PVF	—	PVF	—	PVF	—	AT-A	NOTE #1	8'-0"	—	
C102A	VENDING	VT-1	—	RB	—	PVF	—	PVF	—	PVF	—	PVF	—	AT-A	NOTE #1	8'-0"	—	
C102C	INTERNAL MED. WAITING	VT-1	—	RB	—	PVF	—	PVF	—	PVF	—	PVF	—	AT-A	NOTE #1	8'-0"	—	
C103	CORRIDOR	VT-1	—	RB	—	PVF	—	PVF	—	PVF	—	PVF	—	AT-A	NOTE #1	8'-0"	—	
C105	CORRIDOR	VT-1	—	RB	—	PVF	—	PVF	—	PVF	—	PVF	—	AT-A	NOTE #1	8'-0"	—	
C161	EXAM	VT-1	—	RB	SPM	PPT	SPT	PPT	SPT	PPT	SPT	PPT	SPT	ASP	AT-1	8'-6"	8'-6"	
C162	STORAGE	CT	—	CT	—	PLG	—	PLG	—	PLG	—	PLG	—	PPT	AT-1	8'-0"	8'-0"	
C163	EXAM	VT-1	—	RB	SPM	PPT	SPT	PPT	SPT	PPT	SPT	PPT	SPT	ASP	AT-1	8'-6"	8'-6"	
C1101	ELECTRICAL ROOM	—	CCS	—	RB	—	CPT	—	CPT	—	CPT	—	CPT	—	CPT	—	—	
D101A	CORRIDOR	ET	—	ET	—	PVF	—	PVF	—	PVF	—	PVF	—	PSP	AT-1	8'-0"	8'-0"	
D102A	CORRIDOR	ET	—	ET	—	PVF	—	PVF	—	PVF	—	PVF	—	PSP	AT-1	8'-0"	8'-0"	
D102B	CORRIDOR	ET	—	ET	—	PVF	—	PVF	—	PVF	—	PVF	—	PSP	AT-1	8'-0"	8'-0"	
D103A	CORRIDOR	ET	—	ET	—	PVF	—	PVF	—	PVF	—	PVF	—	PSP	AT-1	8'-0"	8'-0"	
D103B	CORRIDOR	ET	—	ET	—	PVF	—	PVF	—	PVF	—	PVF	—	PSP	AT-1	8'-0"	8'-0"	
D104	CORRIDOR	VT-1	—	RB	—	PVF	—	PVF	—	PVF	—	PVF	—	AT-A	AT-1	8'-0"	8'-0"	
D105	CORRIDOR	VT-1	—	RB	—	PVF	—	PVF	—	PVF	—	PVF	—	PSP	AT-1	8'-0"	8'-0"	
D106	ELEVATOR LOBBY	VT-1	—	RB	—	PVF	—	PVF	—	PVF	—	PVF	—	PSP	AT-1	8'-0"	8'-0"	
D123	ELECTRICAL ROOM	CP	VT-2	RB	RB	PPT	PPT	PPT	PPT	PPT	PPT	PPT	PPT	ASP	EXP	8'-0"	—	
A201	CORRIDOR	VAT	—	RB	—	PVF	—	PVF	—	PVF	—	PVF	—	AT-A	NOTE #1	8'-0"	—	
A202	CORRIDOR	VAT	—	RB	—	PVF	—	PVF	—	PVF	—	PVF	—	AT-A	NOTE #1	8'-0"	—	
A202A	NURSES STATION	VAT	—	RB	—	PVF	—	PVF	—	PVF	—	PVF	—	AT-A	NOTE #1	8'-0"	—	
A203	CORRIDOR	SPCF	—	SPCF	—	PLG	—	PLG	—	PLG	—	PLG	—	AT-A	NOTE #1	8'-0"	—	
A205	CORRIDOR	VAT	—	RB	—	PVF	—	PVF	—	PVF	—	PVF	—	AT-A	NOTE #1	8'-0"	—	
A206	CORRIDOR	VAT	—	RB	—	PVF	—	PVF	—	PVF	—	PVF	—	AT-A	NOTE #1	8'-0"	—	
A208	1-BED ROOM	VAT	—	RB	—	PPT	—	PPT	—	PPT	—	PPT	SPT	AT-A	AT-1	8'-6"	8'-6"	
A211	LPO/GYN OFFICE	VAT	—	RB	—	PPT	—	PPT	—	PPT	SPT	PPT	—	ASP	AT-1	8'-6"	8'-6"	
A212	OFFICE/EXAM	VT-1	—	RB	—	PPT	—	PPT	—	PPT	—	PPT	SPT	ASP	AT-1	8'-6"	8'-6"	
A213	OFFICE/EXAM	VT-1	—	RB	—	PPT	—	PPT	SPT	PPT	—	PPT	SPT	ASP	AT-1	8'-6"	8'-6"	
A219	1-BED ROOM	VT-1	—	RB	—	PPT	—	PPT	—	PPT	—	PPT	SPT	ASP	AT-1	8'-6"	8'-6"	
A220	2-BED ROOM	VT-1	—	RB	—	PPT	—	PPT	—	PPT	—	PPT	SPT	ASP	AT-1	8'-6"	8'-6"	
A221	2-BED ROOM	VT-1	—	RB	—	PPT	—	PPT	SPT	PPT	—	PPT	—	ASP	AT-1	8'-6"	8'-6"	
A223	OB/GYN CLINIC WAIT.	VT-1	—	RB	—	PPT	—	PPT	SPT	PPT	—	PPT	—	ASP	AT-1	8'-6"	8'-6"	
A225	OFFICE/EXAM	VT-1	—	RB	—	PPT	—	PPT	SPT	PPT	—	PPT	SPT	ASP	AT-1	8'-6"	8'-6"	
A230	4-BED ROOM	VT-1	—	RB	—	PPT	—	PPT	SPT	PPT	—	PPT	SPT	ASP	AT-1	8'-6"	8'-6"	
A231	WORK AREA	VT-1	—	RB	—	PPT	—	PPT	—	PPT	—	PPT	—	ASP	AT-2	8'-6"	8'-6"	
A232	PASSAGE	VT-1	—	RB	—	PPT	—	PPT	—	PPT	—	PPT	—	ASP	AT-2	8'-6"	8'-6"	
A234	FORM ROOM	VT-1	—	RB	—	PPT	—	PPT	—	PPT	—	PPT	—	PPT	AT-2	8'-0"	7'-10"	
A236	FULL TERM NURSERY	VT-1	—	RB	—	PPT	—	PPT	—	PPT	—	PPT	—	ASP	AT-2	8'-0"	8'-0"	
A241	PATIENT INTERVIEW	VT-1	—	RB	—	PPT	—	PPT	—	PPT	—	PPT	—	ASP	AT-1	8'-6"	8'-6"	
A242	SHOWER	CT	—	CT	—	PLG	PLG	PLG	PLG	PLG	PLG	PLG	PLG	PPT	AT-2	8'-0"	7'-10"	* CT WALLS @ SHOWER
A243	4-BED ROOM	VT-1	—	RB	SPM	PPT	SPT	PPT	SPT	PPT	SPT	PPT	SPT	ASP	AT-1	8'-6"	8'-6"	
A244	1-BED ROOM	VT-1	—	RB	—	PPT	—	PPT	SPT	PPT	—	PPT	—	ASP	AT-1	8'-6"	8'-6"	
A246	PREMY. NURSERY	VT-1	—	RB	—	PPT	—	PPT	—	PPT	—	PPT	—	ASP	AT-2	8'-0"	8'-0"	
A247	ISOLATION	VT-1	—	RB	—	PPT	—	PPT	—	PPT	—	PPT	—	PPT	AT-2	8'-6"	8'-4"	
A248	WORK ROOM	VT-1	—	RB	—	PPT	—	PPT	—	PPT	—	PPT	—	PPT	AT-2	8'-6"	8'-4"	
A249	PASSAGE	SPCF	—	SPCF	—	PLG	—	PLG	—	PLG	—	PLG	—	ASP	AT-2	8'-6"	8'-6"	
A250	DELIVERY NO. 2	SPCF	—	SPCF	—	PLG	SPT	PLG	SPT	PLG	SPT	PLG	SPT	PPT	PPT	8'-8"	8'-8"	
A251	STORAGE	SPCF	—	SPCF	—	PLG	—	PLG	—	PLG	—	PLG	—	PLG	AT-1	8'-0"	7'-10"	

FINISH LEGEND

AT-A	ACOUSTICAL TILE CEILING (EXISTING 2X4)
AT-1	ACOUSTICAL TILE CEILING (2X2 STANDARD FINISH)
AT-2	ACOUSTICAL TILE CEILING (2X2 WATER PROOF FINISH)
ASP	ACOUSTICAL CONCEALED SPLINE CEILING
MSP	METAL CONCEALED SPLINE CEILING
PPT	PLASTER PAINTED
PSP	PLASTER SPRAYED TEXTURED FINISH
PLG	PLASTER LIQUID GLAZED COATING
GPT	GYPSUM WALL BOARD PAINTED
GLG	GYPSUM WALL BOARD LIQUID GLAZED COATING
CPT	CONCRETE PAINTED
CCS	CONCRETE WITH CONCRETE SEALER
CT	CERAMIC TILE
PVF	PLASTER WITH VINYL WALL FABRIC
GVF	GYPSUM WALL BOARD W/ VINYL WALL FABRIC
QT	QUARRY TILE
CP	CARPET
VT-1	VINYL ASBESTOS TILE
VT-2	VINYL COMPOSITION TILE
SV	SHEET VINYL
EP	EPOXY TERRAZZO
SPCF	CONDUCTIVE FLOORING
SPT	PATCH & PAINT TO MATCH EXISTING
SPM	PATCH TO MATCH EXISTING
RB	RESILIENT BASE
EXP	EXPOSED STRUCTURE

NOTE #1 REMOVE EXISTING LAY-IN ACOUSTICAL CEILING SYSTEM TO EXTENT REQUIRED TO ACCOMPLISH WORK ABOVE CEILING. (STORE MATERIALS AND RE-INSTALL EXISTING CEILING SYSTEM)

NOTE #2 REMOVE EXISTING METAL CONCEALED SPLINE CEILING TO EXTENT REQUIRED TO ACCOMPLISH WORK ABOVE CEILING. (STORE MATERIALS AND RE-INSTALL EXISTING CEILING SYSTEM)

SHERLOCK, SMITH & ADAMS, INC.
ARCHITECTS – ENGINEERS
MONTGOMERY, ALABAMA

U.S. NAVAL STATION ROOSEVELT ROADS, P.R.
REPAIRS TO NAVAL HOSPITAL
FINISH SCHEDULE

CONSTR. CONTR. NO. XXXXX | SPECIFICATION NO. XXXXX | NAVFAC DRWG. NO. XXXXX | TF NO. XXXXX | SHEET ? OF ??

PLATE NO. A3-2

DEPARTMENT OF THE NAVY
NAVAL FACILITIES ENGINEERING COMMAND
NAVY PUBLIC WORKS CENTER, JACKSONVILLE, FL
U.S. NAVAL STATION ROOSEVELT ROADS, P.R.
REPAIRS TO NAVAL HOSPITAL
FINISH SCHEDULE

REVISION DESCRIPTION | DATE | DWG. DR.: | DATE | SATISFACTORY TO: | DATE:

PWC # XXXXX

FINISH SCHEDULE

ROOM NO.	ROOM NAME	FLOOR		BASE		WALLS								CEILINGS				REMARKS
						NORTH		EAST		SOUTH		WEST		MATERIAL		HGT.		
		EXIST.	NEW	EXIST.	NEW	EXIST.	NEW	EXIST.	NEW	EXIST.	NEW	EXIST.	NEW	EXIST.	NEW	EXIST.	NEW	
A253	RECOVERY	SPCF	—	SPCF	—	PLG	—	PLG	—	PLG	—	PLG	—	PLG	AT-1	8'-0"	7'-10"	
A254	STORAGE	VT-1	—	RB	—	PPT	—	PPT	—	PPT	—	PPT	—	PLG	AT-1	8'-0"	7'-10"	
A255	STAFF LOUNGE	VT-1	—	RB	—	PPT	—	PPT	SPT	PPT	—	PPT	SPT	ASP	AT-1	8'-6"	8'-6"	
A256	ASSIST. DIR. NURSING	VT-1	—	RB	—	PPT	—	PPT	SPT	PPT	—	PPT	—	ASP	AT-1	8'-6"	8'-6"	
A2101	ELECTRICAL ROOM	—	CCS	—	RB	—	CPT	—	CPT	—	CPT	—	CPT	—	CPT	—	—	
B201	CORRIDOR	VT-1	—	RB	—	PVF	—	PVF	—	PVF	—	PVF	—	AT-A	NOTE #1	8'-0"	—	
B202	CORRIDOR	VT-1	—	RB	—	PVF	—	PVF	—	PVF	—	PVF	—	AT-A	NOTE #1	8'-0"	—	
B203	CORRIDOR	CP	—	RB	—	PVF	—	PVF	—	PVF	—	PVF	—	AT-A	NOTE #1	8'-0"	—	
B203A	CORRIDOR	VT-1	—	RB	—	PVF	—	PVF	—	PVF	—	PVF	—	AT-A	NOTE #1	8'-0"	—	
B203B	ADMIN. OFFICES	CP	—	RB	—	PVF	—	PVF	—	PVF	—	PVF	—	ASP	AT-1	8'-6"	8'-6"	
B204	2-BED ROOM	VT-1	—	RB	—	PPT	SPT	PPT	—	PPT	—	PPT	—	ASP	AT-1	8'-6"	8'-6"	
B206	DOCTOR'S OFFICE	VT-1	—	RB	—	PPT	—	PPT	—	PPT	—	PPT	SPT	ASP	AT-1	8'-6"	8'-6"	
B207	MENTAL HEALTH CLINIC	VT-1	—	RB	—	PPT	—	PPT	SPT	PPT	—	PPT	SPT	ASP	AT-1	8'-6"	8'-6"	
B209A	CORRIDOR	VT-1	—	RB	—	PVF	—	PVF	—	PVF	—	PVF	—	AT-A	NOTE #1	8'-0"	—	
B212	4-BED ROOM	VT-1	—	RB	—	PPT	—	PPT	SPT	PPT	—	PPT	SPT	ASP	AT-1	8'-6"	8'-6"	
B213	2-BED ROOM	VT-1	—	RB	—	PPT	—	PPT	—	PPT	—	PPT	SPT	ASP	AT-1	8'-6"	8'-6"	
B215	WAITING ROOM	VT-1	—	RB	—	PPT	—	PPT	—	PPT	—	PPT	SPT	ASP	AT-1	8'-6"	8'-6"	
B216	FAMILY ADV. OFFICE	VT-1	—	RB	—	PPT	—	PPT	SPT	PPT	—	PPT	—	ASP	AT-1	8'-6"	8'-6"	
B219	2-BED ROOM	VT-1	—	RB	—	PPT	—	PPT	SPT	PPT	—	PPT	—	ASP	AT-1	8'-6"	8'-6"	
B220	4-BED ROOM	VT-1	—	RB	—	PPT	—	PPT	SPT	PPT	—	PPT	SPT	ASP	AT-1	8'-6"	8'-6"	
B224	SHOWER	CT	—	CT	—	PLG	—	PLG	—	PLG	—	PLG	—	PPT	AT-2	8'-0"	7'-10"	
B225	DOCTOR'S OFFICE	VT-1	—	RB	SPM	PPT	—	PPT	—	PPT	SPT	PPT	SPT	ASP	AT-1	8'-6"	8'-6"	
B226	DOCTOR'S OFFICE	VT-1	—	RB	—	PPT	—	PPT	SPT	PPT	—	PPT	SPT	ASP	AT-1	8'-6"	8'-6"	
B229	2-BED ROOM	VT-1	—	RB	—	PPT	—	PPT	SPT	PPT	—	PPT	—	ASP	AT-1	8'-6"	8'-6"	
B230	CHAMPUS	CP	—	RB	—	PPT	—	PPT	SPT	PPT	—	PPT	—	ASP	AT-1	8'-6"	8'-6"	
B236	PAT ADMIN. TRANSC.	CP	—	RB	—	PPT	—	PPT	SPT	PPT	—	PPT	SPT	ASP	AT-1	8'-6"	8'-6"	
B237	PAT. ADMIN. ARCHIVES	CP	—	RB	—	PPT	—	PPT	SPT	PPT	—	PPT	SPT	ASP	AT-1	8'-6"	8'-6"	
B242	OVERSEAS SCREENING	CP	—	RB	—	PPT	—	PPT	SPT	PPT	—	PPT	—	ASP	AT-1	8'-6"	8'-6"	
B243	ADMISSION OFFICE	CP	—	RB	—	PPT	—	PPT	—	PPT	—	PPT	SPT	ASP	AT-1	8'-6"	8'-6"	
B2101	ELECTRICAL ROOM	—	CP	—	RB	—	CPT	—	CPT	—	CPT	—	CPT	—	CPT	—	—	
C201	CORRIDOR	VT-1	—	RB	—	PVF	—	PVF	—	PVF	—	PVF	—	AT-A	NOTE #1	8'-0"	—	
C202	CORRIDOR	VT-1	—	RB	—	PLG	—	PLG	—	PLG	—	PLG	—	AT-A	NOTE #1	8'-0"	8'-0"	
C203	CORRIDOR	SPCF	—	SPCF	—	PLG	—	PLG	—	PLG	—	PLG	—	AT-A	NOTE #1	8'-0"	8'-0"	
C203A	SCRUB	SPCF	—	SPCF	—	PLG	—	PLG	—	PLG	—	PLG	—	AT-A	NOTE #1	8'-0"	8'-0"	
C204	CORRIDOR	VT-1	—	RB	—	PPT	—	PPT	—	PPT	—	PPT	—	ASP	AT-1	8'-6"	8'-6"	
C208	OPERATING ROOM	SPCF	—	SPCF	—	PLG	SPT	PLG	SPT	PLG	SPT	PLG	SPT	PPT	GLG	8'-8"	8'-8"	
C209	SURGICAL STORAGE	SPCF	—	SPCF	—	PLG	—	PLG	—	PLG	—	PLG	—	PPT	AT-2	8'-0"	7'-10"	
C210	SPLINT/PLASTER	SPCF	—	SPCF	—	PLG	—	PLG	—	PLG	—	PLG	—	PPT	AT-2	8'-0"	7'-10"	
C211	STORAGE	VT-1	—	RB	—	PLG	—	PLG	—	PLG	—	PLG	—	ASP	AT-2	8'-0"	7'-10"	
C221	ANESTH. TECH. WORK	SPCF	—	SPCF	—	PLG	—	PLG	—	PLG	—	PLG	—	AT-A	NOTE #1	8'-0"	—	
C222	OPERATING ROOM	SPCF	—	SPCF	—	PLG	SPT	PLG	SPT	PLG	SPT	PLG	SPT	PPT	GLG	8'-8"	8'-8"	
C223	SUB-STERILE	SPCF	—	SPCF	—	PPT	—	PPT	—	PPT	—	PPT	—	PLG	AT-2	8'-6"	8'-4"	
C224	OPERATING ROOM	SPCF	—	SPCF	—	PLG	SPT	PLG	SPT	PLG	SPT	PLG	SPT	PPT	GLG	8'-8"	8'-8"	
C225	GAS STORAGE	SPCF	—	SPCF	—	PLG	—	PLG	—	PLG	—	PLG	—	AT-A	NOTE #1	8'-0"	—	
C226	ORTHO. SUPPLY	VT-1	—	RB	—	PVF	—	PVF	—	PVF	—	PVF	—	ASP	AT-1	8'-0"	8'-0"	
C227	ORTHO SUPPLY	VT-1	—	RB	—	PVF	—	PVF	—	PVF	—	PVF	—	ASP	AT-1	8'-0"	8'-0"	
C230	GNW STORAGE	VT-1	—	RB	—	PPT	—	PPT	—	PPT	SPT	PPT	—	ASP	AT-1	8'-6"	8'-6"	
C231	OFFICE	VT-1	—	RB	SPM	PPT	SPT	PPT	—	PPT	—	PPT	SPT	ASP	AT-1	8'-6"	8'-6"	

FINISH LEGEND

AT-A	ACOUSTICAL TILE CEILING (EXISTING 2X4)
AT-1	ACOUSTICAL TILE CEILING (2X2 STANDARD FINISH)
AT-2	ACOUSTICAL TILE CEILING (2X2 WATER PROOF FINISH)
ASP	ACOUSTICAL CONCEALED SPLINE CEILING
MSP	METAL CONCEALED SPLINE CEILING
PPT	PLASTER PAINTED
PSP	PLASTER SPRAYED TEXTURED FINISH
PLG	PLASTER LIQUID GLAZED COATING
GPT	GYPSUM WALL BOARD PAINTED
GLG	GYPSUM WALL BOARD LIQUID GLAZED COATING
CPT	CONCRETE PAINTED
CCS	CONCRETE WITH CONCRETE SEALER
CT	CERAMIC TILE
PVF	PLASTER WITH VINYL WALL FABRIC
GVF	GYPSUM WALL BOARD W/ VINYL WALL FABRIC
QT	QUARRY TILE
CP	CARPET
VT-1	VINYL ASBESTOS TILE
VT-2	VINYL COMPOSITION TILE
SV	SHEET VINYL
EP	EPOXY TERRAZZO
SPCF	CONDUCTIVE FLOORING
SPT	PATCH & PAINT TO MATCH EXISTING
SPM	PATCH TO MATCH EXISTING
RB	RESILIENT BASE
EXP	EXPOSED STRUCTURE

NOTE #1 REMOVE EXISTING LAY-IN ACOUSTICAL CEILING SYSTEM TO EXTENT REQUIRED TO ACCOMPLISH WORK ABOVE CEILING. (STORE MATERIALS AND RE-INSTALL EXISTING CEILING SYSTEM)

NOTE #2 REMOVE EXISTING METAL CONCEALED SPLINE CEILING TO EXTENT REQUIRED TO ACCOMPLISH WORK ABOVE CEILING. (STORE MATERIALS AND RE-INSTALL EXISTING CEILING SYSTEM)

SHERLOCK, SMITH & ADAMS, INC.
ARCHITECTS – ENGINEERS
MONTGOMERY, ALABAMA

U.S. NAVAL STATION ROOSEVELT ROADS, P.R.
REPAIRS TO NAVAL HOSPITAL
FINISH SCHEDULE

CONSTR. CONTR. NO. XXXXX | SPECIFICATION NO. XXXXX | NAVFAC DRWG. NO. XXXXX | TF NO. XXXXX | SHEET ? OF ??

DEPARTMENT OF THE NAVY
NAVAL FACILITIES ENGINEERING COMMAND
NAVY PUBLIC WORKS CENTER, JACKSONVILLE, FL
U.S. NAVAL STATION ROOSEVELT ROADS, P.R.
REPAIRS TO NAVAL HOSPITAL
FINISH SCHEDULE

REVISION DESCRIPTION | DATE | DWG. DIV. DIR.: | DATE | SATISFACTORY TO: | DATE

PLATE NO. A3-3

PWC # xxxxx