FINISH SCHEDULE

ROOM NO.	ROOM NAME	FLOOR EXIST.	FLOOR NEW	BASE EXIST.	BASE NEW	WALLS NORTH EXIST.	WALLS NORTH NEW	WALLS EAST EXIST.	WALLS EAST NEW	WALLS SOUTH EXIST.	WALLS SOUTH NEW	WALLS WEST EXIST.	WALLS WEST NEW	CEILINGS MATERIAL EXIST.	CEILINGS MATERIAL NEW	CEILINGS HGT. EXIST.	CEILINGS HGT. NEW	REMARKS
C231A	TOILET	CT	—	CT	—	PLG	—	PLG	—	PLG	—	PLG	—	PPT	AT-1	8'-0"	7'-10"	
C233	RECOVERY ROOM / SCU	VT-1	—	RB	—	PPT	—	PPT	—	PPT	—	PPT	—	ASP	AT-1	*	*	* VARIES SEE REFLECTED PLAN SHEET A9-3
C235	UNIT OFFICE	VT-1	—	RB	—	PPT	—	PPT	—	PPT	—	PPT	—	ASP	AT-1	8'-6"	8'-6"	
C236	OFFICE	VT-1	—	RB	—	PPT	SPT	PPT	—	PPT	SPT	PPT	—	ASP	AT-1	8'-6"	8'-6"	
C238	QUIET OFFICE	VT-1	—	RB	—	PPT	—	PPT	—	PPT	—	PPT	—	ASP	AT-1	8'-6"	8'-6"	
C239	TOILET	CT	—	CT	—	PLG	—	PLG	—	PLG	—	PLG	—	PPT	AT-2	8'-0"	7'-10"	
C240	STORAGE	VT-1	—	RB	—	PPT	—	PPT	—	PPT	—	PPT	—	PPT	AT-1	8'-6"	8'-4"	
C241	4-BED ROOM	VT-1	—	RB	—	PPT	SPT	PPT	—	PPT	SPT	PPT	—	ASP	AT-1	8'-6"	8'-6"	
C243	SOILED	VT-1	—	RB	—	PLG	—	PLG	—	PLG	—	PLG	—	PPT	AT-1	8'-0"	7'-10"	
C244	TOILET	CT	—	CT	—	PLG	—	PLG	—	PLG	—	PLG	—	PPT	AT-1	8'-0"	7'-10"	
C245	ELECTRICAL ROOM	VT-1	—	RB	—	PVF	—	PVF	—	PVF	—	PVF	—	ASP	AT-1	8'-0"	8'-0"	
C246	1-BED ROOM	VT-1	—	RB	—	PPT	SPT	PPT	—	PPT	—	PPT	—	ASP	AT-1	8'-6"	8'-6"	
C2101	ELECTRICAL ROOM	—	CCS	—	RB	—	CPT	—	CPT	—	CPT	—	CPT	—	CPT	—	—	
D201	ELEVATOR LOBBY	VT-1	—	RB	—	PVF	—	PVF	—	PVF	—	PVF	—	ACT-C	NOTE #1	8'-0"	8'-0"	
D201A	OFFICE	VT-1	—	RB	—	PPT	—	PPT	—	PPT	—	PPT	—	AT-A	AT-1	8'-0"	8'-0"	
D202	CORRIDOR	VT-1	—	RB	—	PVF	—	PVF	—	PVF	—	PVF	—	ACT-C	NOTE #1	8'-0"	—	
D203	CORRIDOR	VT-1	—	RB	—	PVF	—	PVF	—	PVF	—	PVF	—	ACT-C	NOTE #1	8'-0"	—	
D204	CORRIDOR	VT-1	—	RB	—	PVF	—	PVF	—	PVF	—	PVF	—	ACT-C	NOTE #1	8'-0"	—	
D205	CORRIDOR	VT-1	—	RB	—	PVF	—	PVF	—	PVF	—	PVF	—	ACT-C	NOTE #1	8'-0"	—	
D206	CORRIDOR	VT-1	—	RB	—	PVF	—	PVF	—	PVF	—	PVF	—	ACT-C	NOTE #1	8'-0"	—	
D209	LOCKERS	VT-1	—	RB	—	PPT	—	PPT	—	PPT	—	PPT	—	PPT	AT-1	8'-6"	—	
D210	TOILET	CT	—	CT	—	PLG	—	PLG	—	PLG	—	PLG	—	PPT	AT-2	8'-0"	7'-10"	
D211	STORAGE	VT-1	—	RB	—	PPT	—	PPT	—	PPT	—	PPT	—	ASP	AT-1	8'-6"	8'-6"	
D212	TOILET	CT	—	CT	—	PLG	—	PLG	—	PLG	—	PLG	—	PPT	AT-2	8'-0"	7'-10"	
D213	LOCKERS	VT-1	—	RB	—	PPT	—	PPT	—	PPT	—	PPT	—	PPT	AT-2	8'-0"	7'-10"	
D214	CLEAN UTILITY	CT	—	CT	—	PLG	—	PLG	—	PLG	—	PLG	—	PPT	AT-2	8'-0"	7'-10"	
D215	STORAGE	SPCF	—	SPCF	—	PLG	—	PLG	—	PLG	—	PLG	—	PPT	AT-1	8'-0"	7'-10"	
D216	DELIVERY ROOM NO.1	SPCF	—	SPCF	—	PLG	SPT	PLG	SPT	PLG	SPT	PLG	SPT	PPT	GLC	8'-8"	8'-8"	
D218	LABOR ROOM NO.1	VT-1	—	RB	—	PPT	—	PPT	—	PPT	—	PPT	—	PPT	AT-2	8'-0"	7'-10"	
D219	EXAM	VT-1	—	RB	—	PPT	—	PPT	—	PPT	—	PPT	—	PPT	AT-2	8'-0"	7'-10"	
D220	NURSE	VT-1	—	RB	—	PPT	—	PPT	—	PPT	—	PPT	—	AT-A	NOTE #1	8'-0"	—	
D221	LABOR ROOM NO.2	CT	—	CT	—	PLG	—	PLG	—	PLG	—	PLG	—	PPT	AT-2	8'-0"	7'-10"	
D222	R.P. OFFICE	VT-1	—	RB	—	PPT	—	PPT	—	PPT	—	PPT	SPT	ASP	AT-1	8'-6"	8'-6"	
D223	CHAPLIN'S OFFICE	VT-1	—	RB	—	PPT	—	PPT	SPT	PPT	—	PPT	—	ASP	AT-1	8'-6"	8'-6"	
D226	STORAGE	CT	—	CT	—	PLG	—	PLG	—	PLG	—	PLG	—	PPT	AT-1	8'-0"	7'-10"	
D227	PROSTH. LAB	VT-1	—	RB	—	PPT	—	PPT	—	PPT	—	PPT	—	PPT	AT-2	8'-0"	7'-10"	
D228	SCRUB	VT-1	—	RB	—	PPT	—	PPT	—	PPT	—	PPT	—	PPT	AT-1	8'-0"	7'-10"	
D229	DENTAL O.R. NO.2	VT-1	—	RB	—	PPT	—	PPT	—	PPT	—	PPT	—	ASP	AT-2	8'-0"	8'-0"	
D230	DENTAL O.R. NO.1	VT-1	—	RB	—	PPT	—	PPT	—	PPT	—	PPT	—	ASP	AT-2	8'-0"	8'-0"	
D236	1-BED ROOM	VT-1	—	RB	—	PPT	SPT	PPT	—	PPT	—	PPT	—	ASP	AT-1	8'-6"	8'-6"	
D240	4-BED ROOM	VT-1	—	RB	—	PPT	SPT	PPT	—	PPT	SPT	PPT	—	ASP	AT-1	8'-6"	8'-6"	
D245	ELECTRICAL ROOM	VT-1	—	RB	—	PPT	—	PPT	—	PPT	—	PPT	—	AT-A	AT-1	8'-0"	8'-0"	

FINISH LEGEND

AT-A	ACOUSTICAL TILE CEILING (EXISTING 2X4)
AT-1	ACOUSTICAL TILE CEILING (2X2 STANDARD FINISH)
AT-2	ACOUSTICAL TILE CEILING (2X2 WATER PROOF FINISH)
ASP	ACOUSTICAL CONCEALED SPLINE CEILING
MSP	METAL CONCEALED SPLINE CEILING
PPT	PLASTER PAINTED
PSP	PLASTER SPRAYED TEXTURED FINISH
PLG	PLASTER LIQUID GLAZED COATING
GPT	GYPSUM WALL BOARD PAINTED
GLG	GYPSUM WALL BOARD LIQUID GLAZED COATING
CPT	CONCRETE PAINTED
CCS	CONCRETE WITH CONCRETE SEALER
CT	CERAMIC TILE
PVF	PLASTER WITH VINYL WALL FABRIC
GVF	GYPSUM WALL BOARD W/ VINYL WALL FABRIC
QT	QUARRY TILE
CP	CARPET
VT-1	VINYL ASBESTOS TILE
VT-2	VINYL COMPOSITION TILE
SV	SHEET VINYL
EP	EPOXY TERRAZZO
SPCF	CONDUCTIVE FLOORING
SPT	PATCH & PAINT TO MATCH EXISTING
SPM	PATCH TO MATCH EXISTING
RB	RESILIENT BASE
EXP	EXPOSED STRUCTURE

NOTE #1 REMOVE EXISTING LAY-IN ACOUSTICAL CEILING SYSTEM TO EXTENT REQUIRED TO ACCOMPLISH WORK ABOVE CEILING. (STORE MATERIALS AND RE-INSTALL EXISTING CEILING SYSTEM)

NOTE #2 REMOVE EXISTING METAL CONCEALED SPLINE CEILING TO EXTENT REQUIRED TO ACCOMPLISH WORK ABOVE CEILING. (STORE MATERIALS AND RE-INSTALL EXISTING CEILING SYSTEM)

ENG. DIV. DRG.: DATE: SATISFACTORY TO: DATE:

REVISION DESCRIPTION | DATE

NAVAL FACILITIES ENGINEERING COMMAND
DEPARTMENT OF THE NAVY
NAVY PUBLIC WORKS CENTER, JACKSONVILLE, FL
U.S. NAVAL STATION ROOSEVELT ROADS, P.R.
REPAIRS TO NAVAL HOSPITAL
FINISH SCHEDULE

SHERLOCK, SMITH & ADAMS, INC.
ARCHITECTS – ENGINEERS
MONTGOMERY, ALABAMA

U.S. NAVAL STATION ROOSEVELT ROADS, P.R.
REPAIRS TO NAVAL HOSPITAL
FINISH SCHEDULE

CONSTR. CONTR. NO. XXXXX | SPECIFICATION NO. XXXXX | NAVFAC DRWG. NO. XXXXX | TF NO. XXXXX | SHEET ? OF ??

PLATE NO. A3-4

PWC # xxxxx

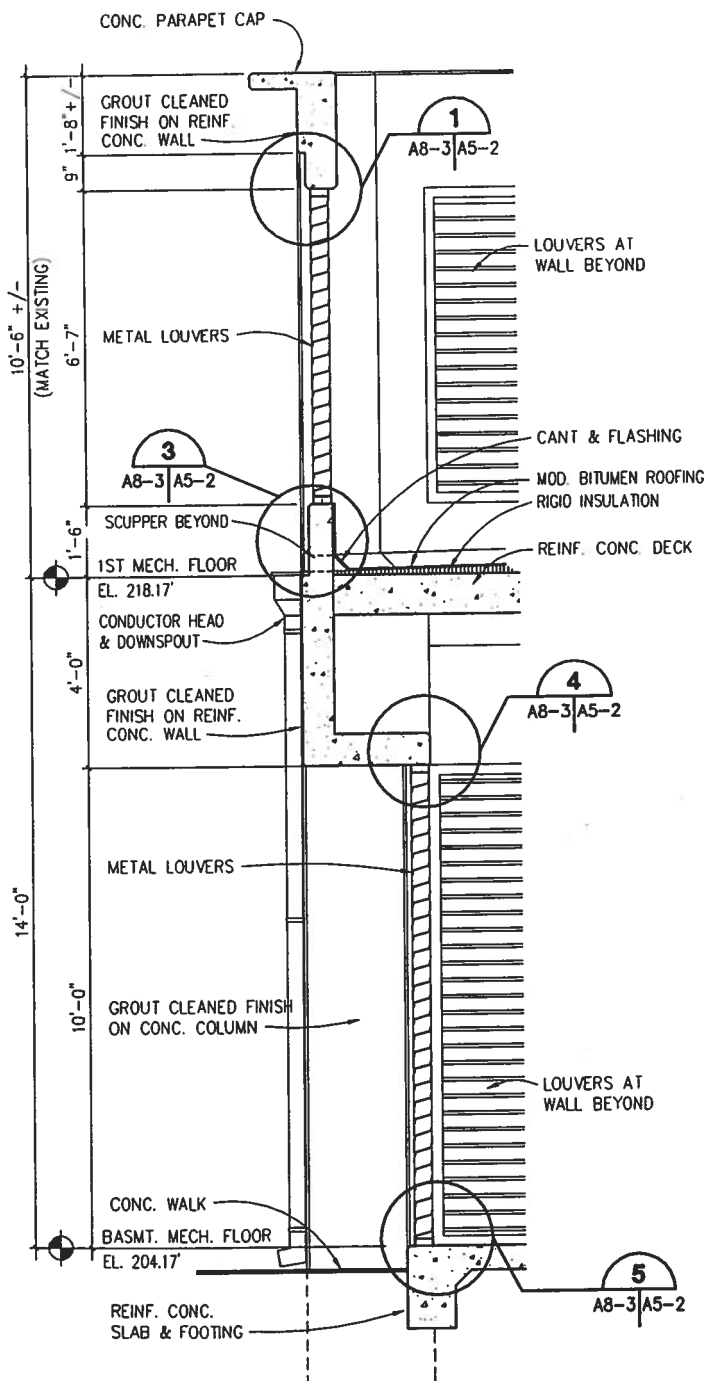

SECTION A / A6-1 A8-3
SCALE: 1/2" = 1'-0"

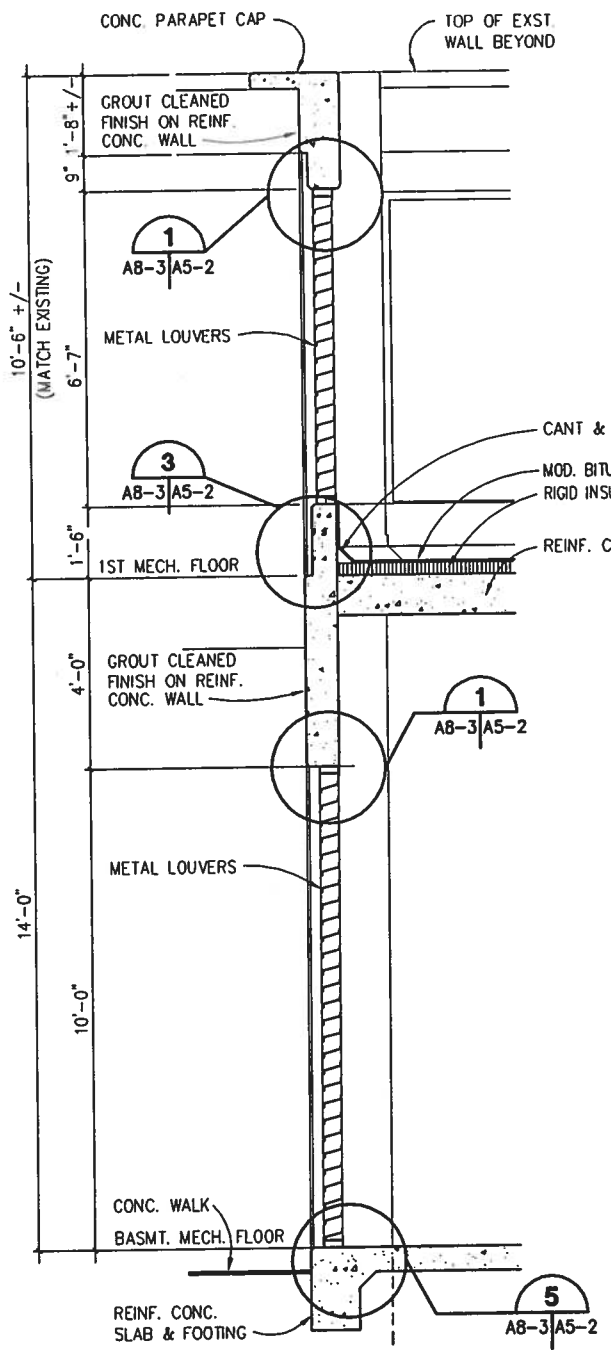

SECTION B / A6-1 A8-3
SCALE: 1/2" = 1'-0"

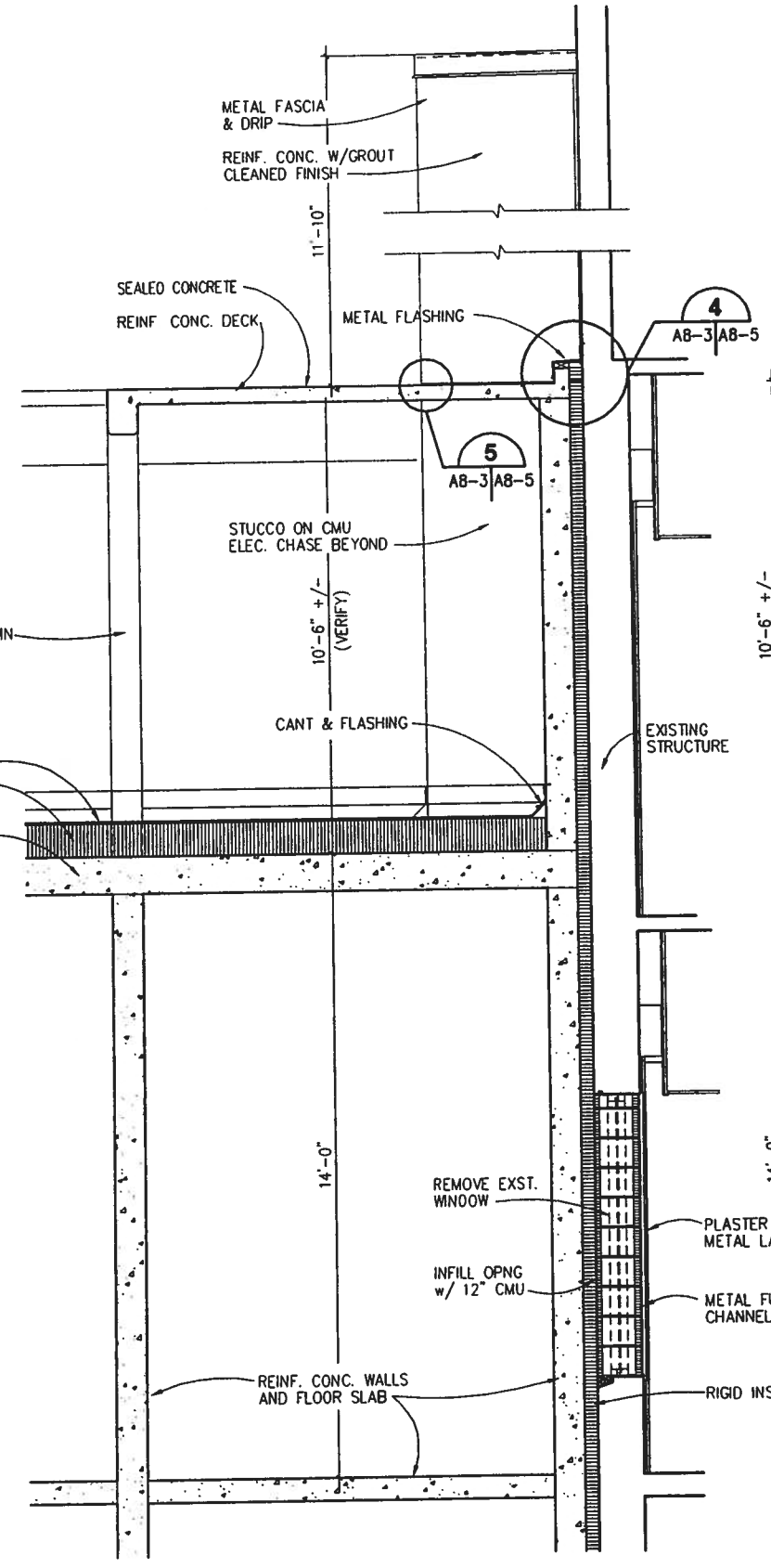

SECTION C / A6-1 A8-3
SCALE: 1/2" = 1'-0"

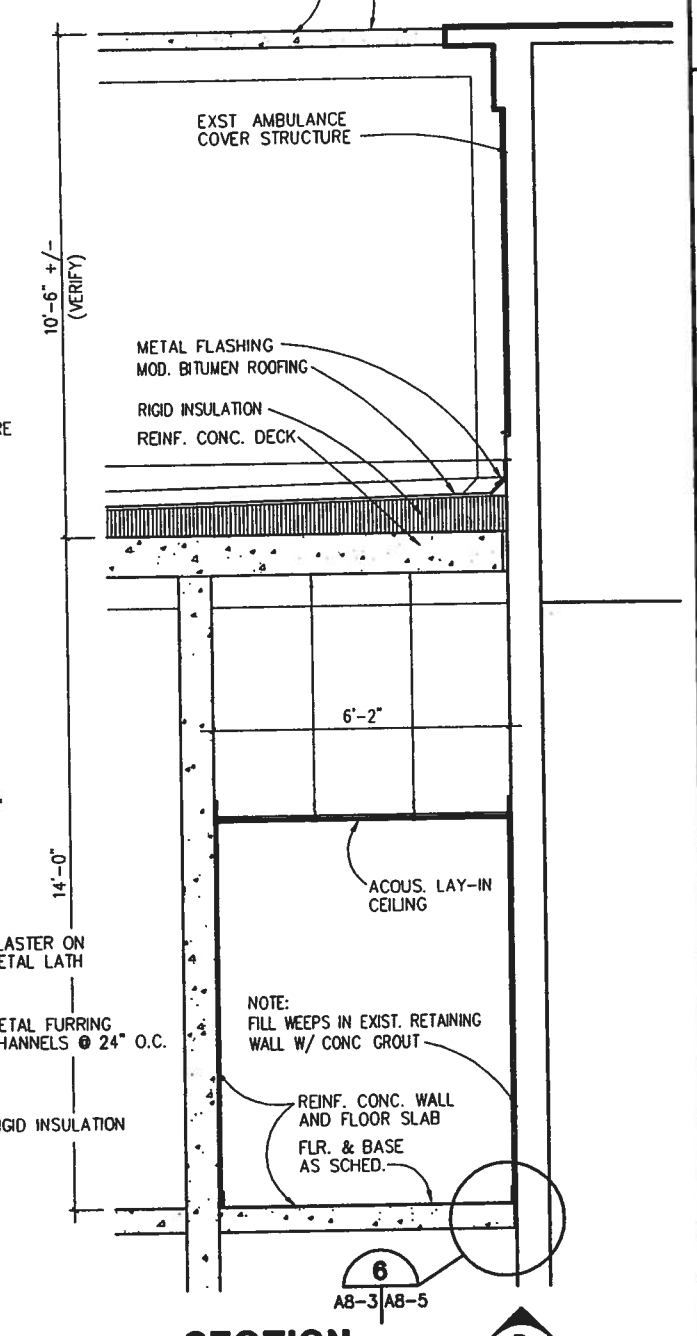

SECTION D / A6-1 A8-3
SCALE: 1/2" = 1'-0"

D 1' 2' 3' 4' 5' 6' 7'
GRAPHIC SCALE
1/2"=1'-0"

SHERLOCK, SMITH & ADAMS, INC.
ARCHITECTS – ENGINEERS
MONTGOMERY, ALABAMA

U.S. NAVAL STATION ROOSEVELT ROADS, P.R.
REPAIRS TO NAVAL HOSPITAL
SECTIONS & DETAILS

CONSTR. CONTR. NO.	SPECIFICATION NO.	NAVFAC DRWG. NO.	TF NO. XXXXX
XXXXX	XXXXX	XXXXX	SHEET ? OF ??

DRAWN BY: D.T.
NAVFAC BY: D.B.C.
ENG. DIV. DR.:
DATE:
SATISFACTORY TO:
DATE:
REVISION DESCRIPTION
DATE

NAVAL FACILITIES ENGINEERING COMMAND
DEPARTMENT OF THE NAVY
NAVY PUBLIC WORKS CENTER, JACKSONVILLE, FL
U.S. NAVAL STATION ROOSEVELT ROADS, P.R.
REPAIRS TO NAVAL HOSPITAL
SECTIONS & DETAILS

PLATE NO.
A8-3

PWC # XXXXX

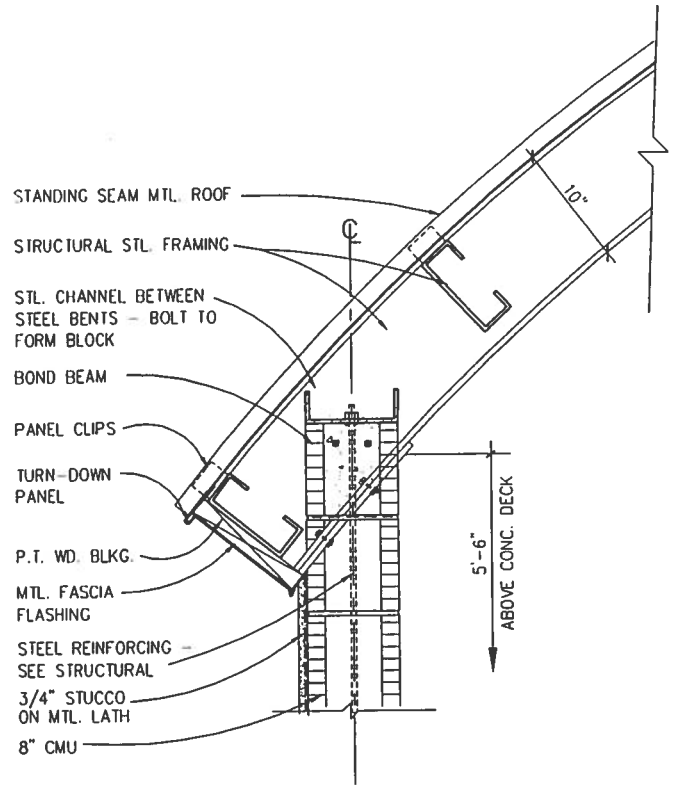

DETAIL 1 A8-4 | A8-4
SCALE: 1 1/2" = 1'-0"

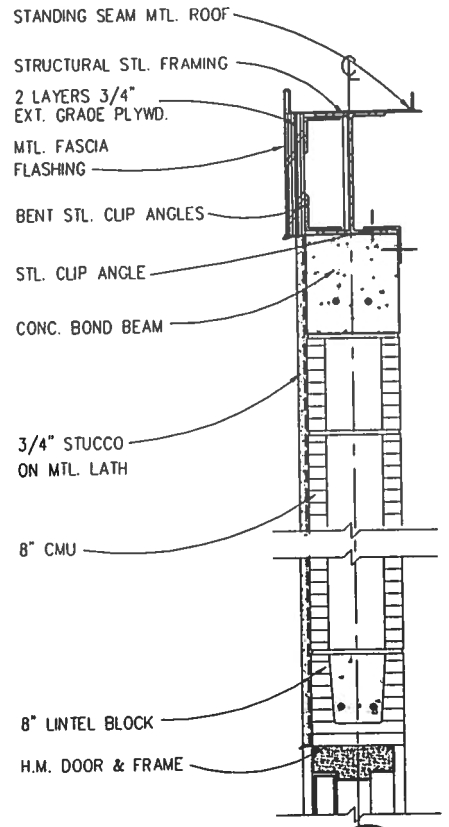

DETAIL 3 A4-2 | A8-4
SCALE: 1 1/2" = 1'-0"

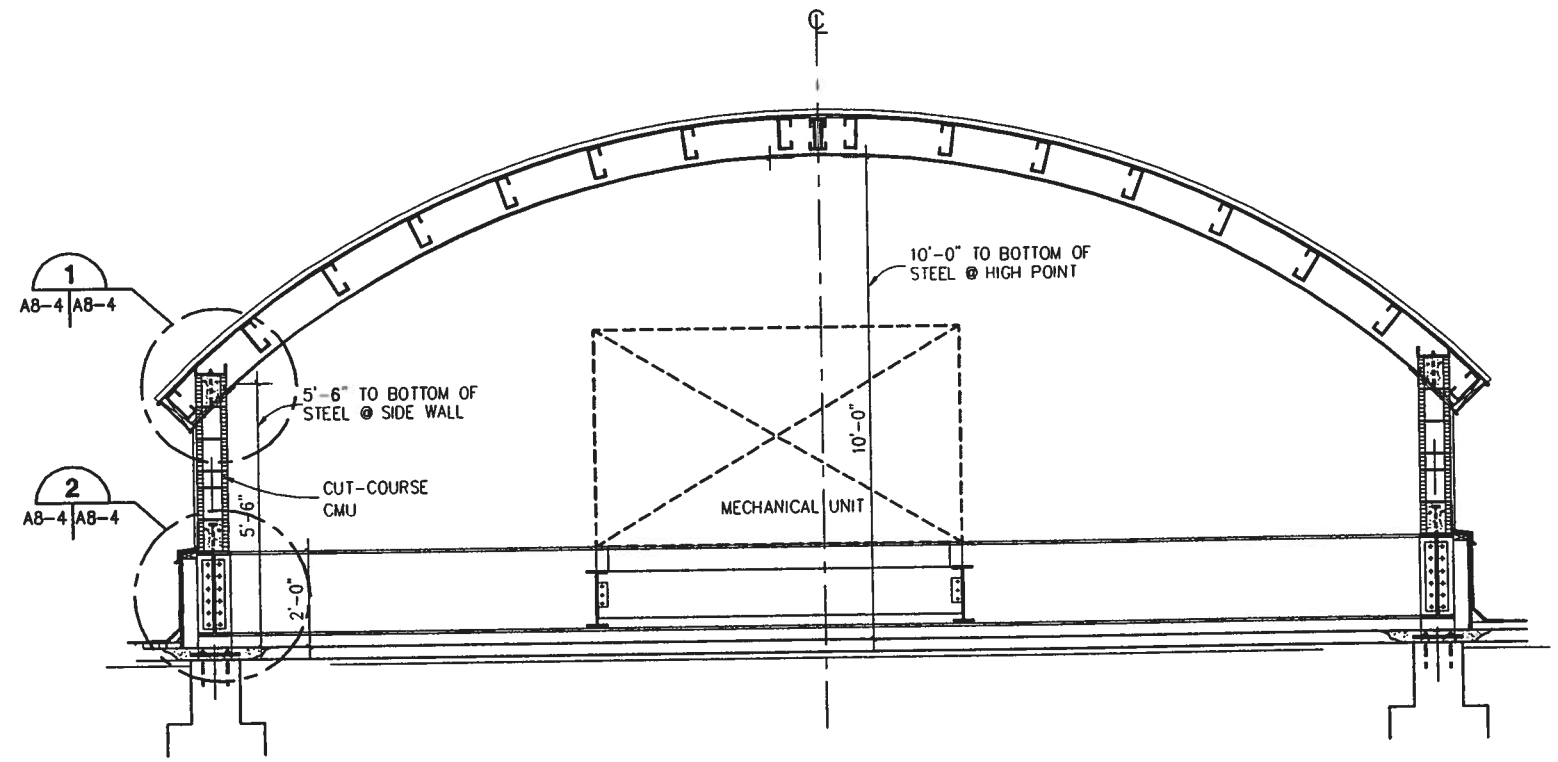

SECTION A A6-1 | A8-4
SCALE: 1/2" = 1'-0"

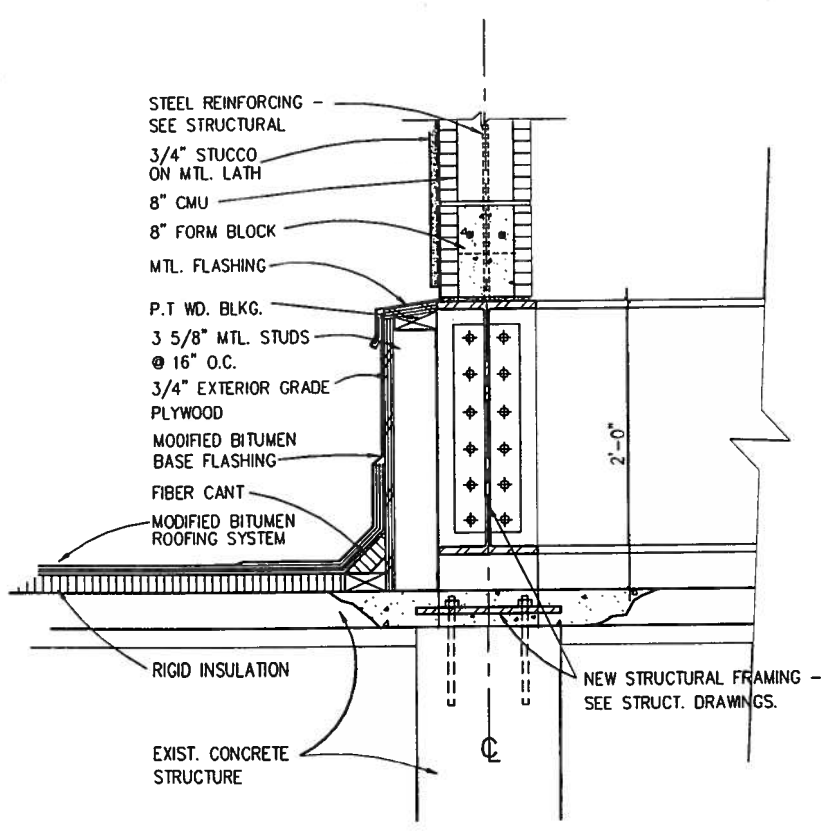

DETAIL 2 A2-4 | A8-4 A8-4
SCALE: 1 1/2" = 1'-0"

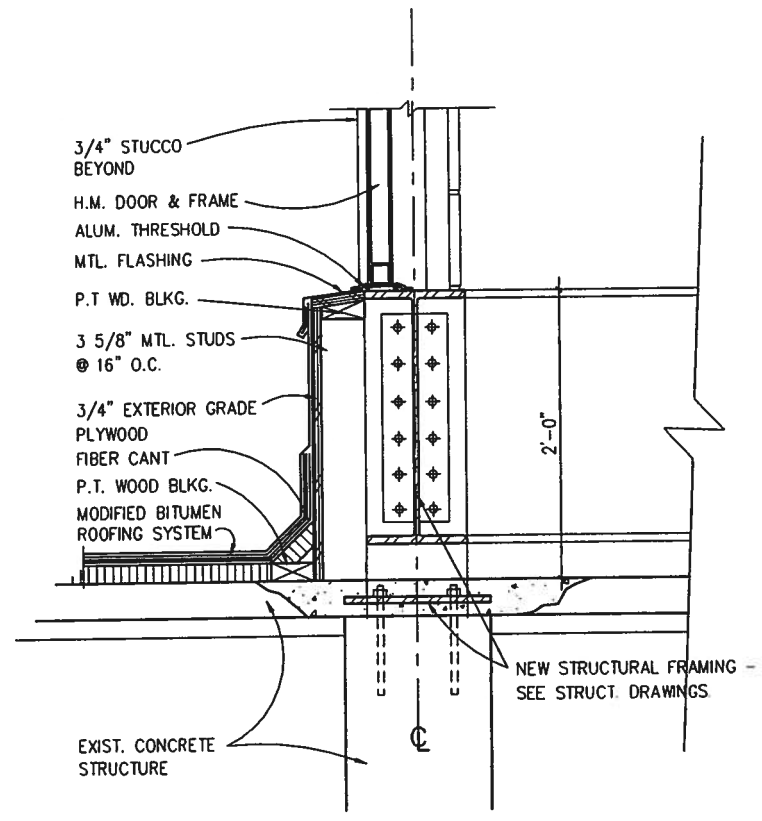

DETAIL 4 A4-2 | A8-4
SCALE: 1 1/2" = 1'-0"

0 3" 6" 9" 1' 6" 2' 6" 3'
GRAPHIC SCALE
1 1/2"=1'-0"

0 1' 2' 3' 4' 5' 6' 7'
GRAPHIC SCALE
1/2"=1'-0"

SHERLOCK, SMITH & ADAMS, INC.
ARCHITECTS - ENGINEERS
MONTGOMERY, ALABAMA

U.S. NAVAL STATION ROOSEVELT ROADS, P.R.
REPAIRS TO NAVAL HOSPITAL
SECTIONS & DETAILS

CONSTR. CONTR. NO.	SPECIFICATION NO.	NAVFAC DRWG. NO.	TF NO. XXXXX
XXXXX	XXXXX	XXXXX	SHEET ? OF ??

DEPARTMENT OF THE NAVY
NAVY PUBLIC WORKS CENTER, JACKSONVILLE, FL
NAVAL FACILITIES ENGINEERING COMMAND
U.S. NAVAL STATION ROOSEVELT ROADS, P.R.
REPAIRS TO NAVAL HOSPITAL
SECTIONS & DETAILS

REVISION DESCRIPTION | DATE | ENG. DIV. DIR.: DATE: SATISFACTORY TO: DATE: DRAWN BY: LT

PLATE NO.
A8-4

PWC # xxxxx

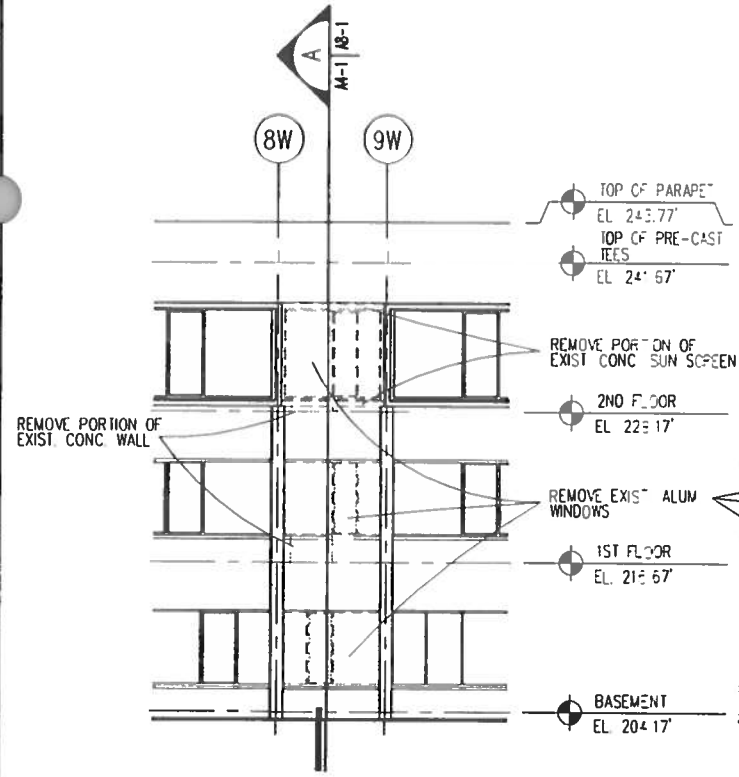

ELEVATION (DEMO) 1
SCALE: 1/8" = 1'-0"
A2-1 A2-2 A2-3 | A4-1

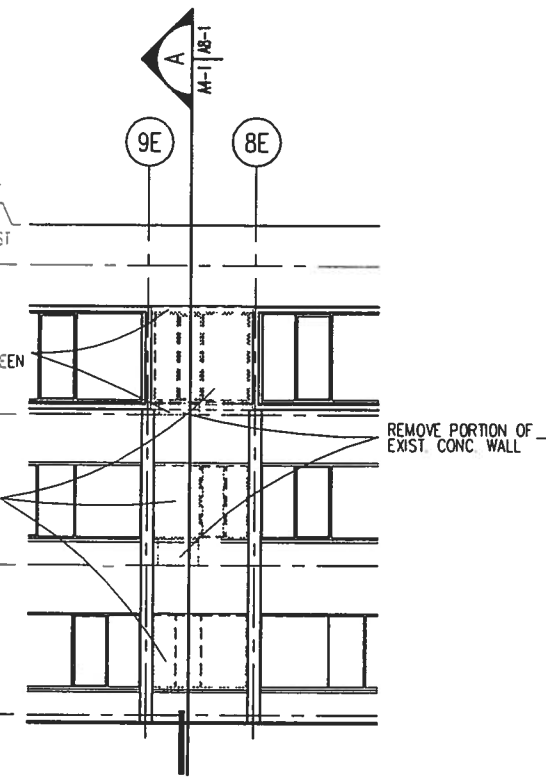

ELEVATION (DEMO) 2
SCALE: 1/8" = 1'-0"
A2-1 A2-2 A2-3 | A4-1

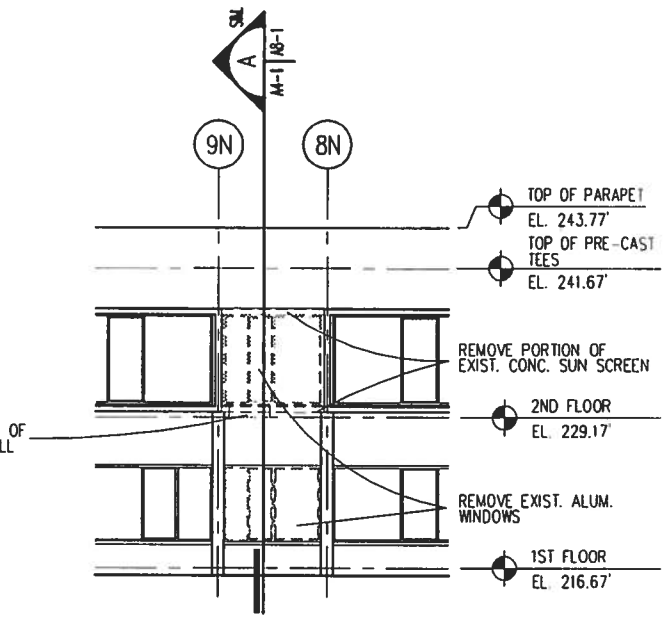

ELEVATION (DEMO) 3
SCALE: 1/8" = 1'-0"
A2-2 A2-3 | A4-1

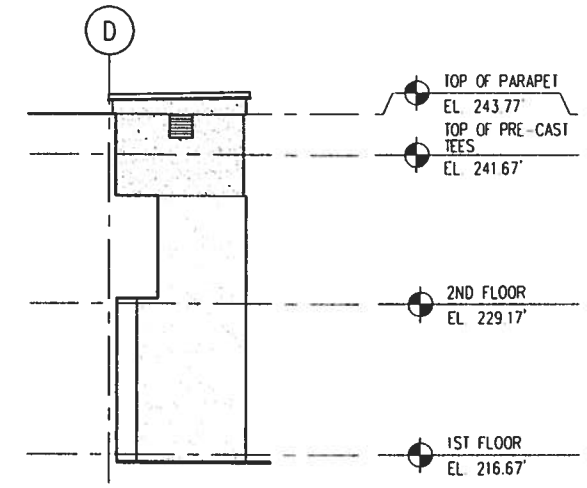

ELEVATION 4
SCALE: 1/8" = 1'-0"
A2-2 A2-3 | A4-1

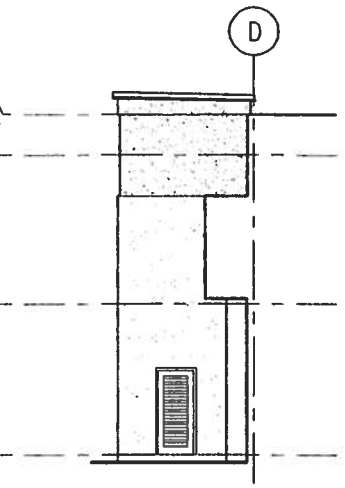

ELEVATION 5
SCALE: 1/8" = 1'-0"
A2-2 A2-3 | A4-1

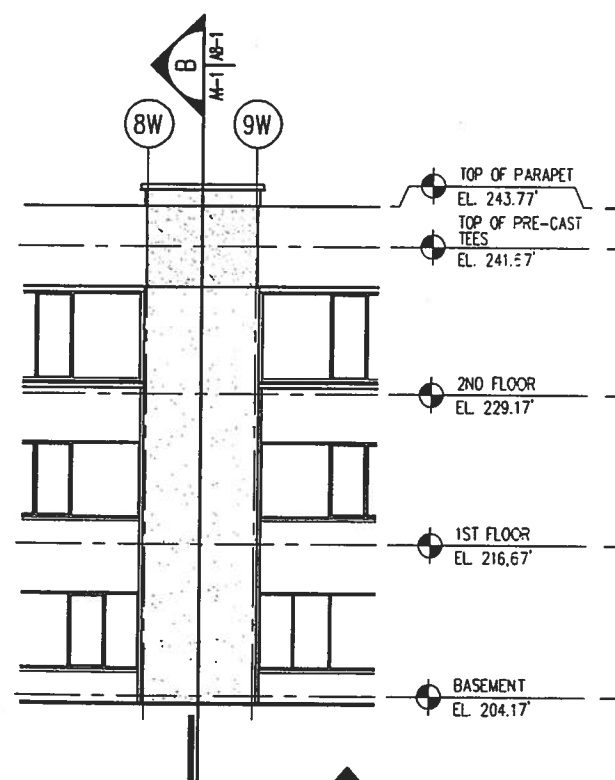

ELEVATION 6
SCALE: 1/8" = 1'-0"
A2-1 A2-2 A2-3 | A4-1

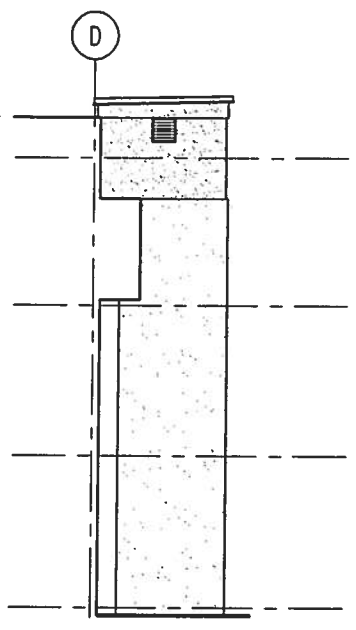

ELEVATION 7
SCALE: 1/8" = 1'-0"
A2-1 A2-2 A2-3 | A4-1

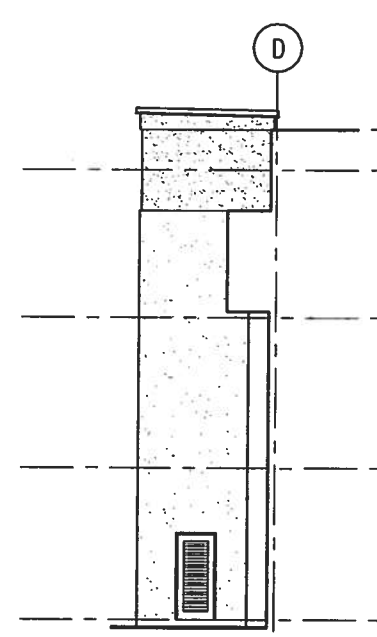

ELEVATION 8
SCALE: 1/8" = 1'-0"
A2-1 A2-2 A2-3 | A4-1

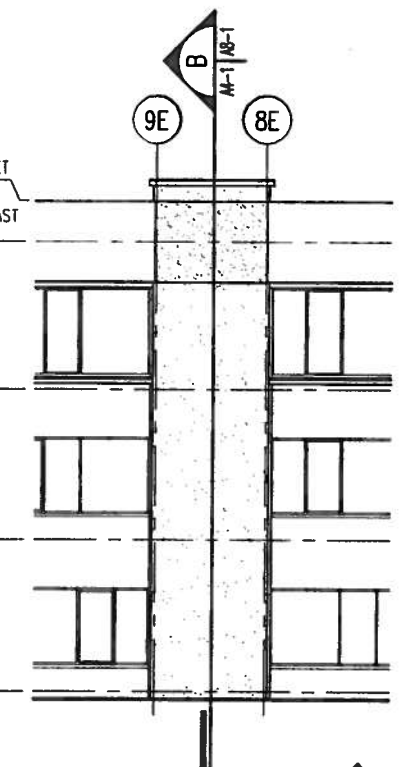

ELEVATION 9
SCALE: 1/8" = 1'-0"
A2-1 A2-2 A2-3 | A4-1

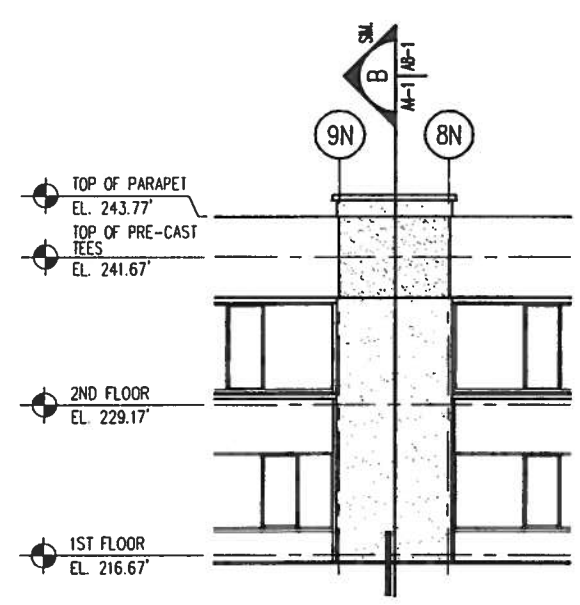

ELEVATION 10
SCALE: 1/8" = 1'-0"
A2-2 A2-3 | A4-1

0 5 10 15 20
GRAPHIC SCALE
1/8"=1'-0"

SHERLOCK, SMITH & ADAMS, INC.
ARCHITECTS - ENGINEERS
MONTGOMERY, ALABAMA

U.S. NAVAL STATION ROOSEVELT ROADS, P.R.
REPAIRS TO NAVAL HOSPITAL
EXTERIOR ELEVATIONS

CONSTR. CONTR. NO.	SPECIFICATION NO.	NAVFAC DRWG. NO.	TF NO. XXXXX
XXXXX	XXXXX	XXXXX	SHEET ? OF ??

SEAL AREA

ENG. DIV. DIR. DATE
SATISFACTORY TO DATE
DESIGN BY: DAC DRAWN BY: CLT

REVISION DESCRIPTION DATE

DEPARTMENT OF THE NAVY NAVAL FACILITIES ENGINEERING COMMAND
NAVY PUBLIC WORKS CENTER, JACKSONVILLE, FL
U.S. NAVAL STATION ROOSEVELT ROADS, P.R.
REPAIRS TO NAVAL HOSPITAL
EXTERIOR ELEVATIONS

PLATE NO.
A4-1

PWC # XXXXX

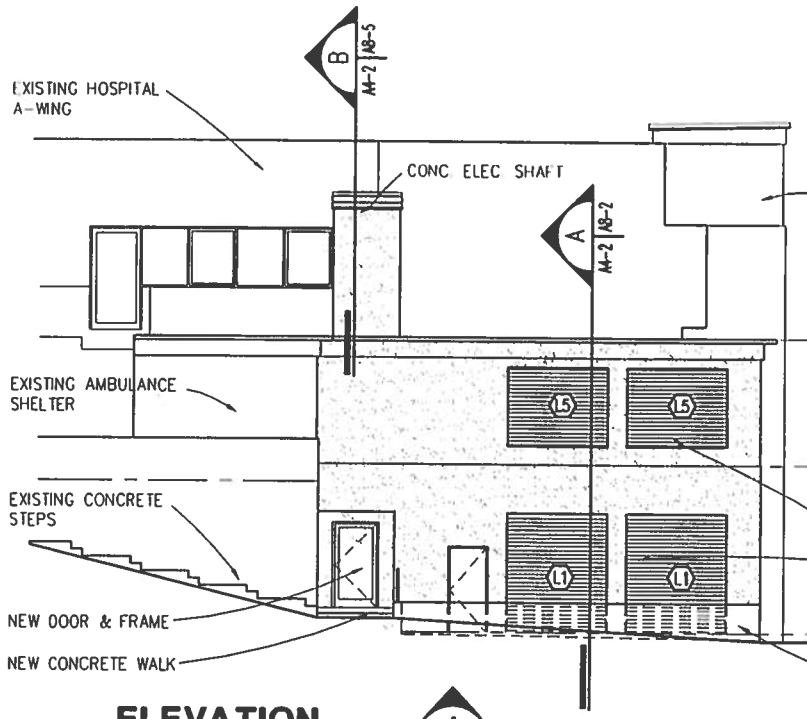

ELEVATION 1
SCALE: 1/8" = 1'-0"
A2-1 | A4-2
A2-2

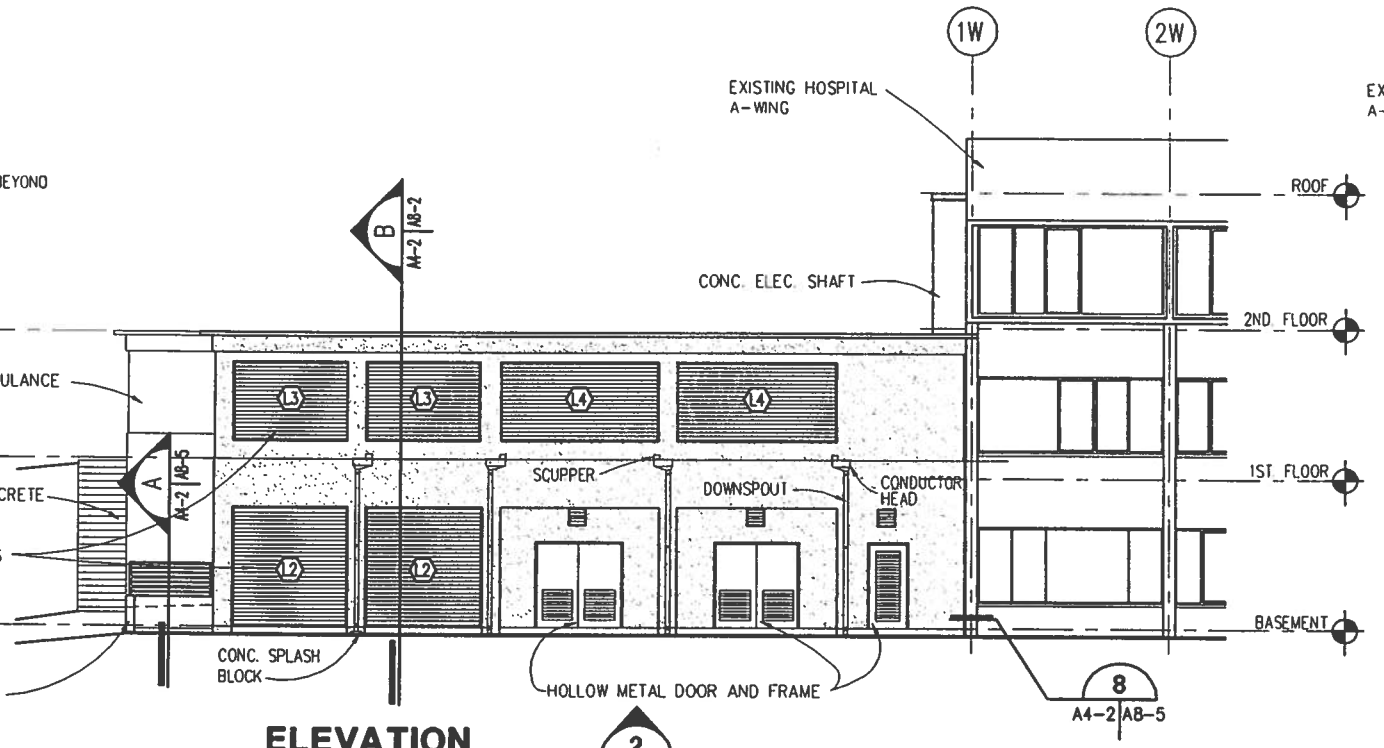

ELEVATION 2
SCALE: 1/8" = 1'-0"
A2-1 | A4-2
A2-2

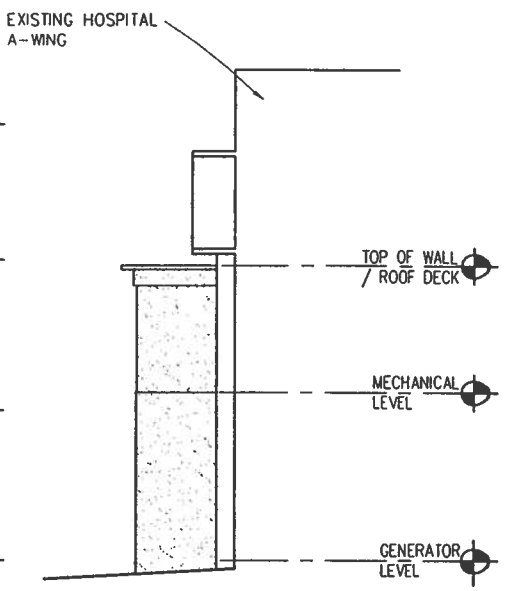

ELEVATION 3
SCALE: 1/8" = 1'-0"
A2-1 | A4-2
A2-2

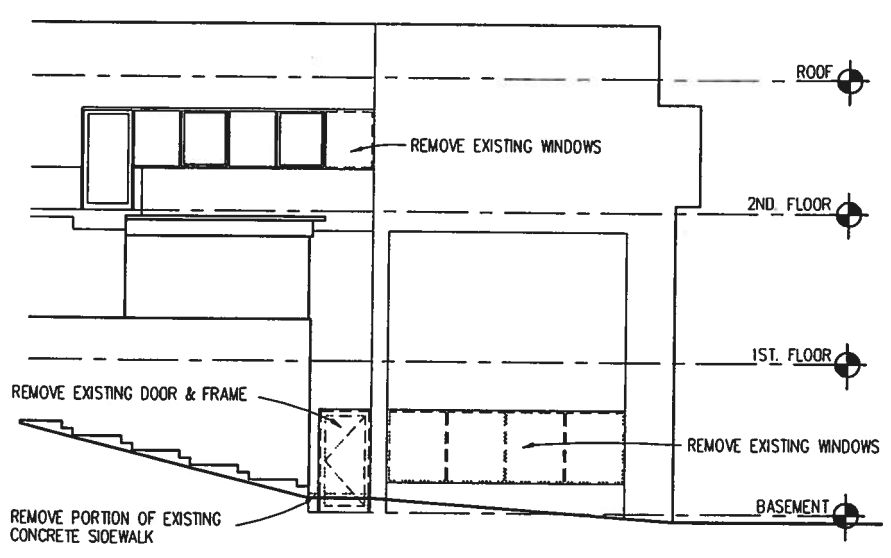

ELEVATION (DEMO) 4
SCALE: 1/8" = 1'-0"
A2-1 | A4-2
A2-2

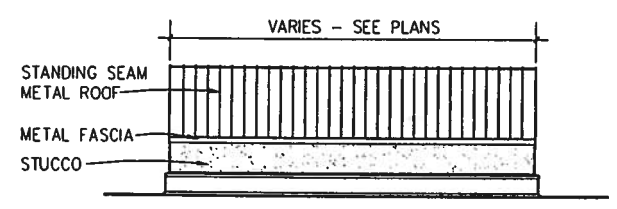

ELEVATION 5
SCALE: 1/8" = 1'-0"
A2-4 | A4-2

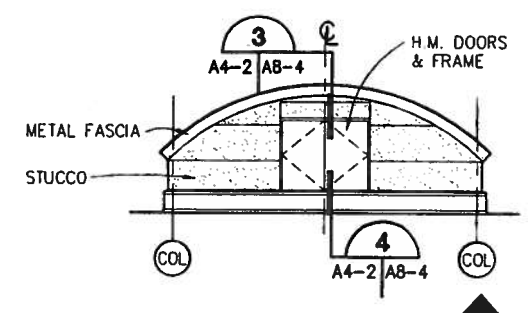

ELEVATION 6
SCALE: 1/8" = 1'-0"
A2-4 | A4-2

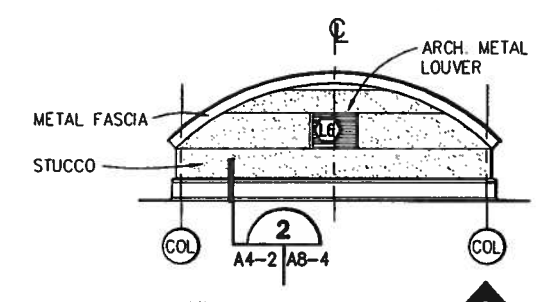

ELEVATION 7
SCALE: 1/8" = 1'-0"
A2-4 | A4-2

0 5 10 15 20
GRAPHIC SCALE
1/8"=1'-0"

SHERLOCK, SMITH & ADAMS, INC.
ARCHITECTS - ENGINEERS
MONTGOMERY, ALABAMA

U.S. NAVAL STATION ROOSEVELT ROADS, P.R.
REPAIRS TO NAVAL HOSPITAL
EXTERIOR ELEVATIONS

CONSTR. CONTR. NO.	SPECIFICATION NO.	NAVFAC DRWG. NO.	TF NO. XXXXX
XXXXX	XXXXX	XXXXX	SHEET ? OF ??

SEAL AREA

ENG. DIV. DIR.: DATE:
SATISFACTORY TO: DATE:

DATE
REVISION DESCRIPTION

DEPARTMENT OF THE NAVY
NAVAL FACILITIES ENGINEERING COMMAND
NAVY PUBLIC WORKS CENTER, JACKSONVILLE, FL
U.S. NAVAL STATION ROOSEVELT ROADS, P.R.
REPAIRS TO NAVAL HOSPITAL
EXTERIOR ELEVATIONS

PLATE NO.
A4-2

PWC # XXXXX

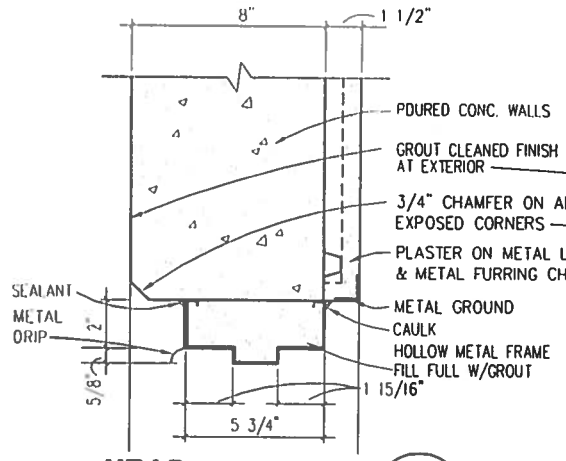

HEAD 1 — A5-1 | A5-1
SCALE: 3"=1'-0"

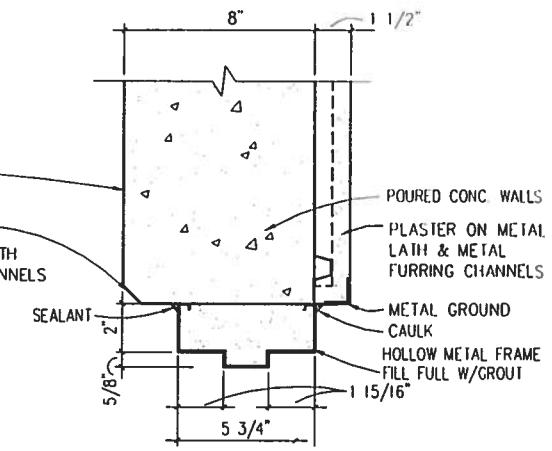

JAMB 2 — A5-1 | A5-1
SCALE: 3"=1'-0"

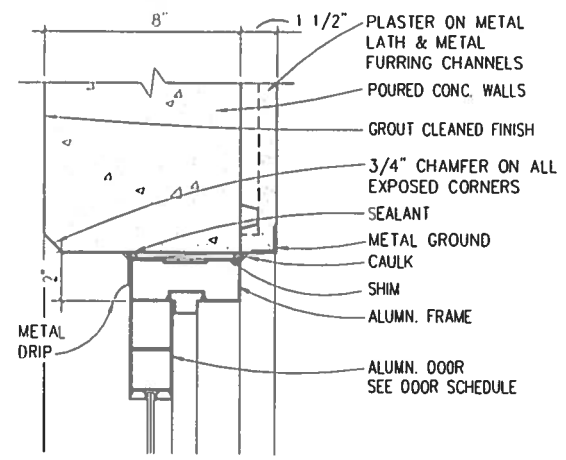

HEAD 3 — A5-1 | A5-1
SCALE: 3"=1'-0"

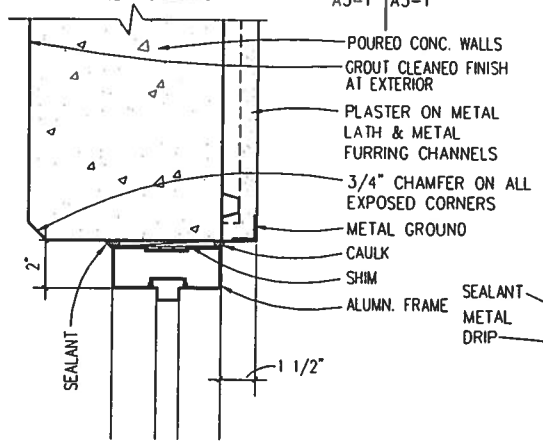

JAMB 4 — A5-1 | A5-1
SCALE: 3"=1'-0"

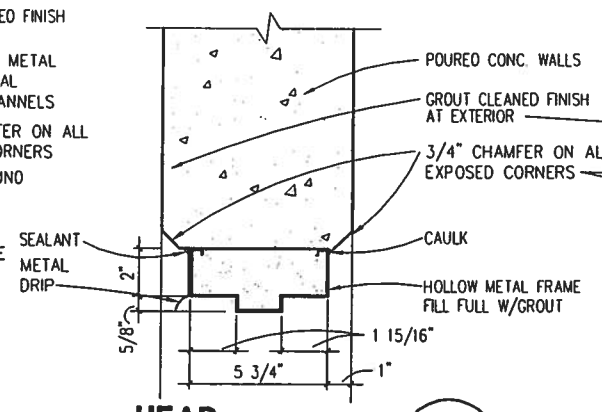

HEAD 5 — A5-1 | A5-1
SCALE: 3"=1'-0"

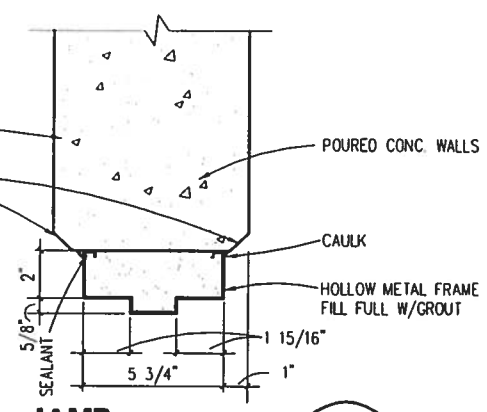

JAMB 6 — A5-1 | A5-1
SCALE: 3"=1'-0"

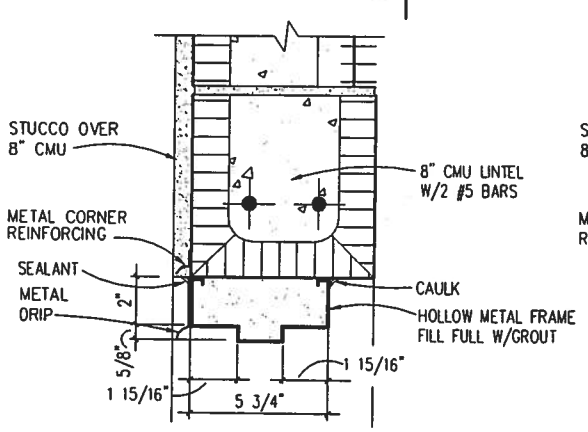

HEAD 7 — A5-1 | A5-1
SCALE: 3"=1'-0"

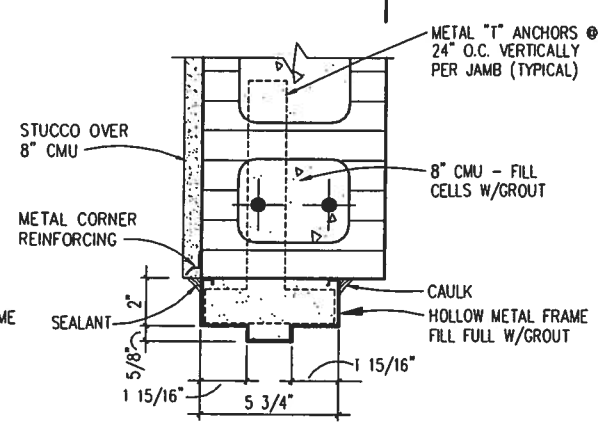

JAMB 8 — A5-1 | A5-1
SCALE: 3"=1'-0"

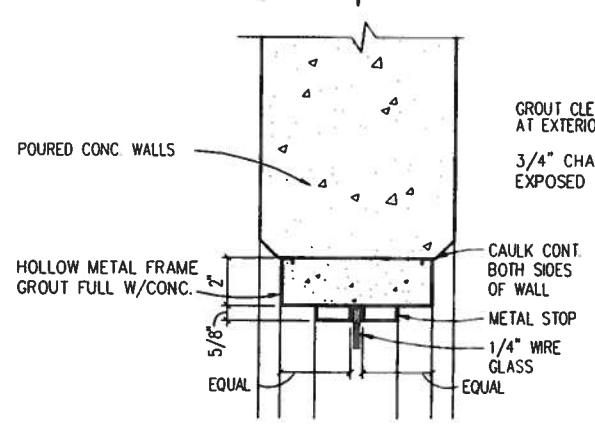

HEAD (SILL SIMILAR) 9 — A5-1 | A5-1
SCALE: 3"=1'-0"

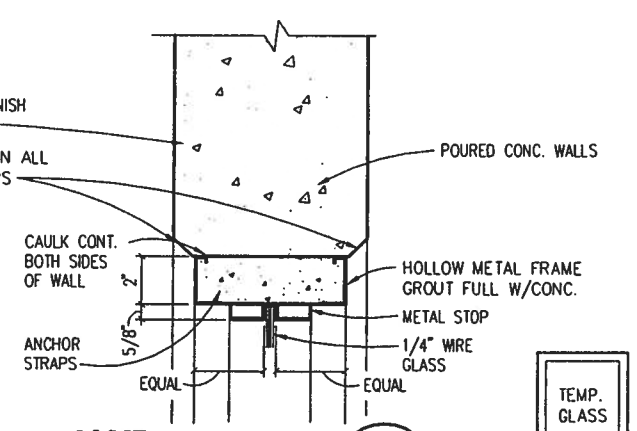

JAMB 10 — A5-1 | A5-1
SCALE: 3"=1'-0"

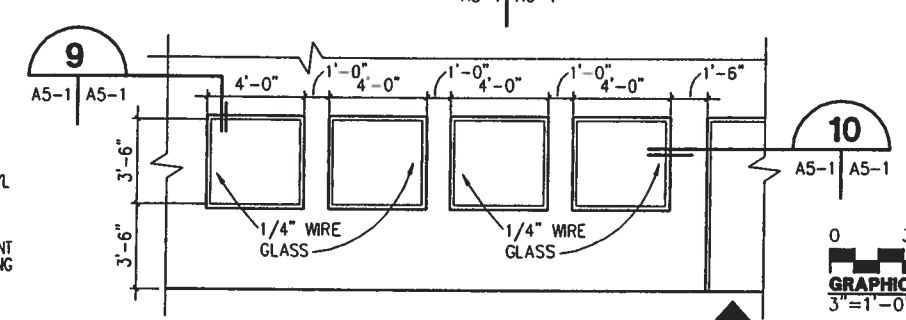

ELEVATION 11 — A5-1 | A5-1, A6-1
SCALE: 1/4" = 1'-0"

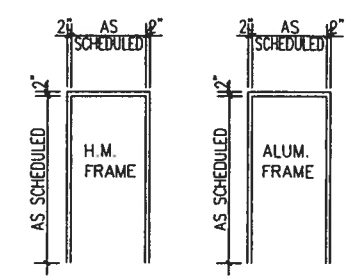

HM-1 AL-1

FRAME TYPES

SCALE : 1/4"=1'-0"

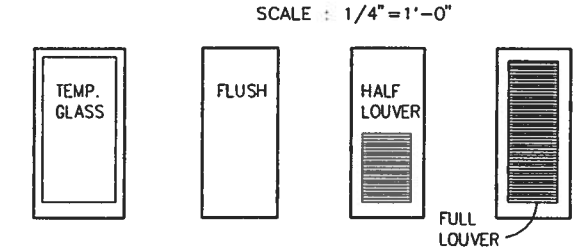

TYPE A TYPE B TYPE C TYPE D

DOOR TYPES

SCALE : 1/4"=1'-0"

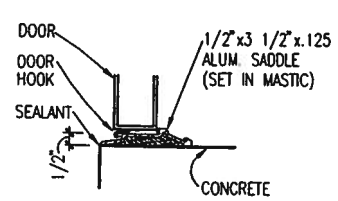

THRESHOLD TYPE 1
N.T.S.

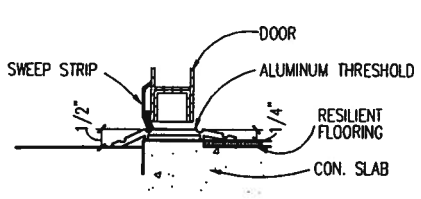

THRESHOLD TYPE 2
N.T.S.

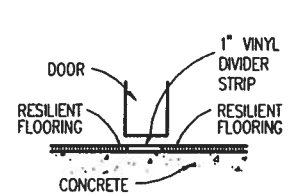

THRESHOLD TYPE 3
N.T.S.

DOOR SCHEDULE

DOOR NO.	DOOR SIZE W	DOOR SIZE H	DOOR SIZE T	DOOR TYPE	DOOR MATERIAL	FRAME TYPE	LABEL HOURS	HDW. SET	JAMB	HEAD	REMARKS
A0101	3'-0"	7'-0"	1 3/4"	D	HM	HM-1	-	1	6/A5-1	5/A5-1	
A0102	3'-0"	7'-0"	1 3/4"	B	HM	HM-1	-	4	6/A5-1	5/A5-1	
A0103	PR 3'-6"	7'-0"	1 3/4"	C	HM	HM-1	-	6	6/A5-1	5/A5-1	
A0103A	3'-0"	7'-0"	1 3/4"	B	HM	HM-1	-	3	6/A5-1	5/A5-1	
A0104	PR 3'-6"	7'-0"	1 3/4"	C	HM	HM-1	-	6	6/A5-1	5/A5-1	
A0104A	3'-0"	7'-0"	1 3/4"	B	HM	HM-1	-	3	6/A5-1	5/A5-1	
A0105	3'-0"	7'-0"	1 3/4"	D	HM	HM-1	-	4	6/A5-1	5/A5-1	
A0105A	3'-0"	7'-0"	1 3/4"	B	HM	HM-1	-	3	6/A5-1	5/A5-1	
A0105B	3'-0"	7'-0"	1 3/4"	B	HM	HM-1	-	5	6/A5-1	5/A5-1	
A0106	3'-6"	7'-0"	1 3/4"	A	ALUMN.	AL-1	-	9	4/A5-1	3/A5-1	
A0106A	3'-6"	7'-0"	1 3/4"	B	HM	HM-1	-	8	•	•	• SIMILAR TO 7&8 A5-1 EXCEPT EXIST. CONST.
B0101	3'-0"	7'-0"	1 3/4"	D	HM	HM-1	-	1	6/A5-1	5/A5-1	
A1101	3'-0"	7'-0"	1 3/4"	B	HM	HM-1	90 MIN.	2	2/A5-1	1/A5-1	
A1102	3'-6"	7'-0"	1 3/4"	B	HM	HM-1	-	7	•	•	• SIMILAR TO 5&6 A5-1 EXCEPT EXIST. CONST.
B1101	3'-0"	7'-0"	1 3/4"	B	HM	HM-1	90 MIN.	2	2/A5-1	1/A5-1	
C1101	3'-0"	7'-0"	1 3/4"	D	HM	HM-1	-	1	6/A5-1	5/A5-1	
A2101	3'-0"	7'-0"	1 3/4"	B	HM	HM-1	90 MIN.	2	2/A5-1	1/A5-1	
B2101	3'-0"	7'-0"	1 3/4"	B	HM	HM-1	90 MIN.	2	2/A5-1	1/A5-1	
C2101	3'-0"	7'-0"	1 3/4"	B	HM	HM-1	90 MIN.	2	2/A5-1	1/A5-1	
A3101	PR 3'-6"	5'-10"	1 3/4"	B	HM	HM-1	-	6	8/A5-1	7/A5-1	
C3101	PR 3'-6"	5'-10"	1 3/4"	B	HM	HM-1	-	6	8/A5-1	7/A5-1	

0 3" 6" 9" 1'
GRAPHIC SCALE
3"=1'-0"

0 5 10 15
GRAPHIC SCALE
1/4"=1'-0"

SHERLOCK, SMITH & ADAMS, INC.
ARCHITECTS - ENGINEERS
MONTGOMERY, ALABAMA

U.S. NAVAL STATION ROOSEVELT ROADS, P.R.
REPAIRS TO NAVAL HOSPITAL
DOOR & VIEW WINDOW SCHEDULE & DETAILS

CONSTR. CONTR. NO.	SPECIFICATION NO.	NAVFAC DRWG. NO.	TF NO. XXXXX
XXXXX	XXXXX	XXXXX	SHEET ? OF ??

SEAL AREA

DSG. DIV. DIR.: DATE:
SATISFACTORY TO: DATE:
DESIGN BY: DAC DRAWN BY: ET
REVISION DESCRIPTION DATE

NAVAL FACILITIES ENGINEERING COMMAND
DEPARTMENT OF THE NAVY
NAVY PUBLIC WORKS CENTER, JACKSONVILLE, FL
U.S. NAVAL STATION ROOSEVELT ROADS, P.R.
REPAIRS TO NAVAL HOSPITAL
DOOR & VIEW WINDOW SCHEDULE & DETAILS

PLATE NO.
A5-1

PWC # XXXXX

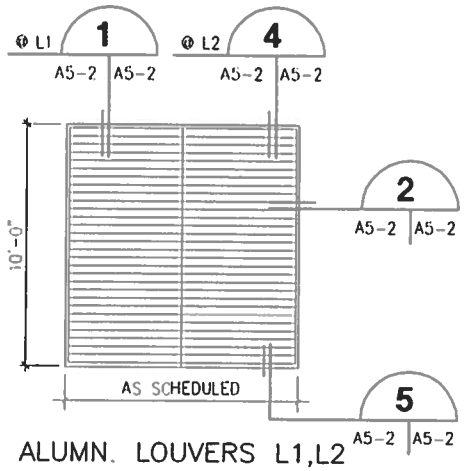

ALUMN. LOUVERS L1,L2

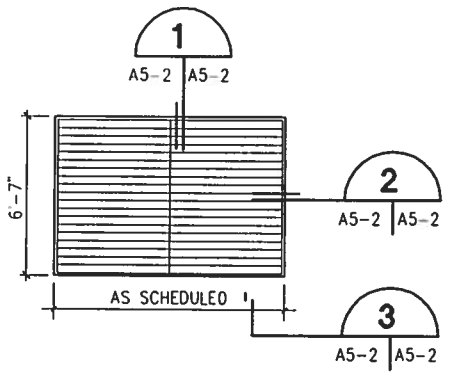

ALUMN. LOUVERS L3,L4,L5

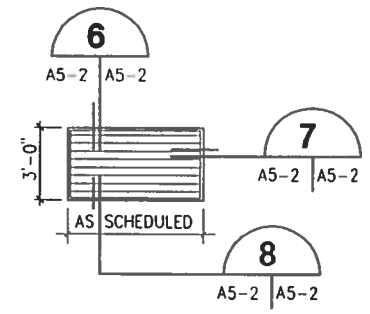

ALUMN. LOUVERS L6

LOUVER SCHEDULE

SCALE : 1/4"=1'-0"

MK.	LENGTH	HEIGHT
L1	8'-5"	10'-0"
L2	9'-7 1/2"	10'-0"
L3	9'-7 1/2"	6'-7"
L4	13'-2"	6'-7"
L5	8'-5"	6'-7"
L6	4'-0"	3'-0"

NOTE:
FIELD VERIFY ALL OPENING SIZES PRIOR TO LOUVER FABRICATION.

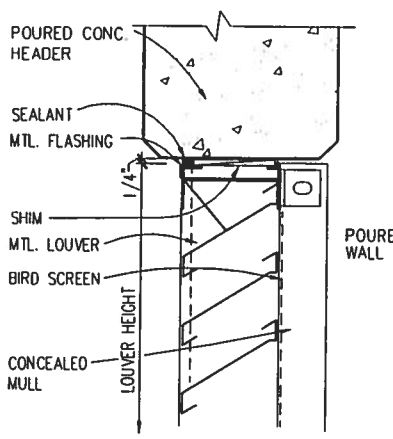

HEAD DETAIL @ ALUMN. LOUVER 1

SCALE: 3"=1'-0"

A5-2 A8-3 | A5-2

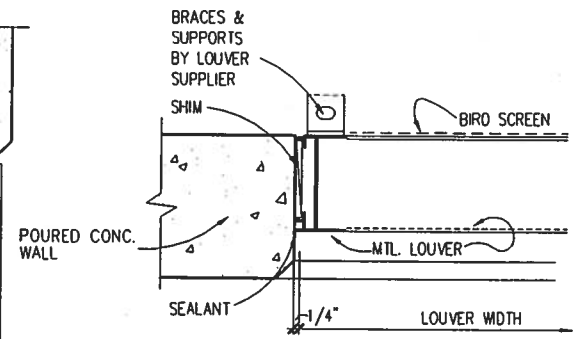

JAMB DETAIL @ ALUMN. LOUVER 2

SCALE: 3"=1'-0"

A5-2 | A5-2

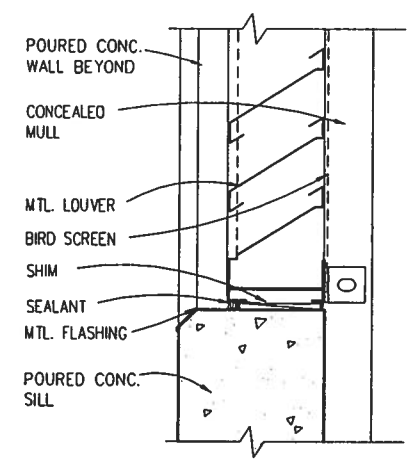

SILL DETAIL @ ALUMN. LOUVER 3

SCALE: 3"=1'-0"

A5-2 A8-3 | A5-2

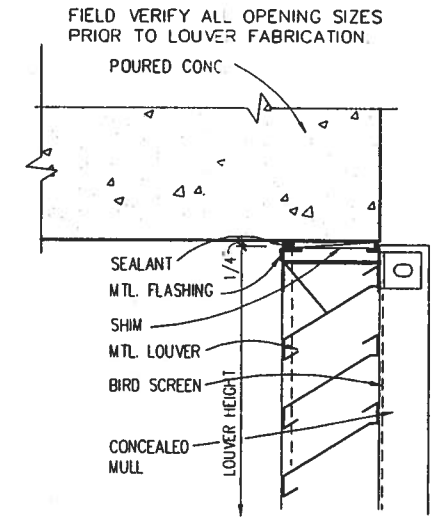

HEAD DETAIL @ ALUMN. LOUVER 4

SCALE: 3"=1'-0"

A5-2 A8-3 | A5-2

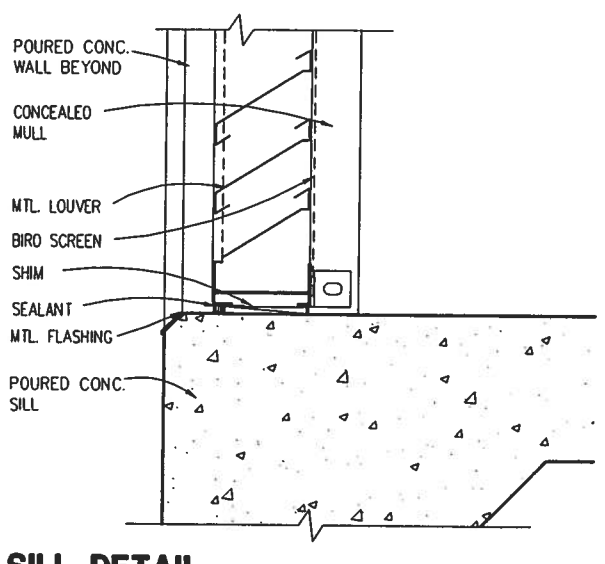

SILL DETAIL @ ALUMN. LOUVER 5

SCALE: 3"=1'-0"

A5-2 A8-3 | A5-2

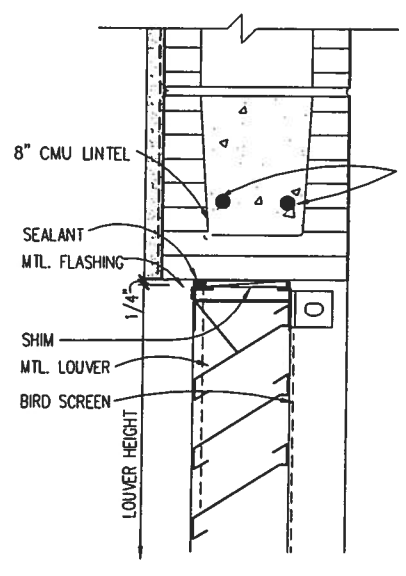

HEAD DETAIL @ ALUMN. LOUVER 6

SCALE: 3"=1'-0"

A5-2 | A5-2

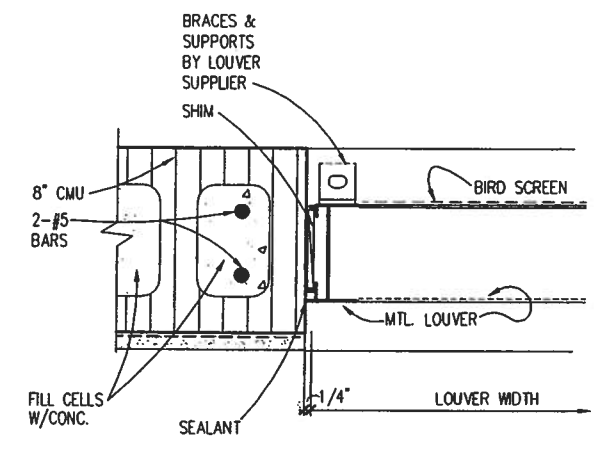

JAMB DETAIL @ ALUMN. LOUVER 7

SCALE: 3"=1'-0"

A5-2 | A5-2

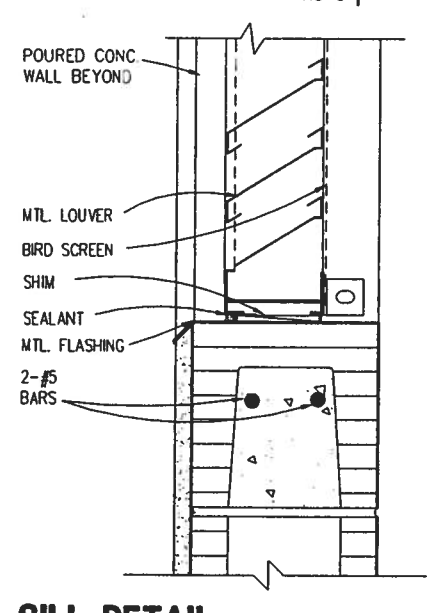

SILL DETAIL @ ALUMN. LOUVER 8

SCALE: 3"=1'-0"

A5-2 | A5-2

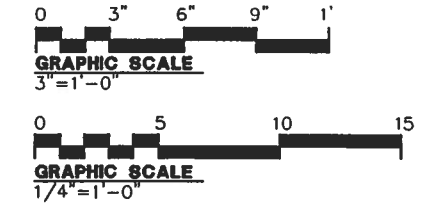

SHERLOCK, SMITH & ADAMS, INC.
ARCHITECTS - ENGINEERS
MONTGOMERY, ALABAMA

U.S. NAVAL STATION ROOSEVELT ROADS, P.R.
REPAIRS TO NAVAL HOSPITAL
LOUVER SCHEDULE AND DETAILS

CONSTR. CONTR. NO.	SPECIFICATION NO.	NAVFAC DRWG. NO.	TF NO. XXXXX
XXXXX	XXXXX	XXXXX	SHEET ? OF ??

SEAL AREA

ENG. DIV. DIR.: DATE
SATISFACTORY TO: DATE

DATE	REVISION DESCRIPTION

NAVAL FACILITIES ENGINEERING COMMAND
DEPARTMENT OF THE NAVY
NAVY PUBLIC WORKS CENTER, JACKSONVILLE, FL
U.S. NAVAL STATION ROOSEVELT ROADS, P.R.
REPAIRS TO NAVAL HOSPITAL
LOUVER SCHEDULE AND DETAILS

PLATE NO.
A5-2

PWC # XXXXX

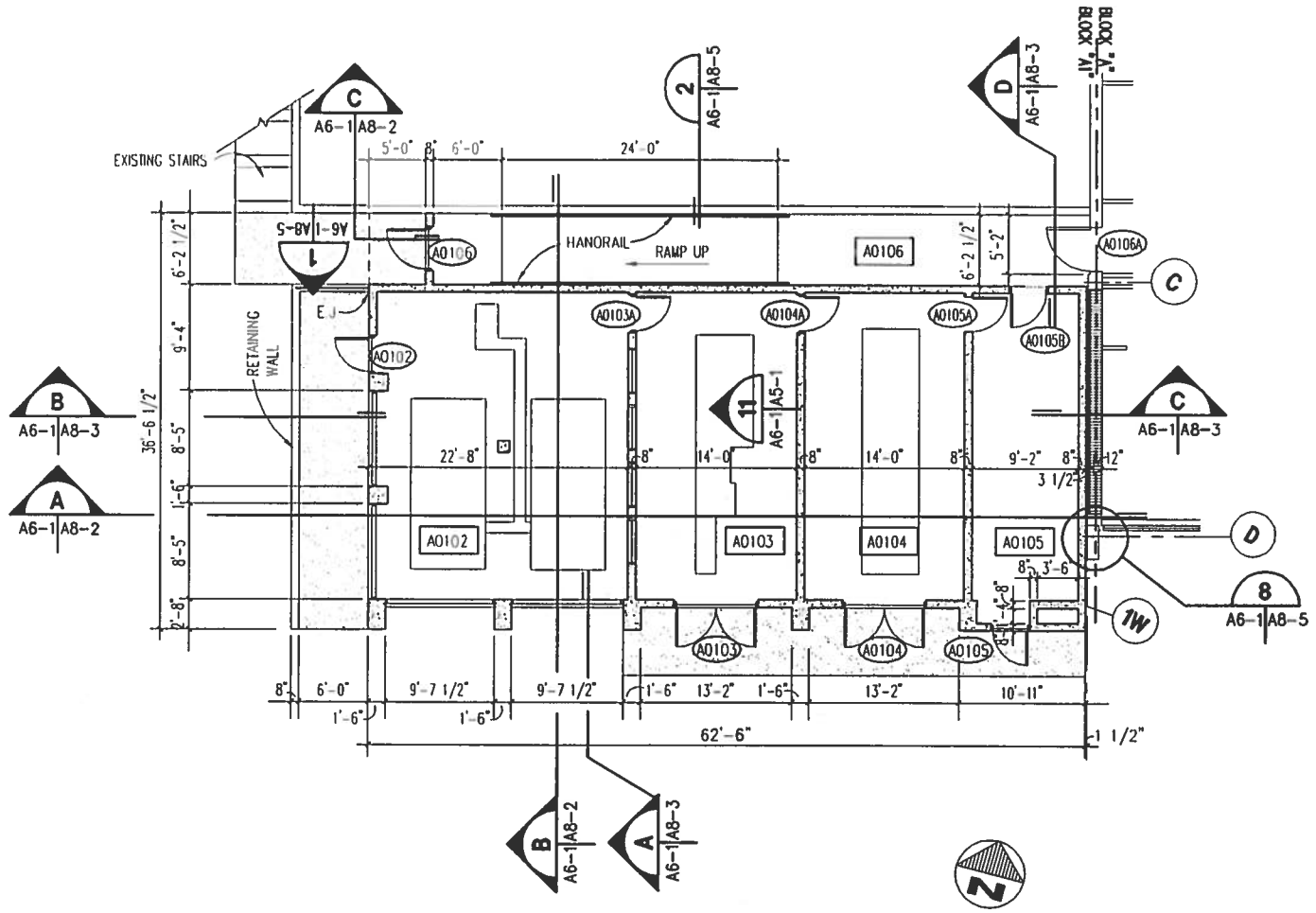

UTILITY ADDITION / GENERATOR LEVEL (LSP1)

SCALE: 1/8" = 1'-0"

A2-1 | A6-1

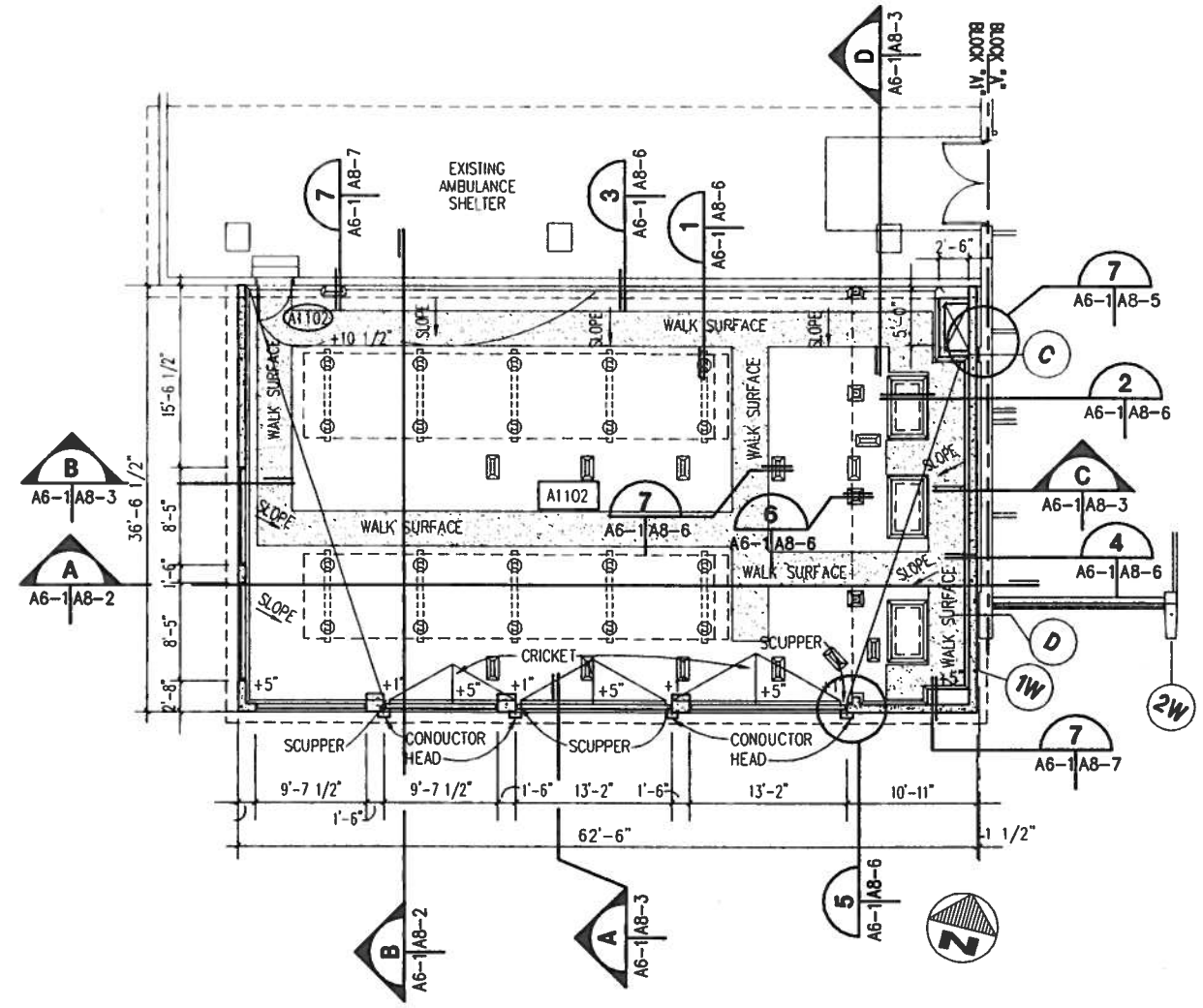

UTILITY ADDITION / MECHANICAL LEVEL (LSP2)

SCALE: 1/8" = 1'-0"

A2-2 | A6-1

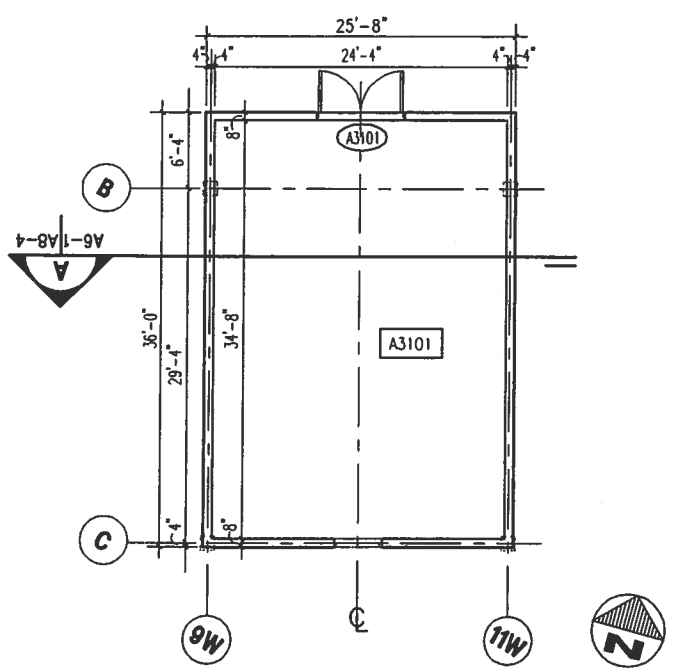

MECHANICAL PENTHOUSE PLAN (LSP3)

SCALE: 1/8" = 1'-0"

A2-4 | A6-1

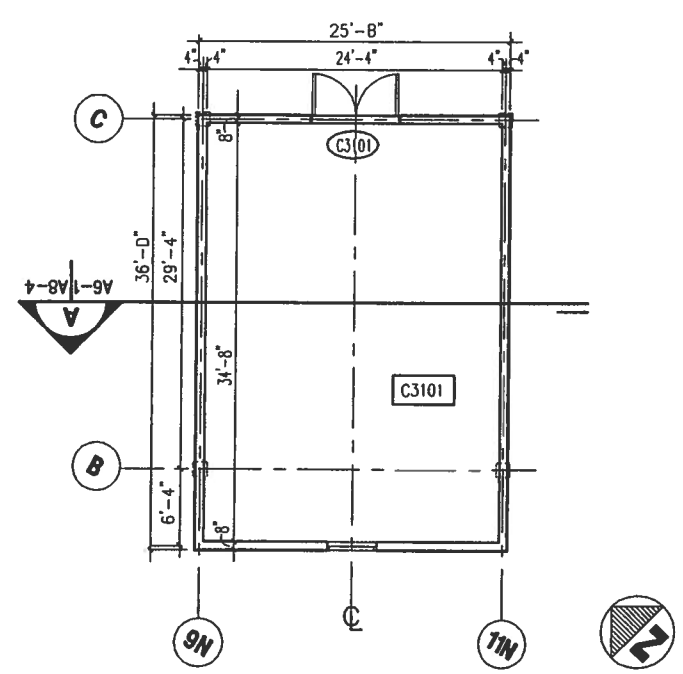

MECHANICAL PENTHOUSE PLAN (LSP4)

SCALE: 1/8" = 1'-0"

A2-4 | A6-1

GRAPHIC SCALE 1/8"=1'-0"

SHERLOCK, SMITH & ADAMS, INC.
ARCHITECTS – ENGINEERS
MONTGOMERY, ALABAMA

U.S. NAVAL STATION ROOSEVELT ROADS, P.R.
REPAIRS TO NAVAL HOSPITAL
LARGE SCALE PLANS

CONSTR. CONTR. NO.	SPECIFICATION NO.	NAVFAC DRWG. NO.	TF NO XXXXX
XXXXX	XXXXX	XXXXX	SHEET ? OF ??

SEAL AREA

ENG. DIV. DIR.: DATE: SATISFACTORY TO: DATE:

DATE	REVISION DESCRIPTION

NAVAL FACILITIES ENGINEERING COMMAND
DEPARTMENT OF THE NAVY
NAVY PUBLIC WORKS CENTER, JACKSONVILLE, FL
U.S. NAVAL STATION ROOSEVELT ROADS, P.R.
REPAIRS TO NAVAL HOSPITAL
LARGE SCALE PLANS

PLATE NO. A6-1

PWC # XXXXX

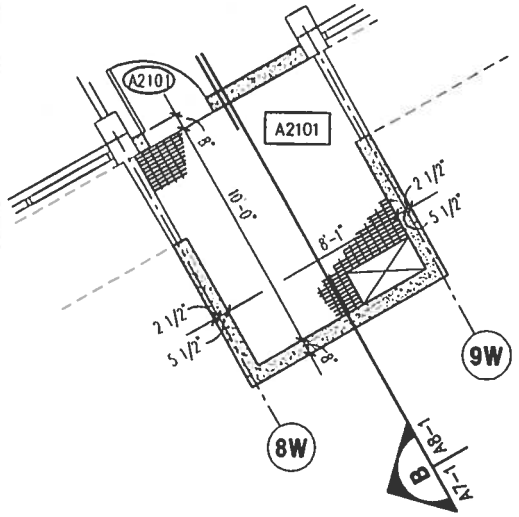

2ND FLOOR LEVEL
SCALE: 1/4" = 1'-0"
LSP3 A2-3 | A7-1

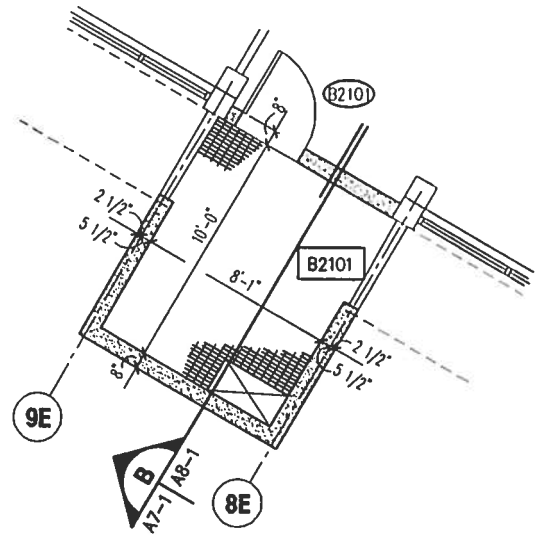

2ND FLOOR LEVEL
SCALE: 1/4" = 1'-0"
LSP6 A2-3 | A7-1

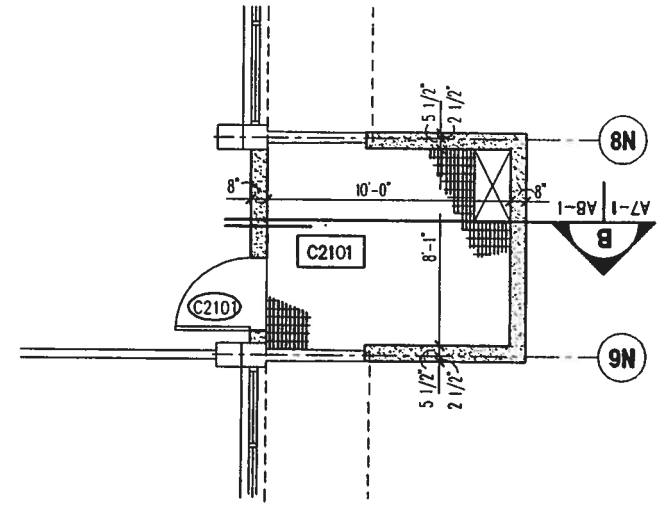

2ND FLOOR LEVEL
SCALE: 1/4" = 1'-0"
LSP9 A2-3 | A7-1

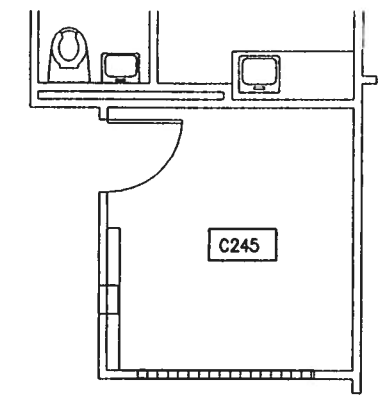

2ND FLOOR LEVEL
SCALE: 1/4" = 1'-0"
LSP12 A2-3 | A7-1

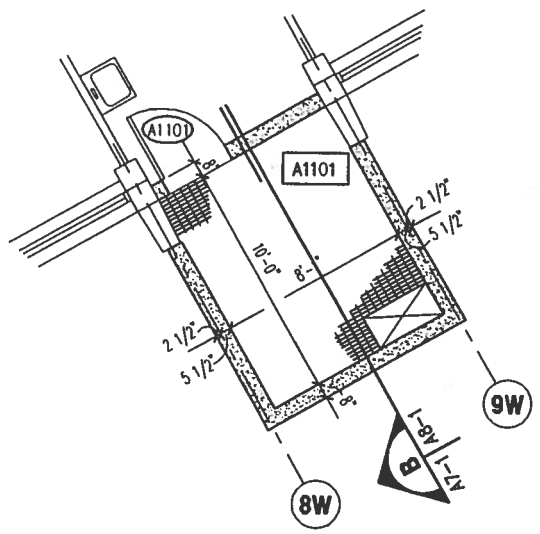

1ST FLOOR LEVEL
SCALE: 1/4" = 1'-0"
LSP2 A2-2 | A7-1

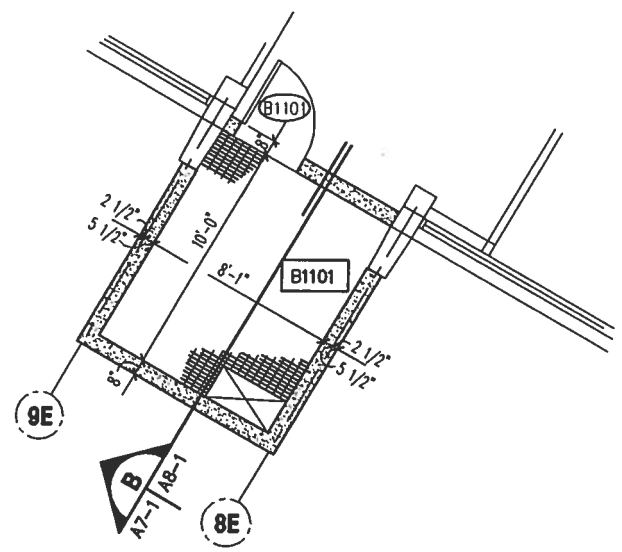

1ST FLOOR LEVEL
SCALE: 1/4" = 1'-0"
LSP5 A2-2 | A7-1

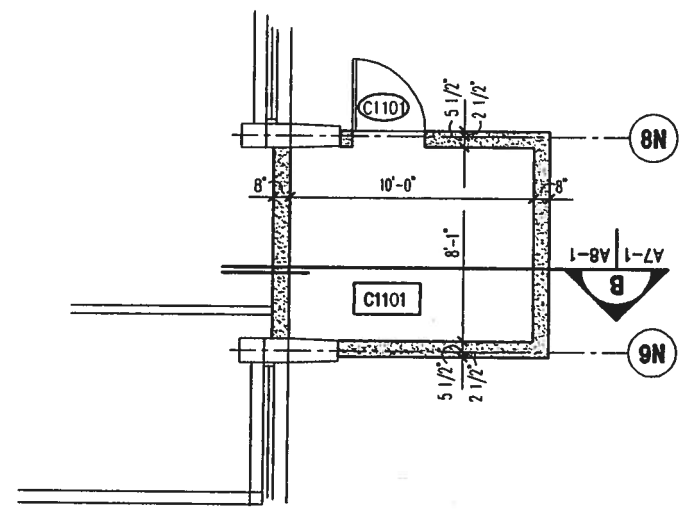

1st FLOOR LEVEL
SCALE: 1/4" = 1'-0"
LSP8 A2-2 | A7-1

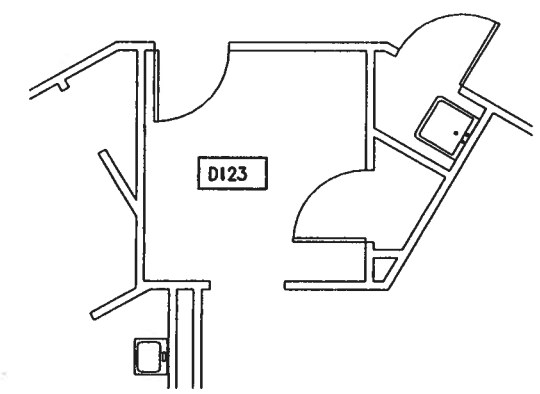

1ST FLOOR LEVEL
SCALE: 1/4" = 1'-0"
LSP11 A2-2 | A7-1

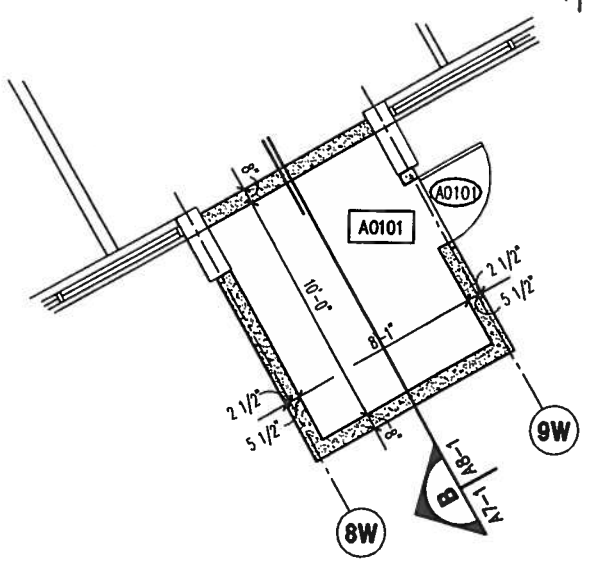

BASEMENT LEVEL
SCALE: 1/4" = 1'-0"
LSP1 A2-1 | A7-1

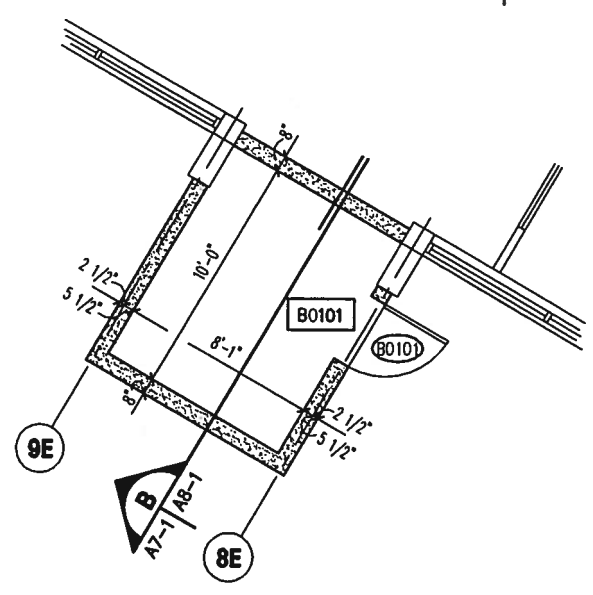

BASEMENT LEVEL
SCALE: 1/4" = 1'-0"
LSP4 A2-1 | A7-1

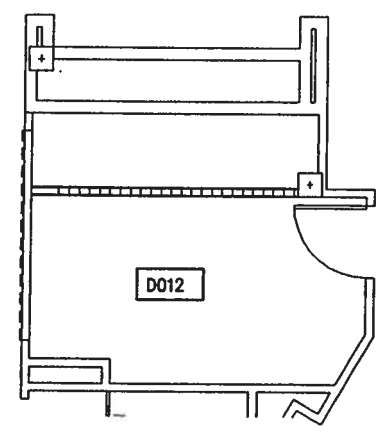

BASEMENT LEVEL
SCALE: 1/4" = 1'-0"
LSP7 A2-1 | A7-1

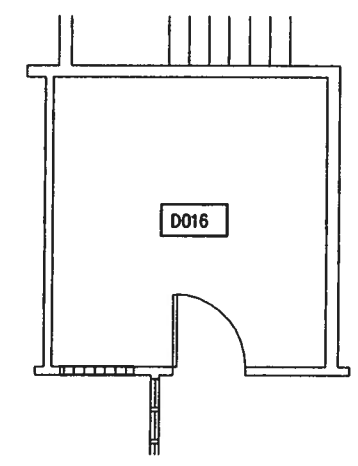

BASEMENT LEVEL
SCALE: 1/4" = 1'-0"
LSP10 A2-1 | A7-1

0 5 10 15
GRAPHIC SCALE
1/4"=1'-0"

SHERLOCK, SMITH & ADAMS, INC.
ARCHITECTS – ENGINEERS
MONTGOMERY, ALABAMA

U.S. NAVAL STATION ROOSEVELT ROADS, P.R.
REPAIRS TO NAVAL HOSPITAL
LARGE SCALE PLANS

CONSTR. CONTR. NO.	SPECIFICATION NO.	NAVFAC DRWG. NO.	TF NO. XXXXX
XXXXX	XXXXX	XXXXX	SHEET ? OF ??

SEAL AREA

ENG. DIV. DIR.: DATE:
SATISFACTORY TO: DATE:

REVISION DESCRIPTION	DATE

DEPARTMENT OF THE NAVY
NAVAL FACILITIES ENGINEERING COMMAND
NAVY PUBLIC WORKS CENTER, JACKSONVILLE, FL
U.S. NAVAL STATION ROOSEVELT ROADS, P.R.
REPAIRS TO NAVAL HOSPITAL
LARGE SCALE PLANS

PLATE NO.
A7-1

PWC # xxxxx

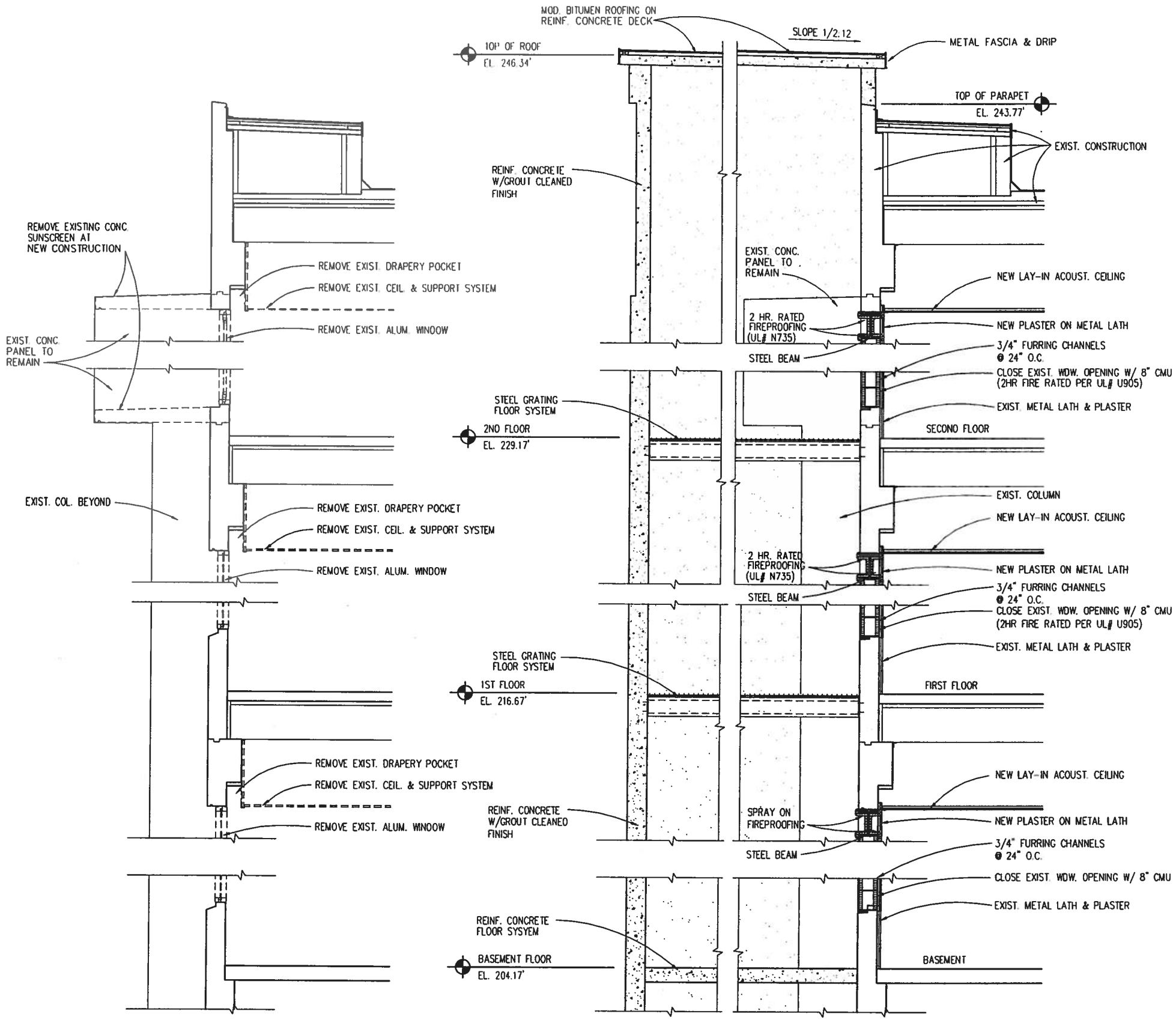

SECTION A
SCALE: 1/2" = 1'-0"
A4-1 | A8-1

SECTION B
SCALE: 1/2" = 1'-0"
A4-1 | A8-1
A7-1

0 1' 2' 3' 4' 5' 6' 7'
GRAPHIC SCALE
1/2"=1'-0"

SHERLOCK, SMITH & ADAMS, INC.
ARCHITECTS - ENGINEERS
MONTGOMERY, ALABAMA

U.S. NAVAL STATION — ROOSEVELT ROADS, P.R.
REPAIRS TO NAVAL HOSPITAL
SECTIONS & DETAILS

CONSTR. CONTR. NO.	SPECIFICATION NO.	NAVFAC DRWG. NO.	TF NO. XXXXX
XXXXX	XXXXX	XXXXX	SHEET ? OF ??

SEAL AREA

ENG. DIV. DIR.: DATE
SATISFACTORY TO: DATE:
DESIGN BY: RAS DRAWN BY: FLT

REVISION DESCRIPTION — DATE

DEPARTMENT OF THE NAVY — NAVAL FACILITIES ENGINEERING COMMAND
NAVY PUBLIC WORKS CENTER, JACKSONVILLE, FL
U.S. NAVAL STATION — ROOSEVELT ROADS, P.R.
REPAIRS TO NAVAL HOSPITAL
SECTIONS & DETAILS

PLATE NO.
A8-1

PWC # XXXXX

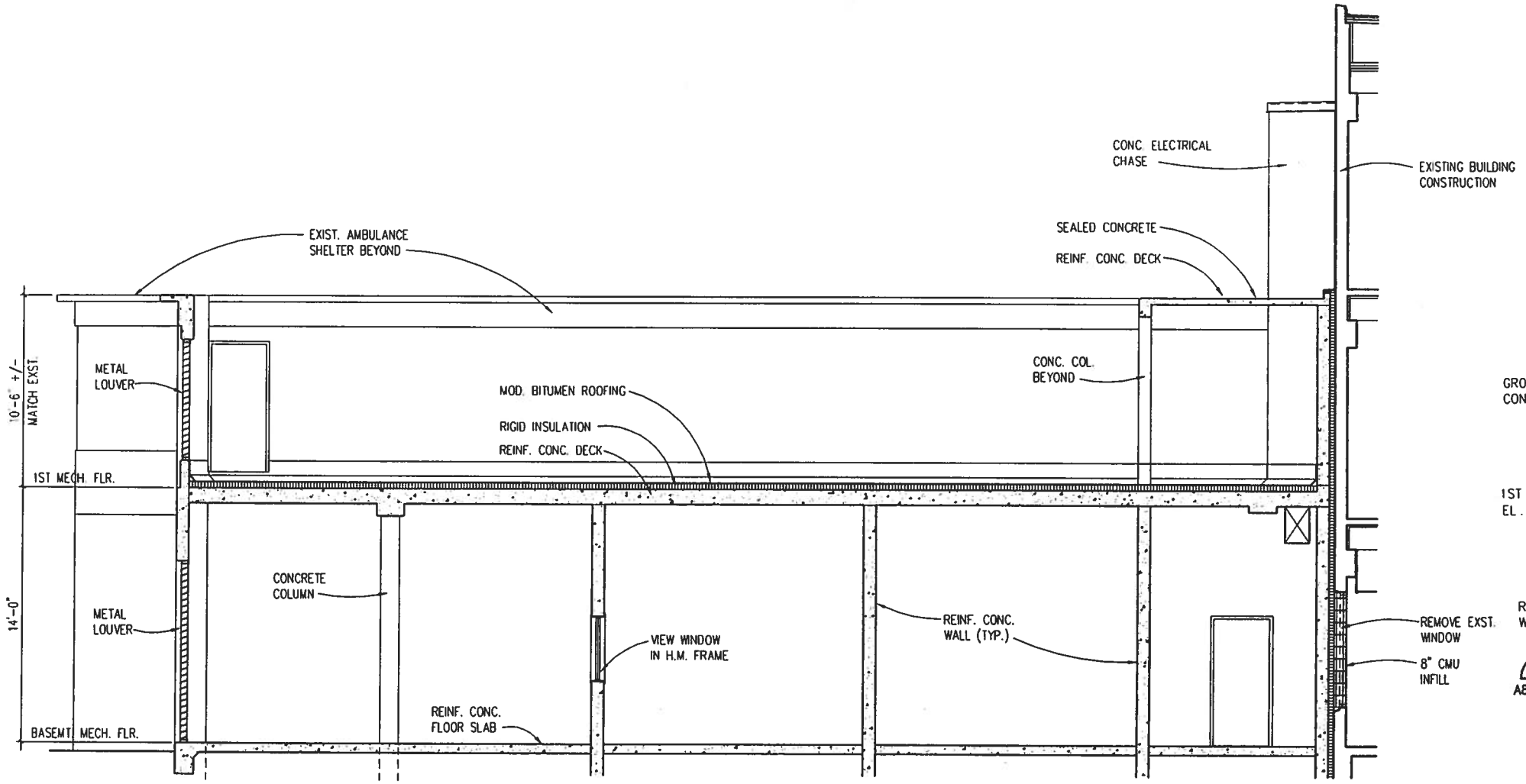

SECTION A
SCALE: 1/4" = 1'-0"
A4-2 | A8-2
A6-1

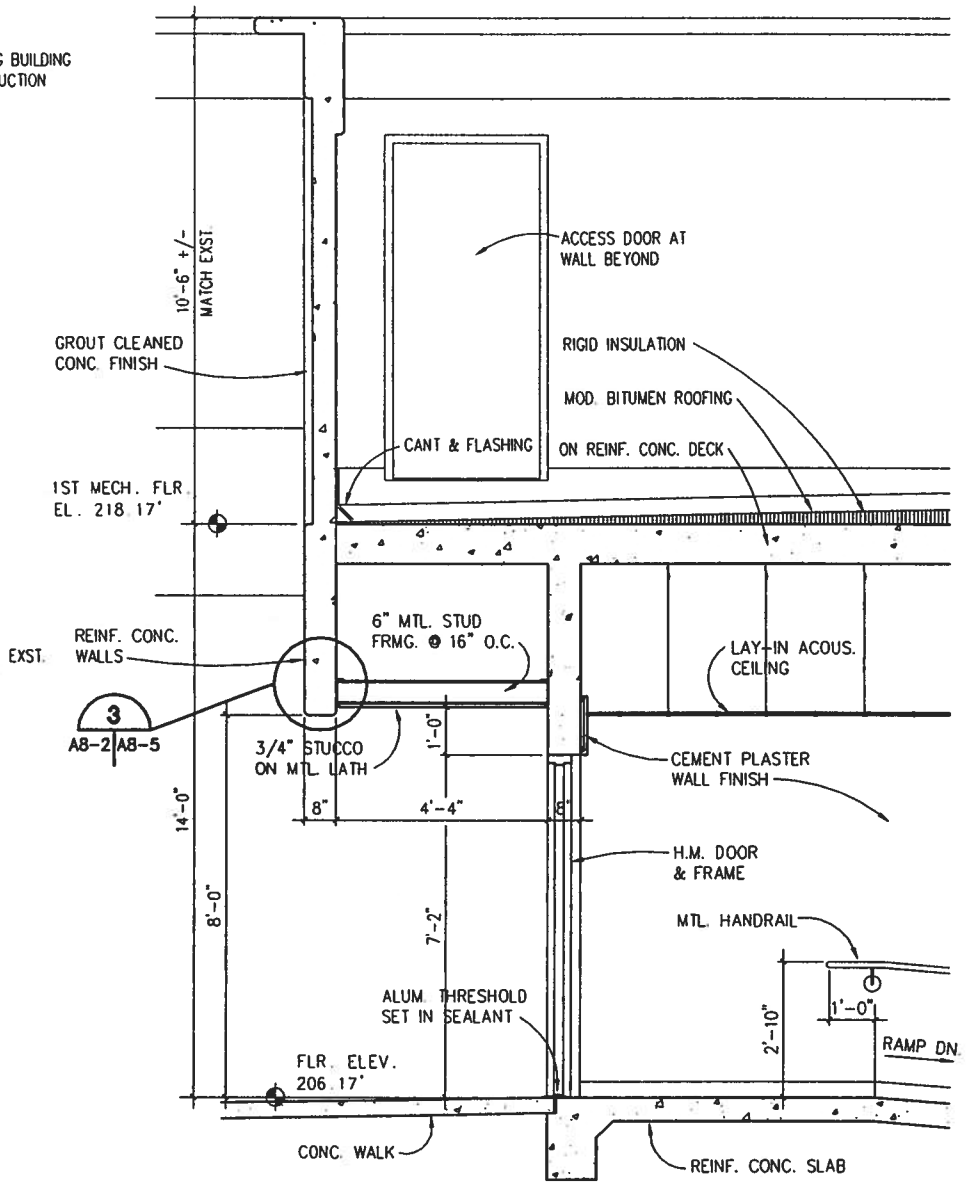

SECTION C
SCALE: 1/2" = 1'-0"
A6-1 | A8-2

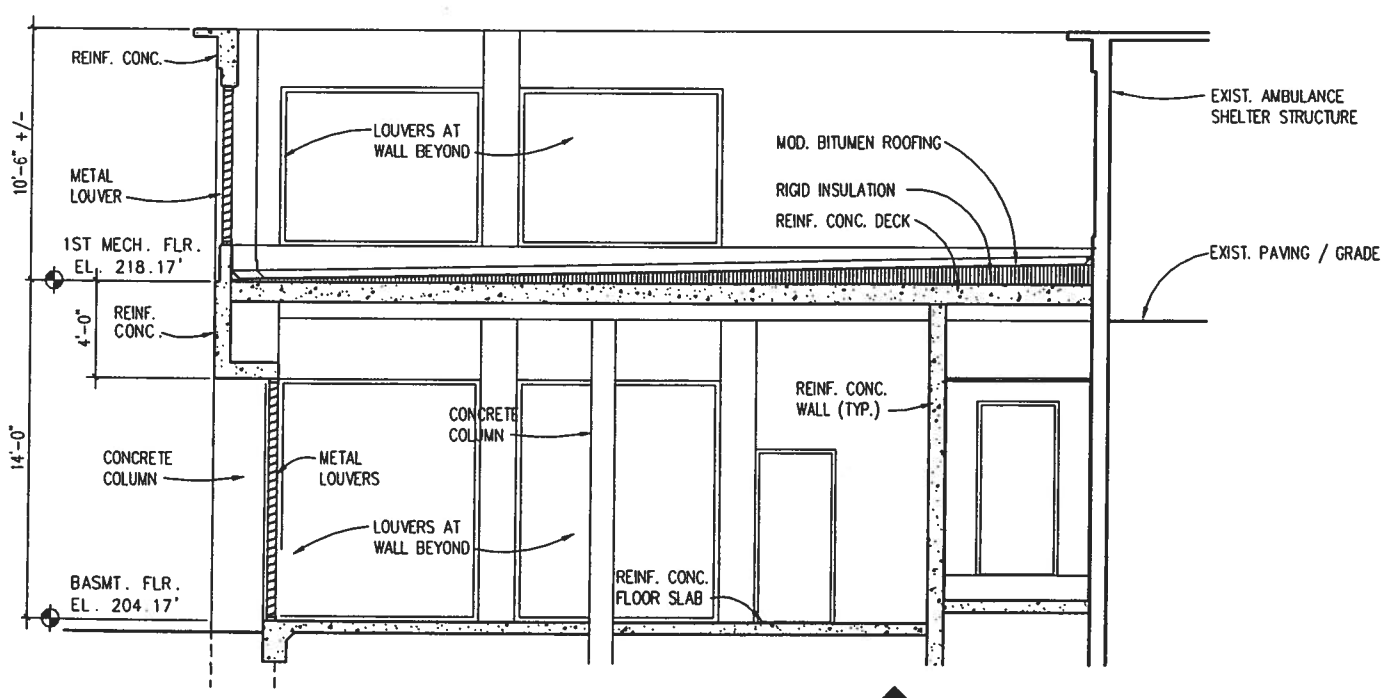

SECTION B
SCALE: 1/4" = 1'-0"
A4-2 | A8-2
A6-1

0 1' 2' 3' 4' 5' 6' 7'
GRAPHIC SCALE
1/2"=1'-0"

0 5 10 15
GRAPHIC SCALE
1/4"=1'-0"

SHERLOCK, SMITH & ADAMS, INC.
ARCHITECTS - ENGINEERS
MONTGOMERY, ALABAMA

U.S. NAVAL STATION ROOSEVELT ROADS, P.R.
REPAIRS TO NAVAL HOSPITAL
SECTIONS & DETAILS

CONSTR. CONTR. NO.	SPECIFICATION NO.	NAVFAC DRWG. NO.	TF NO. XXXXX
XXXXX	XXXXX	XXXXX	SHEET ? OF ??

PLATE NO.
A8-2

SEAL AREA

ENG. DIV. DIR.: DATE:
SATISFACTORY TO: DATE:

DATE	REVISION DESCRIPTION

NAVAL FACILITIES ENGINEERING COMMAND
DEPARTMENT OF THE NAVY
NAVY PUBLIC WORKS CENTER, JACKSONVILLE, FL
U.S. NAVAL STATION ROOSEVELT ROADS, P.R.
REPAIRS TO NAVAL HOSPITAL
SECTIONS & DETAILS

PWC # XXXXX

FINISH SCHEDULE

ROOM NO.	ROOM NAME	FLOOR EXIST.	FLOOR NEW	BASE EXIST.	BASE NEW	WALLS NORTH EXIST.	WALLS NORTH NEW	WALLS EAST EXIST.	WALLS EAST NEW	WALLS SOUTH EXIST.	WALLS SOUTH NEW	WALLS WEST EXIST.	WALLS WEST NEW	CEILINGS MATERIAL EXIST.	CEILINGS MATERIAL NEW	CEILINGS HGT. EXIST.	CEILINGS HGT. NEW	REMARKS
A01	CORRIDOR	CP	—	RB	—	PVF	—	PVF	—	PVF	—	PVF	—	AT-A	NOTE #1	8'-0"	—	
A02	CORRIDOR	CP	—	RB	—	GVF	—	PVF	—	PVF	—	PVF	—	AT-A	NOTE #1	8'-0"	—	
A03	CORRIDOR	CP	—	RB	—	GVF	—	PVF	—	PVF	—	PVF	—	AT-A	NOTE #1	8'-0"	—	
A04	VESTIBULE	VT-1	—	RB	—	GVF	—	PVF	—	PVF	—	PVF	—	ASP	AT-A	8'-6"	8'-0"	
A08	C.O. OFFICE	CP	—	CT	—	PPT	—	PPT	—	PPT	—	PPT	—	ASP	—	8'-6"	—	
A08B	TOILET	CT	—	RB	—	PLG	—	PLG	—	PLG	—	PLG	—	PPT	—	8'-6"	—	
A025	OFFICE	CP	—	RB	SPM	PPT	SPT	PPT	SPT	PPT	SPT	PPT	SPT	ASP	AT-1	8'-6"	8'-6"	
A026	MED. LIBRARY	CP	—	RB	—	PPT	—	PPT	—	PPT	—	PPT	—	ASP	AT-1	8'-6"	8'-6"	
A0101	ELECTRICAL ROOM	—	CCS	—	—	—	CPT	—	CPT	—	CPT	—	CPT	—	CPT	—	13'-4"	
A0102	GENERATOR ROOM	—	CCS	—	—	—	CPT	—	CPT	—	CPT	—	CPT	—	CPT	—	13'-4"	
A0103	SWITCHGEAR ROOM	—	CCS	—	—	—	CPT	—	CPT	—	CPT	—	CPT	—	CPT	—	13'-4"	
A0104	SWITCHGEAR ROOM	—	CCS	—	—	—	CPT	—	CPT	—	CPT	—	CPT	—	CPT	—	13'-4"	
A0105	SWITCHBOARD ROOM	—	CCS	—	—	—	CPT	—	CPT	—	CPT	—	CPT	—	CPT	—	13'-4"	
A0106	CORRIDOR	—	VT-2	—	RB	—	PPT	—	PPT	—	PPT	—	PPT	—	AT-1	—	8'-0"	
B01	CORRIDOR	VT-1	—	RB	—	PPT	—	PPT	—	PPT	—	PPT	—	ACT-B	NOTE #1	8'-0"	—	
B010	KITCHEN	QT	—	QT	SPM	PLG	—	PLG	—	PLG	SPT	PLG	—	MSP	NOTE #2	8'-6"	—	
B0101	ELECTRICAL ROOM	—	CCS	—	—	—	CPT	—	CPT			—	CPT	—	CPT	—	—	
C01	CORRIDOR	VT-1	—	RB	—	PVF	—	PVF	—	PVF	—	PVF	—	AT-A	AT-1	8'-0"	8'-0"	
D01	ELEVATOR LOBBY	VT-1	—	RB	—	PVF	—	PVF	—	PVF	—	PVF	—	AT-B	NOTE #1	8'-0"	—	
D02	ELEVATOR LOBBY	VT-1	—	RB	—	PPT	—	PPT	—	PPT	—	PPT	—	PSP	AT-1	8'-0"	8'-0"	
D03	CORRIDOR	VT-1	—	RB	—	PPT	—	PPT	—	PPT	—	PPT	—	PSP	AT-1	8'-0"	8'-0"	
D04	LOBBY	VT-1	—	RB	—	PPT	—	PPT	—	PPT	—	PPT	—	PSP	AT-1	8'-0"	8'-0"	
D05	CORRIDOR	VT-1	—	RB	—	PVF	—	PVF	—	PVF	—	PVF	—	AT-B	NOTE #1	8'-0"	8'-0"	
D012	MECHANICAL ROOM	VT-1	CPT	RB	—	PPT	PPT	PPT	PPT	PPT	PPT	PPT	PPT	ASP	EXP	8'-0"	—	
D016	ELECTRICAL ROOM	CP	VT-2	RB	RB	PPT	PPT	PPT	PPT	PPT	PPT	PPT	PPT	ASP	AT-1	8'-0"	8'-0"	
A101	CORRIDOR	VT-1	—	RB	—	PVF	—	PVF	—	PVF	—	PVF	—	AT-A	NOTE #1	8'-0"	—	
A101C	SCREENING	VT-1	—	RB	—	PVF	—	PVF	—	PVF	—	PVF	—	AT-A	NOTE #1	8'-0"	—	
A102	CORRIDOR	VT-1	—	RB	—	PVF	—	PVF	—	PVF	—	PVF	—	AT-A	NOTE #1	8'-0"	—	
A104	CORRIDOR	VT-1	—	RB	—	PVF	—	PVF	—	PVF	—	PVF	—	AT-A	NOTE #1	8'-0"	—	
A105	CORRIDOR	VT-1	—	RB	—	PVF	—	PVF	—	PVF	—	PVF	—	AT-A	NOTE #1	8'-0"	—	
A119	EXAM	VT-1	—	RB	—	PPT	—	PPT	—	PPT	—	PPT	—	ASP	ACT-1	8'-0"	8'-0"	
A140	EXAM	VT-1	—	RB	—	PPT	—	PPT	SPT	PPT	—	PPT	—	ASP	ACT-1	8'-6"	8'-6"	
A1101	ELECTRICAL ROOM	—	CCS	—	RB	—	CPT	—	CPT	—	CPT	—	CPT	—	CPT	—	—	
B101	CORRIDOR	VT-1	—	RB	—	PVF	—	PVF	—	PVF	—	PVF	—	AT-A	NOTE #1	8'-0"	—	
B101A	CORRIDOR	VT-1	—	RB	—	PVF	—	PVF	—	PVF	—	PVF	—	AT-A	NOTE #1	8'-6"	—	
B102	CORRIDOR	VT-1	—	RB	—	PVF	—	PVF	—	PVF	—	PVF	—	AT-A	NOTE #1	8'-0"	—	
B102A	WAITING	VT-1	—	RB	—	PVF	—	PVF	—	PVF	—	PVF	—	AT-A	NOTE #1	8'-6"	—	
B102C	PATIENT HOLDING	VT-1	—	RB	—	PVF	—	PVF	—	PVF	—	PVF	—	AT-A	NOTE #1	8'-6"	—	
B102D	BARIUM	VT-1	—	RB	—	PVF	—	PVF	—	PVF	—	PVF	—	AT-A	NOTE #1	8'-0"	—	
B151	DOCTOR'S OFFICE	VT-1	—	RB	SPM	PPT	SPT	PPT	SPT	PPT	SPT	PPT	SPT	ASP	AT-1	8'-6"	8'-6"	
B152	LAB	CT	—	CT	—	PLG	—	PLG	—	PLG	—	PLG	—	PPT	AT-1	8'-0"	8'-0"	
B153	LPO OFFICE	CT	—	CT	—	PLG	—	PLG	—	PLG	—	PLG	—	PPT	AT-1	8'-0"	8'-0"	
B1101	ELECTRICAL ROOM	—	CCS	—	RB	—	CPT	—	CPT	—	CPT	—	CPT	—	CPT	—	—	
C101	CORRIDOR	VT-1	—	RB	—	PVF	—	PVF	—	PVF	—	PVF	—	AT-A	NOTE #1	8'-0"	—	

FINISH LEGEND

AT-A	ACOUSTICAL TILE CEILING (EXISTING 2X4)
AT-1	ACOUSTICAL TILE CEILING (2X2 STANDARD FINISH)
AT-2	ACOUSTICAL TILE CEILING (2X2 WATER PROOF FINISH)
ASP	ACOUSTICAL CONCEALED SPLINE CEILING
MSP	METAL CONCEALED SPLINE CEILING
PPT	PLASTER PAINTED
PSP	PLASTER SPRAYED TEXTURED FINISH
PLG	PLASTER LIQUID GLAZED COATING
GPT	GYPSUM WALL BOARD PAINTED
GLG	GYPSUM WALL BOARE LIQUID GLAZED COATING
CPT	CONCRETE PAINTED
CCS	CONCRETE WITH CONCRETE SEALER
CT	CERAMIC TILE
PVF	PLASTER WITH VINYL WALL FABRIC
GVF	GYPSUM WALL BOARD W/ VINYL WALL FABRIC
QT	QUARRY TILE
CP	CARPET
VT-1	VINYL ASBESTOS TILE
VT-2	VINYL COMPOSITION TILE
SV	SHEET VINYL
EP	EPOXY TERRAZZO
SPCF	CONDUCTIVE FLOORING
SPT	PATCH & PAINT TO MATCH EXISTING
SPM	PATCH TO MATCH EXISTING
RB	RESILIENT BASE
EXP	EXPOSED STRUCTURE

NOTE #1 REMOVE EXISTING LAY-IN ACOUSTICAL CEILING SYSTEM TO EXTENT REQUIRED TO ACCOMPLISH WORK ABOVE CEILING. (STORE MATERIALS AND RE-INSTALL EXISTING CEILING SYSTEM)

NOTE #2 REMOVE EXISTING METAL CONCEALED SPLINE CEILING TO EXTENT REQUIRED TO ACCOMPLISH WORK ABOVE CEILING. (STORE MATERIALS AND RE-INSTALL EXISTING CEILING SYSTEM)

SEAL AREA

ENG. DIV. DIR.: DATE:
SATISFACTORY TO: DATE:

DATE	REVISION DESCRIPTION

NAVAL FACILITIES ENGINEERING COMMAND
DEPARTMENT OF THE NAVY
NAVY PUBLIC WORKS CENTER, JACKSONVILLE, FL
U.S. NAVAL STATION ROOSEVELT ROADS, P.R.
REPAIRS TO NAVAL HOSPITAL
FINISH SCHEDULE

SHERLOCK, SMITH & ADAMS, INC.
ARCHITECTS – ENGINEERS
MONTGOMERY, ALABAMA

U.S. NAVAL STATION ROOSEVELT ROADS, P.R.
REPAIRS TO NAVAL HOSPITAL
FINISH SCHEDULE

CONSTR. CONTR. NO. XXXXX | SPECIFICATION NO. XXXXX | NAVFAC DRWG. NO. XXXXX | TF NO. XXXXX | SHEET ? OF ??

PLATE NO. A3-1

PWC # XXXXX

FINISH SCHEDULE

ROOM NO.	ROOM NAME	FLOOR		BASE		WALLS NORTH		WALLS EAST		WALLS SOUTH		WALLS WEST		CEILINGS MATERIAL		CEILINGS HGT.		REMARKS
		EXIST.	NEW	EXIST.	NEW	EXIST.	NEW	EXIST.	NEW	EXIST.	NEW	EXIST.	NEW	EXIST.	NEW	EXIST.	NEW	
C102	CORRIDOR	VT-1	—	RB	—	PVF	—	PVF	—	PVF	—	PVF	—	AT-A	NOTE #1	8'-0"	—	
C102A	VENDING	VT-1	—	RB	—	PVF	—	PVF	—	PVF	—	PVF	—	AT-A	NOTE #1	8'-0"	—	
C102C	INTERNAL MED. WAITING	VT-1	—	RB	—	PVF	—	PVF	—	PVF	—	PVF	—	AT-A	NOTE #1	8'-0"	—	
C103	CORRIDOR	VT-1	—	RB	—	PVF	—	PVF	—	PVF	—	PVF	—	AT-A	NOTE #1	8'-0"	—	
C105	CORRIDOR	VT-1	—	RB	—	PVF	—	PVF	—	PVF	—	PVF	—	AT-A	NOTE #1	8'-0"	—	
C161	EXAM	VT-1	—	RB	SPM	PPT	SPT	PPT	SPT	PPT	SPT	PPT	SPT	ASP	AT-1	8'-6"	8'-6"	
C162	STORAGE	CT	—	CT	—	PLG	—	PLG	—	PLG	—	PLG	—	PPT	AT-1	8'-0"	8'-0"	
C163	EXAM	VT-1	—	RB	SPM	PPT	SPT	PPT	SPT	PPT	SPT	PPT	SPT	ASP	AT-1	8'-6"	8'-6"	
C1101	ELECTRICAL ROOM	—	CCS	—	RB	—	CPT	—	CPT	—	CPT	—	CPT	—	CPT	—	—	
D101A	CORRIDOR	ET	—	ET	—	PVF	—	PVF	—	PVF	—	PVF	—	PSP	AT-1	8'-0"	8'-0"	
D102A	CORRIDOR	ET	—	ET	—	PVF	—	PVF	—	PVF	—	PVF	—	PSP	AT-1	8'-0"	8'-0"	
D102B	CORRIDOR	ET	—	ET	—	PVF	—	PVF	—	PVF	—	PVF	—	PSP	AT-1	8'-0"	8'-0"	
D103A	CORRIDOR	ET	—	ET	—	PVF	—	PVF	—	PVF	—	PVF	—	PSP	AT-1	8'-0"	8'-0"	
D103B	CORRIDOR	ET	—	ET	—	PVF	—	PVF	—	PVF	—	PVF	—	PSP	AT-1	8'-0"	8'-0"	
D104	CORRIDOR	VT-1	—	RB	—	PVF	—	PVF	—	PVF	—	PVF	—	AT-A	AT-1	8'-0"	8'-0"	
D105	CORRIDOR	VT-1	—	RB	—	PVF	—	PVF	—	PVF	—	PVF	—	PSP	AT-1	8'-0"	8'-0"	
D106	ELEVATOR LOBBY	VT-1	—	RB	—	PVF	—	PVF	—	PVF	—	PVF	—	PSP	AT-1	8'-0"	8'-0"	
D123	ELECTRICAL ROOM	CP	VT-2	RB	RB	PPT	PPT	PPT	PPT	PPT	PPT	PPT	PPT	ASP	EXP	8'-0"	—	
A201	CORRIDOR	VAT	—	RB	—	PVF	—	PVF	—	PVF	—	PVF	—	AT-A	NOTE #1	8'-0"	—	
A202	CORRIDOR	VAT	—	RB	—	PVF	—	PVF	—	PVF	—	PVF	—	AT-A	NOTE #1	8'-0"	—	
A202A	NURSES STATION	VAT	—	RB	—	PVF	—	PVF	—	PVF	—	PVF	—	AT-A	NOTE #1	8'-0"	—	
A203	CORRIDOR	SPCF	—	SPCF	—	PLG	—	PLG	—	PLG	—	PLG	—	AT-A	NOTE #1	8'-0"	—	
A205	CORRIDOR	VAT	—	RB	—	PVF	—	PVF	—	PVF	—	PVF	—	AT-A	NOTE #1	8'-0"	—	
A206	CORRIDOR	VAT	—	RB	—	PVF	—	PVF	—	PVF	—	PVF	—	AT-A	NOTE #1	8'-0"	—	
A208	1-BED ROOM	VAT	—	RB	—	PPT	—	PPT	—	PPT	—	PPT	SPT	AT-A	AT-1	8'-6"	8'-6"	
A211	LPO/GYN OFFICE	VAT	—	RB	—	PPT	—	PPT	—	PPT	SPT	PPT	—	ASP	AT-1	8'-6"	8'-6"	
A212	OFFICE/EXAM	VT-1	—	RB	—	PPT	—	PPT	—	PPT	—	PPT	SPT	ASP	AT-1	8'-6"	8'-6"	
A213	OFFICE/EXAM	VT-1	—	RB	—	PPT	—	PPT	SPT	PPT	—	PPT	SPT	ASP	AT-1	8'-6"	8'-6"	
A219	1-BED ROOM	VT-1	—	RB	—	PPT	—	PPT	—	PPT	—	PPT	SPT	ASP	AT-1	8'-6"	8'-6"	
A220	2-BED ROOM	VT-1	—	RB	—	PPT	—	PPT	—	PPT	—	PPT	SPT	ASP	AT-1	8'-6"	8'-6"	
A221	2-BED ROOM	VT-1	—	RB	—	PPT	—	PPT	SPT	PPT	—	PPT	—	ASP	AT-1	8'-6"	8'-6"	
A223	OB/GYN CLINIC WAIT.	VT-1	—	RB	—	PPT	—	PPT	SPT	PPT	—	PPT	—	ASP	AT-1	8'-6"	8'-6"	
A225	OFFICE/EXAM	VT-1	—	RB	—	PPT	—	PPT	SPT	PPT	—	PPT	SPT	ASP	AT-1	8'-6"	8'-6"	
A230	4-BED ROOM	VT-1	—	RB	—	PPT	—	PPT	SPT	PPT	—	PPT	SPT	ASP	AT-1	8'-6"	8'-6"	
A231	WORK AREA	VT-1	—	RB	—	PPT	—	PPT	—	PPT	—	PPT	—	ASP	AT-2	8'-6"	8'-6"	
A232	PASSAGE	VT-1	—	RB	—	PPT	—	PPT	—	PPT	—	PPT	—	ASP	AT-2	8'-6"	8'-6"	
A234	FORM ROOM	VT-1	—	RB	—	PPT	—	PPT	—	PPT	—	PPT	—	PPT	AT-2	8'-0"	7'-10"	
A236	FULL TERM NURSERY	VT-1	—	RB	—	PPT	—	PPT	—	PPT	—	PPT	—	ASP	AT-2	8'-0"	8'-0"	
A241	PATIENT INTERVIEW	VT-1	—	RB	—	PPT	—	PPT	—	PPT	—	PPT	—	ASP	AT-1	8'-6"	8'-6"	
A242	SHOWER	CT	—	CT	—	PLG	PLG	PLG	PLG	PLG	PLG	PLG	PLG	PPT	AT-2	8'-0"	7'-10"	* CT WALLS @ SHOWER
A243	4-BED ROOM	VT-1	—	RB	SPM	PPT	SPT	PPT	SPT	PPT	SPT	PPT	SPT	ASP	AT-1	8'-6"	8'-6"	
A244	1-BED ROOM	VT-1	—	RB	—	PPT	—	PPT	SPT	PPT	—	PPT	—	ASP	AT-1	8'-6"	8'-6"	
A246	PREMY. NURSERY	VT-1	—	RB	—	PPT	—	PPT	—	PPT	—	PPT	—	ASP	AT-2	8'-0"	8'-0"	
A247	ISOLATION	VT-1	—	RB	—	PPT	—	PPT	—	PPT	—	PPT	—	PPT	AT-2	8'-6"	8'-4"	
A248	WORK ROOM	VT-1	—	RB	—	PPT	—	PPT	—	PPT	—	PPT	—	PPT	AT-2	8'-6"	8'-4"	
A249	PASSAGE	SPCF	—	SPCF	—	PLG	—	PLG	—	PLG	—	PLG	—	ASP	AT-2	8'-6"	8'-6"	
A250	DELIVERY NO. 2	SPCF	—	SPCF	—	PLG	SPT	PLG	SPT	PLG	SPT	PLG	SPT	PPT	PPT	8'-8"	8'-8"	
A251	STORAGE	SPCF	—	SPCF	—	PLG	—	PLG	—	PLG	—	PLG	—	PLG	AT-1	8'-0"	7'-10"	

FINISH LEGEND

AT-A	ACOUSTICAL TILE CEILING (EXISTING 2X4)
AT-1	ACOUSTICAL TILE CEILING (2X2 STANDARD FINISH)
AT-2	ACOUSTICAL TILE CEILING (2X2 WATER PROOF FINISH)
ASP	ACOUSTICAL CONCEALED SPLINE CEILING
MSP	METAL CONCEALED SPLINE CEILING
PPT	PLASTER PAINTED
PSP	PLASTER SPRAYED TEXTURED FINISH
PLG	PLASTER LIQUID GLAZED COATING
GPT	GYPSUM WALL BOARD PAINTED
GLG	GYPSUM WALL BOARD LIQUID GLAZED COATING
CPT	CONCRETE PAINTED
CCS	CONCRETE WITH CONCRETE SEALER
CT	CERAMIC TILE
PVF	PLASTER WITH VINYL WALL FABRIC
GVF	GYPSUM WALL BOARD W/ VINYL WALL FABRIC
QT	QUARRY TILE
CP	CARPET
VT-1	VINYL ASBESTOS TILE
VT-2	VINYL COMPOSITION TILE
SV	SHEET VINYL
EP	EPOXY TERRAZZO
SPCF	CONDUCTIVE FLOORING
SPT	PATCH & PAINT TO MATCH EXISTING
SPM	PATCH TO MATCH EXISTING
RB	RESILIENT BASE
EXP	EXPOSED STRUCTURE

NOTE #1 — REMOVE EXISTING LAY-IN ACOUSTICAL CEILING SYSTEM TO EXTENT REQUIRED TO ACCOMPLISH WORK ABOVE CEILING. (STORE MATERIALS AND RE-INSTALL EXISTING CEILING SYSTEM)

NOTE #2 — REMOVE EXISTING METAL CONCEALED SPLINE CEILING TO EXTENT REQUIRED TO ACCOMPLISH WORK ABOVE CEILING. (STORE MATERIALS AND RE-INSTALL EXISTING CEILING SYSTEM)

SHERLOCK, SMITH & ADAMS, INC.
ARCHITECTS — ENGINEERS
MONTGOMERY, ALABAMA

U.S. NAVAL STATION ROOSEVELT ROADS, P.R.
REPAIRS TO NAVAL HOSPITAL
FINISH SCHEDULE

CONSTR. CONTR. NO. XXXXX | SPECIFICATION NO. XXXXX | NAVFAC DRWG. NO. XXXXX | TF NO. XXXXX | SHEET ? OF ??

DRAWN BY: RJ&S | DESIGN BY: RJ&S | ENG. DIV. DIR.: | DATE: | SATISFACTORY TO: | DATE:

REVISION DESCRIPTION | DATE

NAVAL FACILITIES ENGINEERING COMMAND
DEPARTMENT OF THE NAVY
NAVY PUBLIC WORKS CENTER, JACKSONVILLE, FL
ROOSEVELT ROADS, P.R.
U.S. NAVAL STATION
REPAIRS TO NAVAL HOSPITAL
FINISH SCHEDULE

PLATE NO. A3-2

PWC # XXXXX

FINISH SCHEDULE

ROOM NO.	ROOM NAME	FLOOR		BASE		WALLS								CEILINGS				REMARKS
						NORTH		EAST		SOUTH		WEST		MATERIAL		HGT.		
		EXIST.	NEW	EXIST.	NEW	EXIST.	NEW	EXIST.	NEW	EXIST.	NEW	EXIST.	NEW	EXIST.	NEW	EXIST.	NEW	
A253	RECOVERY	SPCF	—	SPCF	—	PLG	—	PLG	—	PLG	—	PLG	—	PLG	AT-1	8'-0"	7'-10"	
A254	STORAGE	VT-1	—	RB	—	PPT	—	PPT	—	PPT	—	PPT	—	PLG	AT-1	8'-0"	7'-10"	
A255	STAFF LOUNGE	VT-1	—	RB	—	PPT	—	PPT	SPT	PPT	—	PPT	SPT	ASP	AT-1	8'-6"	8'-6"	
A256	ASSIST. DIR. NURSING	VT-1	—	RB	—	PPT	—	PPT	SPT	PPT	—	PPT	—	ASP	AT-1	8'-6"	8'-6"	
A2101	ELECTRICAL ROOM	—	CCS	—	RB	—	CPT	—	CPT	—	CPT	—	CPT	—	CPT	—	—	
B201	CORRIDOR	VT-1	—	RB	—	PVF	—	PVF	—	PVF	—	PVF	—	AT-A	NOTE #1	8'-0"	—	
B202	CORRIDOR	VT-1	—	RB	—	PVF	—	PVF	—	PVF	—	PVF	—	AT-A	NOTE #1	8'-0"	—	
B203	CORRIDOR	CP	—	RB	—	PVF	—	PVF	—	PVF	—	PVF	—	AT-A	NOTE #1	8'-0"	—	
B203A	CORRIDOR	VT-1	—	RB	—	PVF	—	PVF	—	PVF	—	PVF	—	AT-A	NOTE #1	8'-0"	—	
B203B	ADMIN. OFFICES	CP	—	RB	—	PVF	—	PVF	—	PVF	—	PVF	—	ASP	AT-1	8'-6"	8'-6"	
B204	2-BED ROOM	VT-1	—	RB	—	PPT	SPT	PPT	—	PPT	—	PPT	—	ASP	AT-1	8'-6"	8'-6"	
B206	DOCTOR'S OFFICE	VT-1	—	RB	—	PPT	—	PPT	—	PPT	—	PPT	SPT	ASP	AT-1	8'-6"	8'-6"	
B207	MENTAL HEALTH CLINIC	VT-1	—	RB	—	PPT	—	PPT	SPT	PPT	—	PPT	SPT	ASP	AT-1	8'-6"	8'-6"	
B209A	CORRIDOR	VT-1	—	RB	—	PVF	—	PVF	—	PVF	—	PVF	—	AT-A	NOTE #1	8'-0"	—	
B212	4-BED ROOM	VT-1	—	RB	—	PPT	—	PPT	SPT	PPT	—	PPT	SPT	ASP	AT-1	8'-6"	8'-6"	
B213	2-BED ROOM	VT-1	—	RB	—	PPT	—	PPT	—	PPT	—	PPT	SPT	ASP	AT-1	8'-6"	8'-6"	
B215	WAITING ROOM	VT-1	—	RB	—	PPT	—	PPT	—	PPT	—	PPT	SPT	ASP	AT-1	8'-6"	8'-6"	
B216	FAMILY ADV. OFFICE	VT-1	—	RB	—	PPT	—	PPT	SPT	PPT	—	PPT	—	ASP	AT-1	8'-6"	8'-6"	
B219	2-BED ROOM	VT-1	—	RB	—	PPT	—	PPT	SPT	PPT	—	PPT	—	ASP	AT-1	8'-6"	8'-6"	
B220	4-BED ROOM	VT-1	—	RB	—	PPT	—	PPT	SPT	PPT	—	PPT	SPT	ASP	AT-1	8'-6"	8'-6"	
B224	SHOWER	CT	—	CT	—	PLG	—	PLG	—	PLG	—	PLG	—	PPT	AT-2	8'-0"	7'-10"	
B225	DOCTOR'S OFFICE	VT-1	—	RB	SPM	PPT	—	PPT	—	PPT	SPT	PPT	SPT	ASP	AT-1	8'-6"	8'-6"	
B226	DOCTOR'S OFFICE	VT-1	—	RB	—	PPT	—	PPT	SPT	PPT	—	PPT	SPT	ASP	AT-1	8'-6"	8'-6"	
B229	2-BED ROOM	VT-1	—	RB	—	PPT	—	PPT	SPT	PPT	—	PPT	—	ASP	AT-1	8'-6"	8'-6"	
B230	CHAMPUS	CP	—	RB	—	PPT	—	PPT	SPT	PPT	—	PPT	—	ASP	AT-1	8'-6"	8'-6"	
B236	PAT ADMIN. TRANSC.	CP	—	RB	—	PPT	—	PPT	SPT	PPT	—	PPT	SPT	ASP	AT-1	8'-6"	8'-6"	
B237	PAT. ADMIN. ARCHIVES	CP	—	RB	—	PPT	—	PPT	SPT	PPT	—	PPT	SPT	ASP	AT-1	8'-6"	8'-6"	
B242	OVERSEAS SCREENING	CP	—	RB	—	PPT	—	PPT	SPT	PPT	—	PPT	—	ASP	AT-1	8'-6"	8'-6"	
B243	ADMISSION OFFICE	CP	—	RB	—	PPT	—	PPT	—	PPT	—	PPT	SPT	ASP	AT-1	8'-6"	8'-6"	
B2101	ELECTRICAL ROOM	—	CP	—	RB	—	CPT	—	CPT	—	CPT	—	CPT	—	CPT	—	—	
C201	CORRIDOR	VT-1	—	RB	—	PVF	—	PVF	—	PVF	—	PVF	—	AT-A	NOTE #1	8'-0"	—	
C202	CORRIDOR	VT-1	—	RB	—	PLG	—	PLG	—	PLG	—	PLG	—	AT-A	NOTE #1	8'-0"	8'-0"	
C203	CORRIDOR	SPCF	—	SPCF	—	PLG	—	PLG	—	PLG	—	PLG	—	AT-A	NOTE #1	8'-0"	8'-0"	
C203A	SCRUB	SPCF	—	SPCF	—	PLG	—	PLG	—	PLG	—	PLG	—	AT-A	NOTE #1	8'-0"	8'-0"	
C204	CORRIDOR	VT-1	—	RB	—	PPT	—	PPT	—	PPT	—	PPT	—	ASP	AT-1	8'-6"	8'-6"	
C208	OPERATING ROOM	SPCF	—	SPCF	—	PLG	SPT	PLG	SPT	PLG	SPT	PLG	SPT	PPT	GLG	8'-8"	8'-8"	
C209	SURGICAL STORAGE	SPCF	—	SPCF	—	PLG	—	PLG	—	PLG	—	PLG	—	PPT	AT-2	8'-0"	7'-10"	
C210	SPLINT/PLASTER	SPCF	—	SPCF	—	PLG	—	PLG	—	PLG	—	PLG	—	PPT	AT-2	8'-0"	7'-10"	
C211	STORAGE	VT-1	—	RB	—	PLG	—	PLG	—	PLG	—	PLG	—	ASP	AT-2	8'-0"	7'-10"	
C221	ANESTH. TECH. WORK	SPCF	—	SPCF	—	PLG	—	PLG	—	PLG	—	PLG	—	AT-A	NOTE #1	8'-0"	—	
C222	OPERATING ROOM	SPCF	—	SPCF	—	PLG	SPT	PLG	SPT	PLG	SPT	PLG	SPT	PPT	GLG	8'-8"	8'-8"	
C223	SUB-STERILE	SPCF	—	SPCF	—	PPT	—	PPT	—	PPT	—	PPT	—	PLG	AT-2	8'-6"	8'-4"	
C224	OPERATING ROOM	SPCF	—	SPCF	—	PLG	SPT	PLG	SPT	PLG	SPT	PLG	SPT	PPT	GLG	8'-8"	8'-8"	
C225	GAS STORAGE	SPCF	—	SPCF	—	PLG	—	PLG	—	PLG	—	PLG	—	AT-A	NOTE #1	8'-0"	—	
C226	ORTHO. SUPPLY	VT-1	—	RB	—	PVF	—	PVF	—	PVF	—	PVF	—	ASP	AT-1	8'-0"	8'-0"	
C227	ORTHO SUPPLY	VT-1	—	RB	—	PVF	—	PVF	—	PVF	—	PVF	—	ASP	AT-1	8'-0"	8'-0"	
C230	GNW STORAGE	VT-1	—	RB	—	PPT	—	PPT	—	PPT	SPT	PPT	—	ASP	AT-1	8'-6"	8'-6"	
C231	OFFICE	VT-1	—	RB	SPM	PPT	SPT	PPT	—	PPT	—	PPT	SPT	ASP	AT-1	8'-6"	8'-6"	

FINISH LEGEND

AT-A	ACOUSTICAL TILE CEILING (EXISTING 2X4)
AT-1	ACOUSTICAL TILE CEILING (2X2 STANDARD FINISH)
AT-2	ACOUSTICAL TILE CEILING (2X2 WATER PROOF FINISH)
ASP	ACOUSTICAL CONCEALED SPLINE CEILING
MSP	METAL CONCEALED SPLINE CEILING
PPT	PLASTER PAINTED
PSP	PLASTER SPRAYED TEXTURED FINISH
PLG	PLASTER LIQUID GLAZED COATING
GPT	GYPSUM WALL BOARD PAINTED
GLG	GYPSUM WALL BOARD LIQUID GLAZED COATING
CPT	CONCRETE PAINTED
CCS	CONCRETE WITH CONCRETE SEALER
CT	CERAMIC TILE
PVF	PLASTER WITH VINYL WALL FABRIC
GVF	GYPSUM WALL BOARD W/ VINYL WALL FABRIC
QT	QUARRY TILE
CP	CARPET
VT-1	VINYL ASBESTOS TILE
VT-2	VINYL COMPOSITION TILE
SV	SHEET VINYL
EP	EPOXY TERRAZZO
SPCF	CONDUCTIVE FLOORING
SPT	PATCH & PAINT TO MATCH EXISTING
SPM	PATCH TO MATCH EXISTING
RB	RESILIENT BASE
EXP	EXPOSED STRUCTURE

NOTE #1 REMOVE EXISTING LAY-IN ACOUSTICAL CEILING SYSTEM TO EXTENT REQUIRED TO ACCOMPLISH WORK ABOVE CEILING. (STORE MATERIALS AND RE-INSTALL EXISTING CEILING SYSTEM)

NOTE #2 REMOVE EXISTING METAL CONCEALED SPLINE CEILING TO EXTENT REQUIRED TO ACCOMPLISH WORK ABOVE CEILING. (STORE MATERIALS AND RE-INSTALL EXISTING CEILING SYSTEM)

SHERLOCK, SMITH & ADAMS, INC.
ARCHITECTS – ENGINEERS
MONTGOMERY, ALABAMA

U.S. NAVAL STATION ROOSEVELT ROADS, P.R.
REPAIRS TO NAVAL HOSPITAL
FINISH SCHEDULE

CONSTR. CONTR. NO. XXXXX | SPECIFICATION NO. XXXXX | NAVFAC DRWG. NO. XXXXX | TF NO. XXXXX | SHEET ? OF ??

PLATE NO. A3-3

PWC # XXXXX

DEPARTMENT OF THE NAVY
NAVY PUBLIC WORKS CENTER, JACKSONVILLE, FL
NAVAL FACILITIES ENGINEERING COMMAND

U.S. NAVAL STATION ROOSEVELT ROADS, P.R.
REPAIRS TO NAVAL HOSPITAL
FINISH SCHEDULE

DESIGN BY: RAS
DRAWN BY: FLT

DIS. DIV. DIR. DATE
SATISFACTORY TO DATE
REVISION DESCRIPTION DATE

FINISH SCHEDULE

ROOM NO.	ROOM NAME	FLOOR EXIST.	FLOOR NEW	BASE EXIST.	BASE NEW	WALLS NORTH EXIST.	WALLS NORTH NEW	WALLS EAST EXIST.	WALLS EAST NEW	WALLS SOUTH EXIST.	WALLS SOUTH NEW	WALLS WEST EXIST.	WALLS WEST NEW	CEILINGS MATERIAL EXIST.	CEILINGS MATERIAL NEW	CEILINGS HGT. EXIST.	CEILINGS HGT. NEW	REMARKS
C231A	TOILET	CT	—	CT	—	PLG	—	PLG	—	PLG	—	PLG	—	PPT	AT-1	8'-0"	7'-10"	
C233	RECOVERY ROOM / SCU	VT-1	—	RB	—	PPT	—	PPT	—	PPT	—	PPT	—	ASP	AT-1	*	*	* VARIES SEE REFLECTED PLAN SHEET A9-3
C235	UNIT OFFICE	VT-1	—	RB	—	PPT	—	PPT	—	PPT	—	PPT	—	ASP	AT-1	8'-6"	8'-6"	
C236	OFFICE	VT-1	—	RB	—	PPT	SPT	PPT	—	PPT	SPT	PPT	—	ASP	AT-1	8'-6"	8'-6"	
C238	QUIET OFFICE	VT-1	—	RB	—	PPT	—	PPT	—	PPT	—	PPT	—	ASP	AT-1	8'-6"	8'-6"	
C239	TOILET	CT	—	CT	—	PLG	—	PLG	—	PLG	—	PLG	—	PPT	AT-2	8'-0"	7'-10"	
C240	STORAGE	VT-1	—	RB	—	PPT	—	PPT	—	PPT	—	PPT	—	PPT	AT-1	8'-6"	8'-4"	
C241	4-BED ROOM	VT-1	—	RB	—	PPT	SPT	PPT	—	PPT	SPT	PPT	—	ASP	AT-1	8'-6"	8'-6"	
C243	SOILED	VT-1	—	RB	—	PLG	—	PLG	—	PLG	—	PLG	—	PPT	AT-1	8'-0"	7'-10"	
C244	TOILET	CT	—	CT	—	PLG	—	PLG	—	PLG	—	PLG	—	PPT	AT-1	8'-0"	7'-10"	
C245	ELECTRICAL ROOM	VT-1	—	RB	—	PVF	—	PVF	—	PVF	—	PVF	—	ASP	AT-1	8'-0"	8'-0"	
C246	1-BED ROOM	VT-1	—	RB	—	PPT	SPT	PPT	—	PPT	—	PPT	—	ASP	AT-1	8'-6"	8'-6"	
C2101	ELECTRICAL ROOM	—	CCS	—	RB	—	CPT	—	CPT	—	CPT	—	CPT	—	CPT	—	—	
D201	ELEVATOR LOBBY	VT-1	—	RB	—	PVF	—	PVF	—	PVF	—	PVF	—	ACT-C	NOTE #1	8'-0"	8'-0"	
D201A	OFFICE	VT-1	—	RB	—	PPT	—	PPT	—	PPT	—	PPT	—	AT-A	AT-1	8'-0"	8'-0"	
D202	CORRIDOR	VT-1	—	RB	—	PVF	—	PVF	—	PVF	—	PVF	—	ACT-C	NOTE #1	8'-0"	—	
D203	CORRIDOR	VT-1	—	RB	—	PVF	—	PVF	—	PVF	—	PVF	—	ACT-C	NOTE #1	8'-0"	—	
D204	CORRIDOR	VT-1	—	RB	—	PVF	—	PVF	—	PVF	—	PVF	—	ACT-C	NOTE #1	8'-0"	—	
D205	CORRIDOR	VT-1	—	RB	—	PVF	—	PVF	—	PVF	—	PVF	—	ACT-C	NOTE #1	8'-0"	—	
D206	CORRIDOR	VT-1	—	RB	—	PVF	—	PVF	—	PVF	—	PVF	—	ACT-C	NOTE #1	8'-0"	—	
D209	LOCKERS	VT-1	—	RB	—	PPT	—	PPT	—	PPT	—	PPT	—	PPT	AT-1	8'-6"	—	
D210	TOILET	CT	—	CT	—	PLG	—	PLG	—	PLG	—	PLG	—	PPT	AT-2	8'-0"	7'-10"	
D211	STORAGE	VT-1	—	RB	—	PPT	—	PPT	—	PPT	—	PPT	—	ASP	AT-1	8'-6"	8'-6"	
D212	TOILET	CT	—	CT	—	PLG	—	PLG	—	PLG	—	PLG	—	PPT	AT-2	8'-0"	7'-10"	
D213	LOCKERS	VT-1	—	RB	—	PPT	—	PPT	—	PPT	—	PPT	—	PPT	AT-2	8'-0"	7'-10"	
D214	CLEAN UTILITY	CT	—	CT	—	PLG	—	PLG	—	PLG	—	PLG	—	PPT	AT-2	8'-0"	7'-10"	
D215	STORAGE	SPCF	—	SPCF	—	PLG	—	PLG	—	PLG	—	PLG	—	PPT	AT-1	8'-0"	7'-10"	
D216	DELIVERY ROOM NO.1	SPCF	—	SPCF	—	PLG	SPT	PLG	SPT	PLG	SPT	PLG	SPT	PPT	GLC	8'-8"	8'-8"	
D218	LABOR ROOM NO.1	VT-1	—	RB	—	PPT	—	PPT	—	PPT	—	PPT	—	PPT	AT-2	8'-0"	7'-10"	
D219	EXAM	VT-1	—	RB	—	PPT	—	PPT	—	PPT	—	PPT	—	PPT	AT-2	8'-0"	7'-10"	
D220	NURSE	VT-1	—	RB	—	PPT	—	PPT	—	PPT	—	PPT	—	AT-A	NOTE #1	8'-0"	—	
D221	LABOR ROOM NO.2	CT	—	CT	—	PLG	—	PLG	—	PLG	—	PLG	—	PPT	AT-2	8'-0"	7'-10"	
D222	R.P. OFFICE	VT-1	—	RB	—	PPT	—	PPT	—	PPT	—	PPT	SPT	ASP	AT-1	8'-6"	8'-6"	
D223	CHAPLIN'S OFFICE	VT-1	—	RB	—	PPT	—	PPT	SPT	PPT	—	PPT	—	ASP	AT-1	8'-6"	8'-6"	
D226	STORAGE	CT	—	CT	—	PLG	—	PLG	—	PLG	—	PLG	—	PPT	AT-1	8'-0"	7'-10"	
D227	PROSTH. LAB	VT-1	—	RB	—	PPT	—	PPT	—	PPT	—	PPT	—	PPT	AT-2	8'-0"	7'-10"	
D228	SCRUB	VT-1	—	RB	—	PPT	—	PPT	—	PPT	—	PPT	—	PPT	AT-1	8'-0"	7'-10"	
D229	DENTAL O.R. NO.2	VT-1	—	RB	—	PPT	—	PPT	—	PPT	—	PPT	—	ASP	AT-2	8'-0"	8'-0"	
D230	DENTAL O.R. NO.1	VT-1	—	RB	—	PPT	—	PPT	—	PPT	—	PPT	—	ASP	AT-2	8'-0"	8'-0"	
D236	1-BED ROOM	VT-1	—	RB	—	PPT	SPT	PPT	—	PPT	—	PPT	—	ASP	AT-1	8'-6"	8'-6"	
D240	4-BED ROOM	VT-1	—	RB	—	PPT	SPT	PPT	—	PPT	SPT	PPT	—	ASP	AT-1	8'-6"	8'-6"	
D245	ELECTRICAL ROOM	VT-1	—	RB	—	PPT	—	PPT	—	PPT	—	PPT	—	AT-A	AT-1	8'-0"	8'-0"	

FINISH LEGEND

AT-A	ACOUSTICAL TILE CEILING (EXISTING 2X4)
AT-1	ACOUSTICAL TILE CEILING (2X2 STANDARD FINISH)
AT-2	ACOUSTICAL TILE CEILING (2X2 WATER PROOF FINISH)
ASP	ACOUSTICAL CONCEALED SPLINE CEILING
MSP	METAL CONCEALED SPLINE CEILING
PPT	PLASTER PAINTED
PSP	PLASTER SPRAYED TEXTURED FINISH
PLG	PLASTER LIQUID GLAZED COATING
GPT	GYPSUM WALL BOARD PAINTED
GLG	GYPSUM WALL BOARD LIQUID GLAZED COATING
CPT	CONCRETE PAINTED
CCS	CONCRETE WITH CONCRETE SEALER
CT	CERAMIC TILE
PVF	PLASTER WITH VINYL WALL FABRIC
GVF	GYPSUM WALL BOARD W/ VINYL WALL FABRIC
QT	QUARRY TILE
CP	CARPET
VT-1	VINYL ASBESTOS TILE
VT-2	VINYL COMPOSITION TILE
SV	SHEET VINYL
EP	EPOXY TERRAZZO
SPCF	CONDUCTIVE FLOORING
SPT	PATCH & PAINT TO MATCH EXISTING
SPM	PATCH TO MATCH EXISTING
RB	RESILIENT BASE
EXP	EXPOSED STRUCTURE

NOTE #1 — REMOVE EXISTING LAY-IN ACOUSTICAL CEILING SYSTEM TO EXTENT REQUIRED TO ACCOMPLISH WORK ABOVE CEILING. (STORE MATERIALS AND RE-INSTALL EXISTING CEILING SYSTEM)

NOTE #2 — REMOVE EXISTING METAL CONCEALED SPLINE CEILING TO EXTENT REQUIRED TO ACCOMPLISH WORK ABOVE CEILING. (STORE MATERIALS AND RE-INSTALL EXISTING CEILING SYSTEM)

ENG. DIV. DIR.: DATE:
SATISFACTORY TO: DATE:
DESIGN BY: RAS DRAWN BY: FLT

REVISION DESCRIPTION	DATE

NAVAL FACILITIES ENGINEERING COMMAND
DEPARTMENT OF THE NAVY
NAVY PUBLIC WORKS CENTER, JACKSONVILLE, FL
U.S. NAVAL STATION ROOSEVELT ROADS, P.R.
REPAIRS TO NAVAL HOSPITAL
FINISH SCHEDULE

SHERLOCK, SMITH & ADAMS, INC.
ARCHITECTS – ENGINEERS
MONTGOMERY, ALABAMA

U.S. NAVAL STATION ROOSEVELT ROADS, P.R.
REPAIRS TO NAVAL HOSPITAL
FINISH SCHEDULE

CONSTR. CONTR. NO.	SPECIFICATION NO.	NAVFAC DRWG. NO.	TF NO. XXXXX
XXXXX	XXXXX	XXXXX	SHEET ? OF ??

PLATE NO. A3-4

PWC # XXXXX

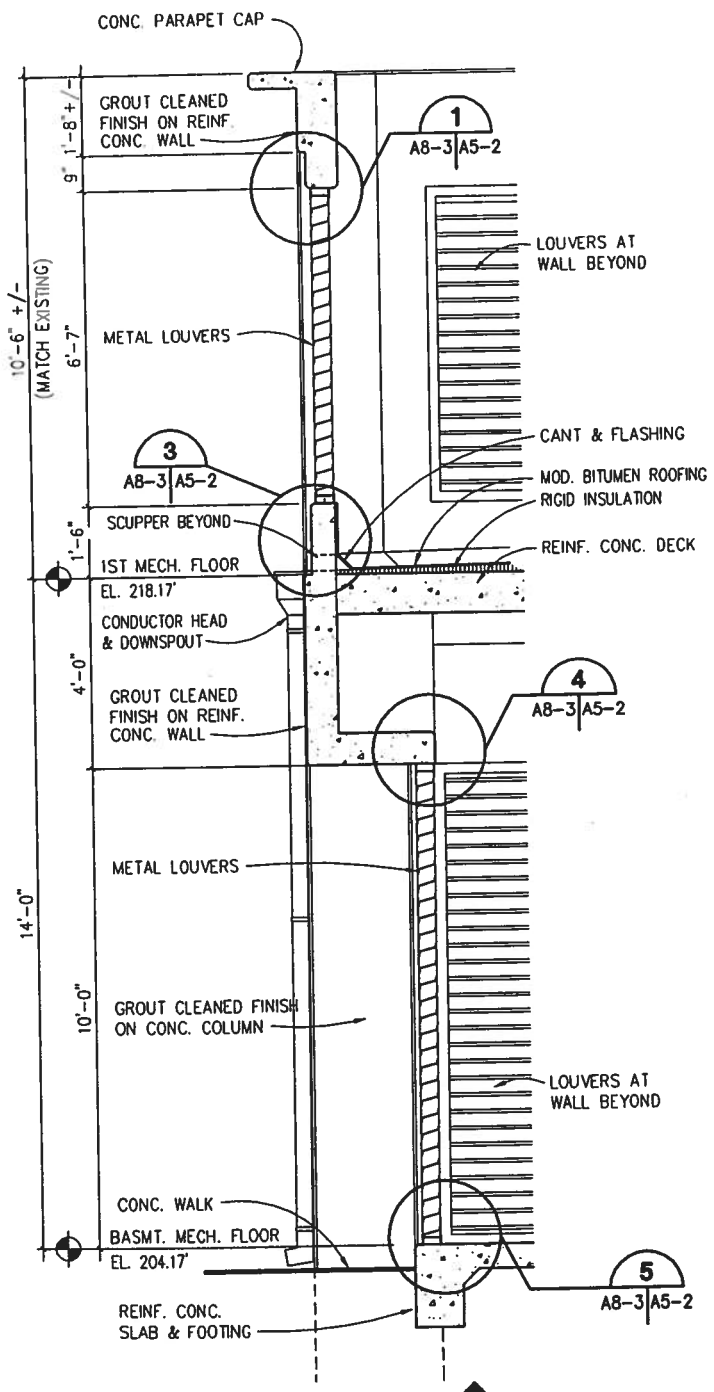

SECTION A
SCALE: 1/2" = 1'-0"
A6-1 A8-3

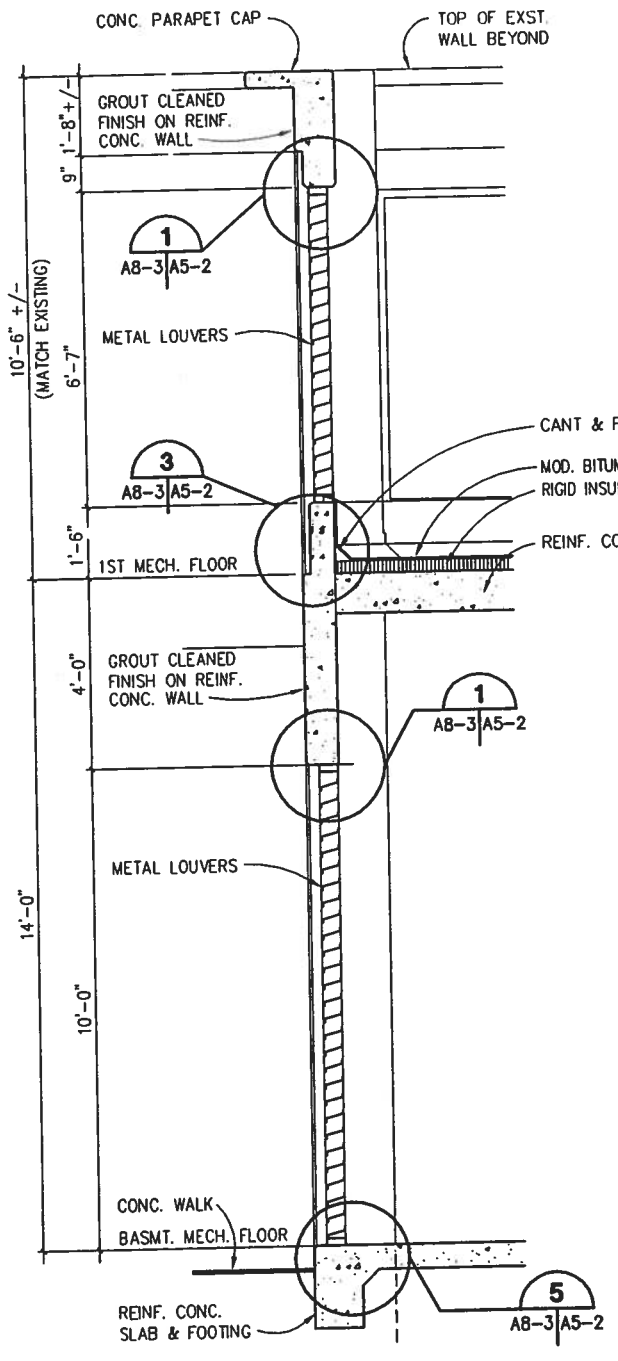

SECTION B
SCALE: 1/2" = 1'-0"
A6-1 A8-3

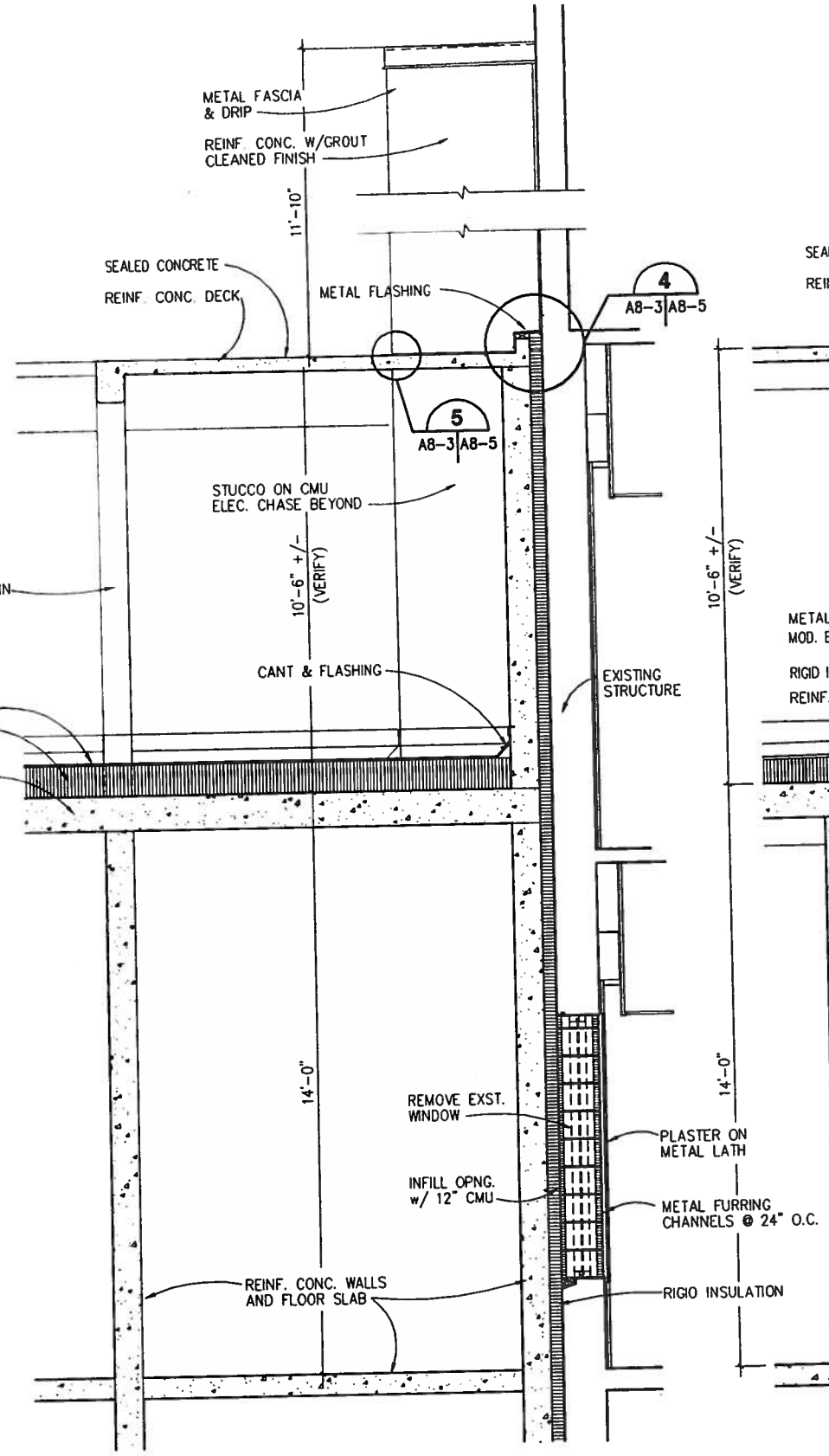

SECTION C
SCALE: 1/2" = 1'-0"
A6-1 A8-3

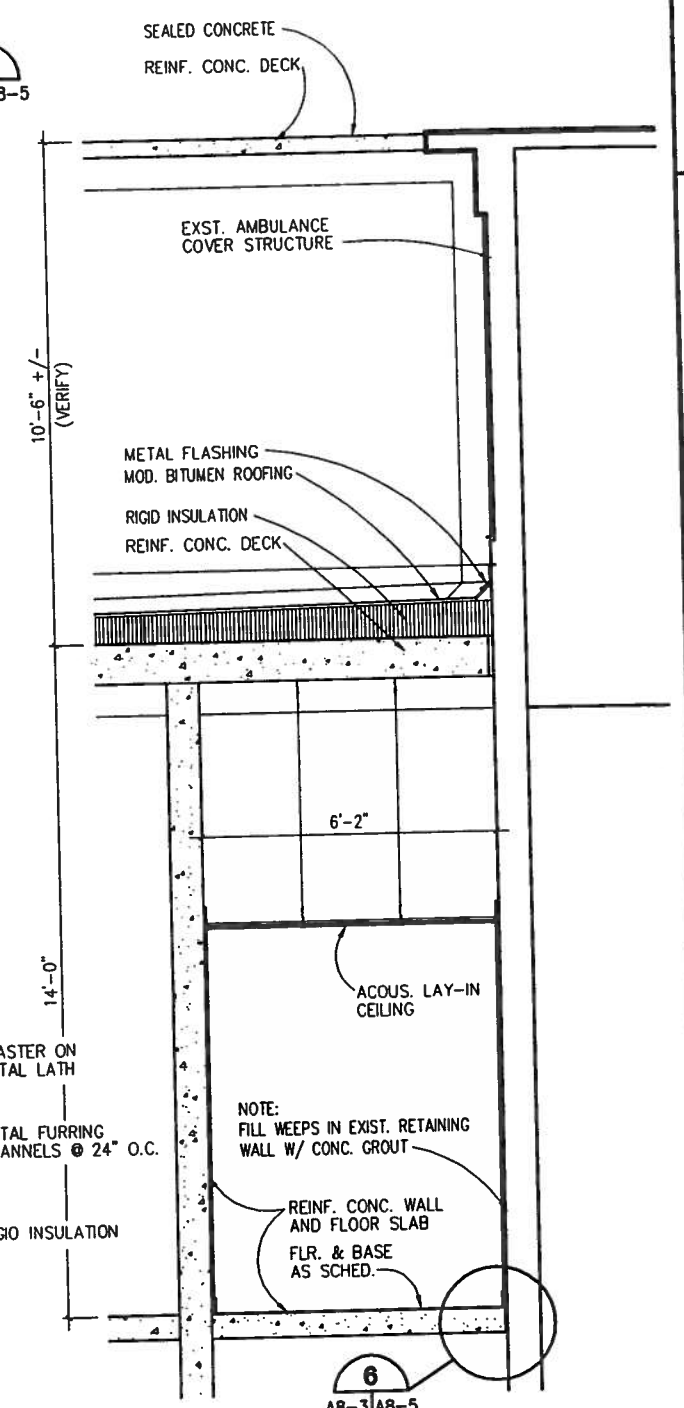

SECTION D
SCALE: 1/2" = 1'-0"
A6-1 A8-3

0 1' 2' 3' 4' 5' 6' 7'
GRAPHIC SCALE
1/2"=1'-0"

SHERLOCK, SMITH & ADAMS, INC.
ARCHITECTS – ENGINEERS
MONTGOMERY, ALABAMA

U.S. NAVAL STATION ROOSEVELT ROADS, P.R.
REPAIRS TO NAVAL HOSPITAL
SECTIONS & DETAILS

CONSTR. CONTR. NO.	SPECIFICATION NO.	NAVFAC DRWG. NO.	TF NO. XXXXX
XXXXX	XXXXX	XXXXX	SHEET ? OF ??

DEPARTMENT OF THE NAVY
NAVY PUBLIC WORKS CENTER, JACKSONVILLE, FL
NAVAL FACILITIES ENGINEERING COMMAND

U.S. NAVAL STATION ROOSEVELT ROADS, P.R.
REPAIRS TO NAVAL HOSPITAL
SECTIONS & DETAILS

PLATE NO.
A8-3

PWC # XXXXX

ENG. DIV. DIR.: DATE:
SATISFACTORY TO: DATE:
DESIGN BY: DAC DRAWN BY: FLT
REVISION DESCRIPTION DATE

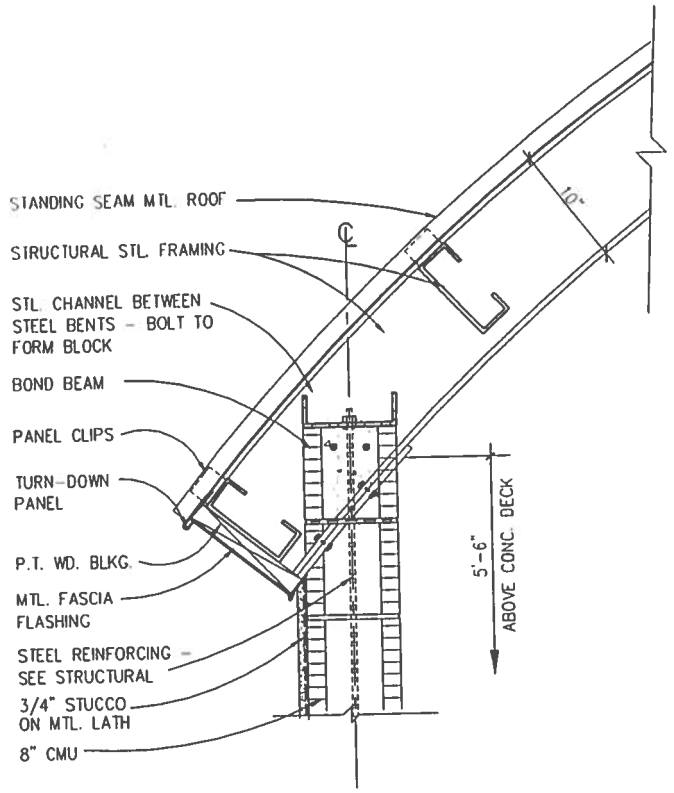

DETAIL 1 A8-4 | A8-4
SCALE: 1 1/2" = 1'-0"

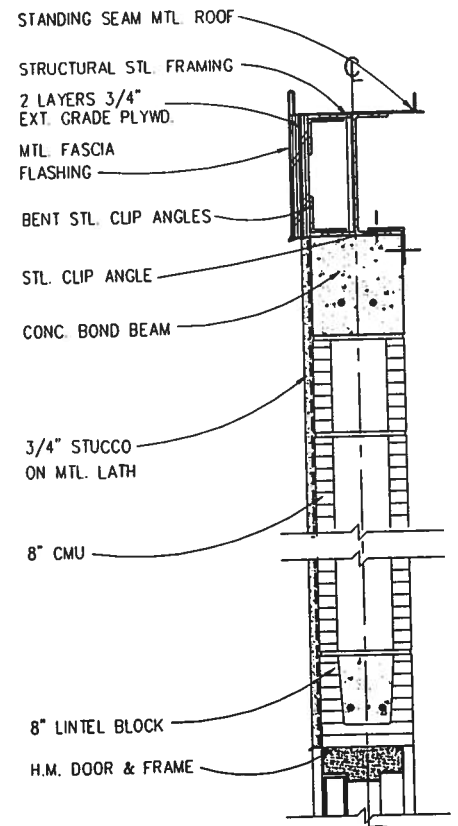

DETAIL 3 A4-2 | A8-4
SCALE: 1 1/2" = 1'-0"

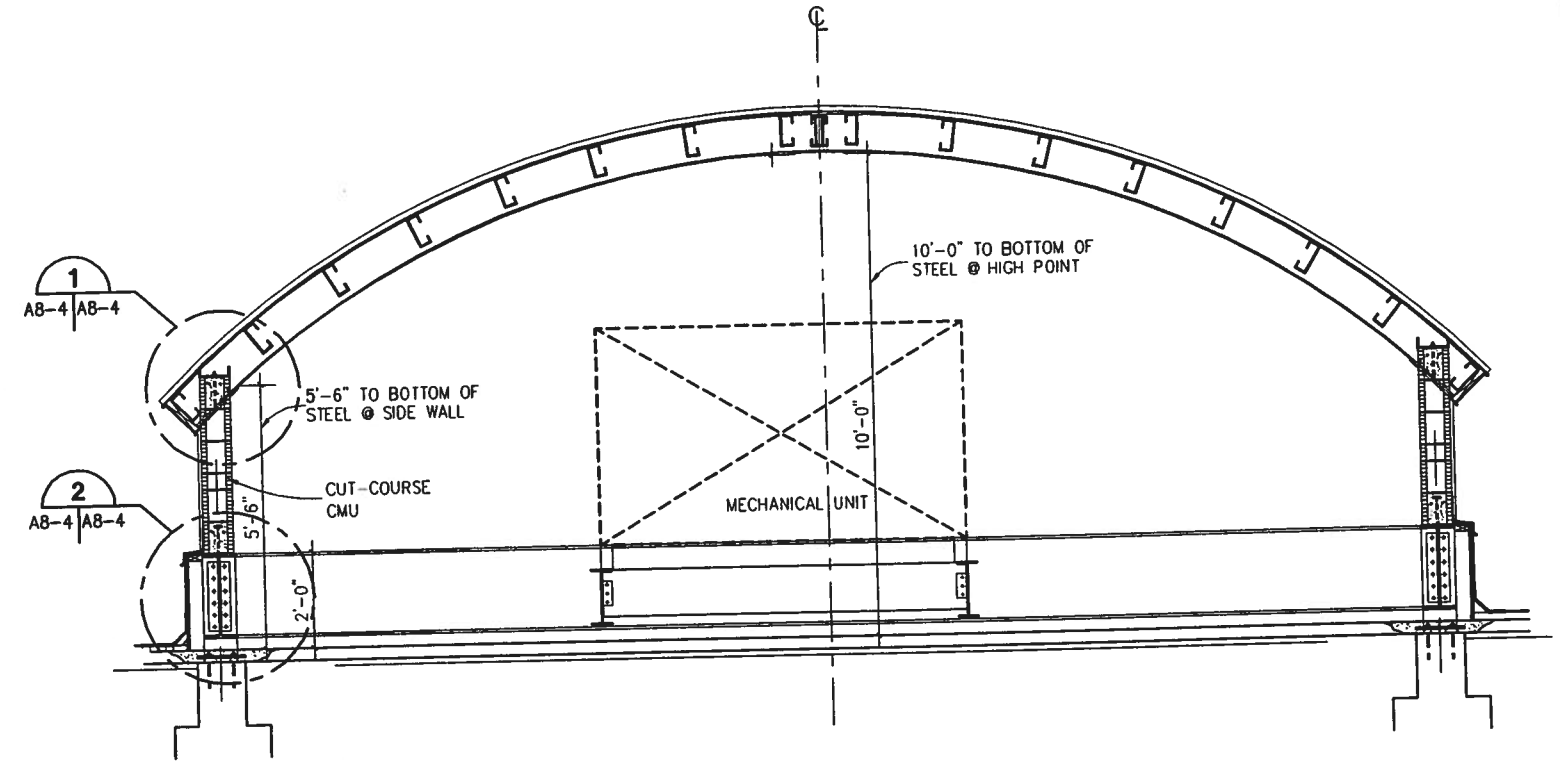

SECTION A A6-1 | A8-4
SCALE: 1/2" = 1'-0"

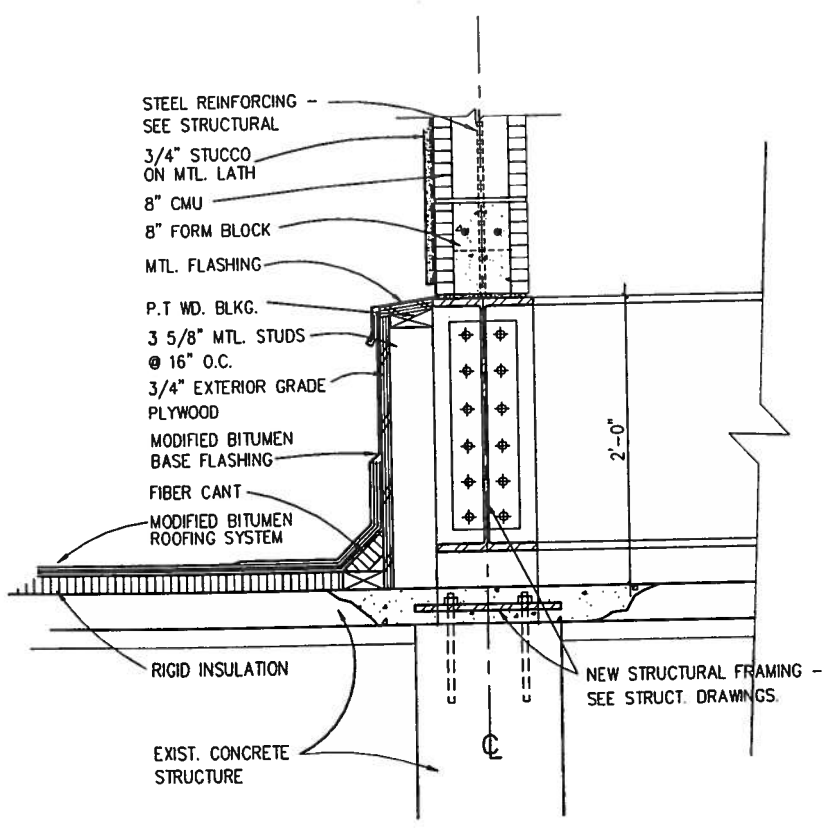

DETAIL 2 A2-4 | A8-4 A8-4
SCALE: 1 1/2" = 1'-0"

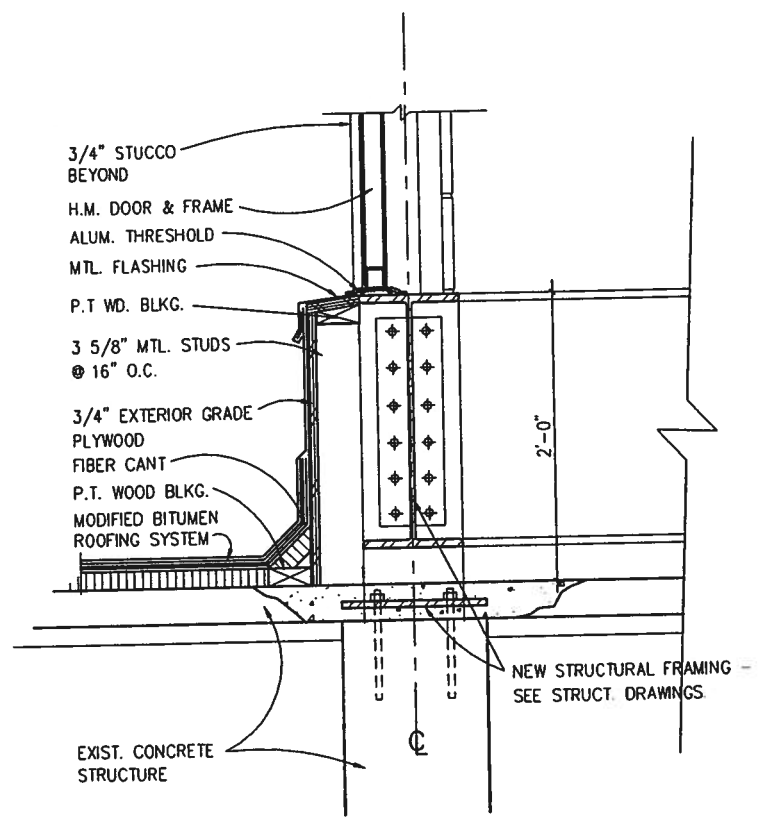

DETAIL 4 A4-2 | A8-4
SCALE: 1 1/2" = 1'-0"

0 3" 6" 9" 1' 6" 2' 6" 3'
GRAPHIC SCALE
1 1/2"=1'-0"

0 1' 2' 3' 4' 5' 6' 7'
GRAPHIC SCALE
1/2"=1'-0"

SHERLOCK, SMITH & ADAMS, INC.
ARCHITECTS - ENGINEERS
MONTGOMERY, ALABAMA

U.S. NAVAL STATION ROOSEVELT ROADS, P.R.
REPAIRS TO NAVAL HOSPITAL
SECTIONS & DETAILS

CONSTR. CONTR. NO.	SPECIFICATION NO.	NAVFAC DRWG. NO.	TF NO. XXXXX
XXXXX	XXXXX	XXXXX	SHEET ? OF ??

DEPARTMENT OF THE NAVY
NAVY PUBLIC WORKS CENTER, JACKSONVILLE, FL
NAVAL FACILITIES ENGINEERING COMMAND

U.S. NAVAL STATION ROOSEVELT ROADS, P.R.
REPAIRS TO NAVAL HOSPITAL
SECTIONS & DETAILS

PLATE NO.
A8-4

DESIGN BY: RAS DRAWN BY: FLT
CHK BY: RAS APPROVED:
ENG. DIV. DIR.: DATE:
SATISFACTORY TO: DATE:
REVISION DESCRIPTION DATE

PWC # XXXXX