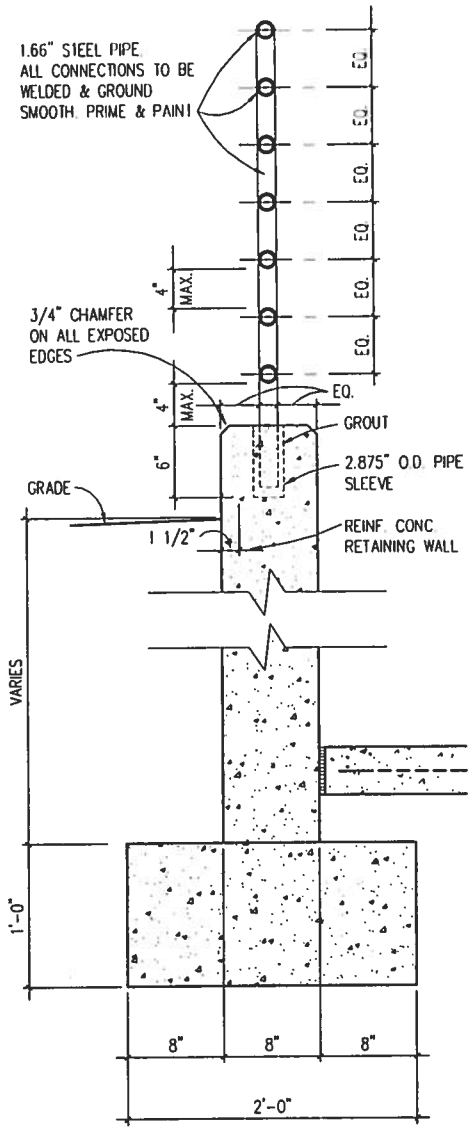

SECTION A
SCALE: 1 1/2" = 1'-0" — A4-2 | A8-5, A8-5

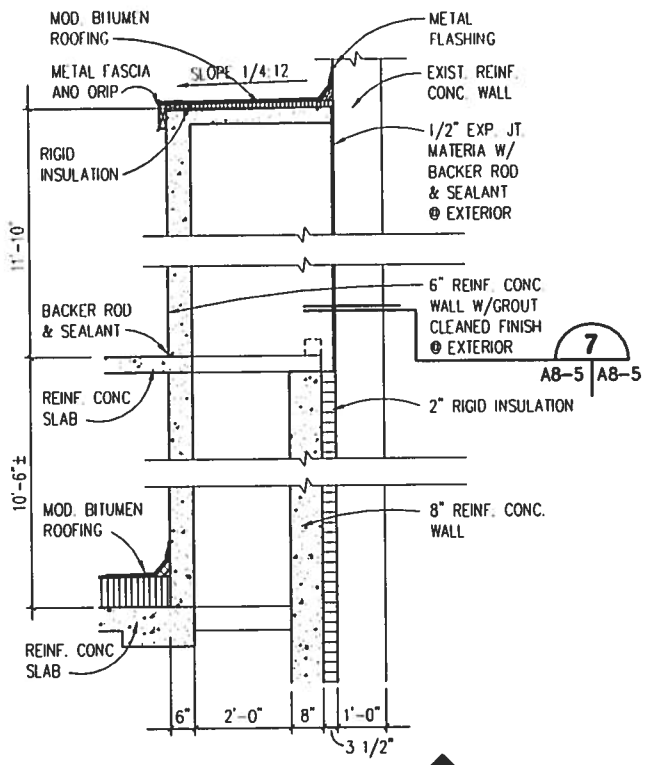

SECTION B
SCALE: 1/2" = 1'-0" — A4-2 | A8-5

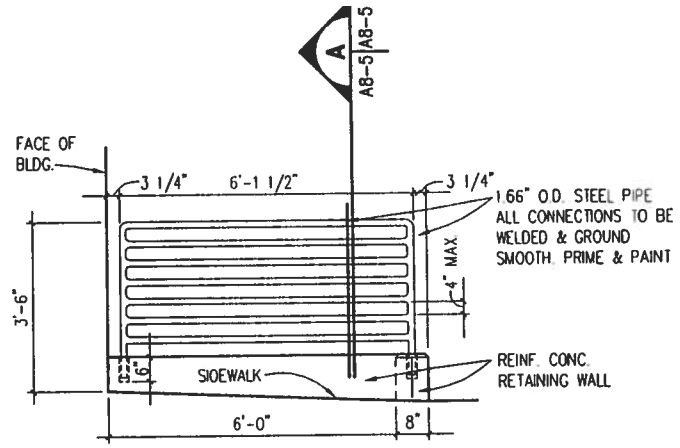

ELEVATION 1
SCALE: 1/2" = 1'-0" — A6-1 | A8-5

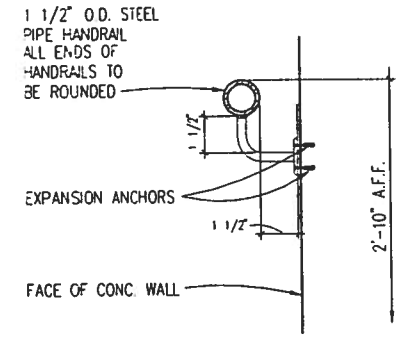

SECTION 2
SCALE: 1 1/2" = 1'-0" — A6-1 | A8-5

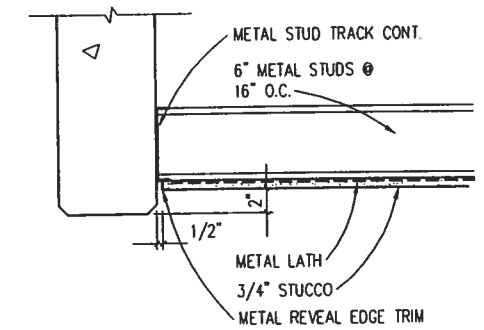

DETAIL 3
SCALE: 1 1/2" = 1'-0" — A8-2 | A8-5

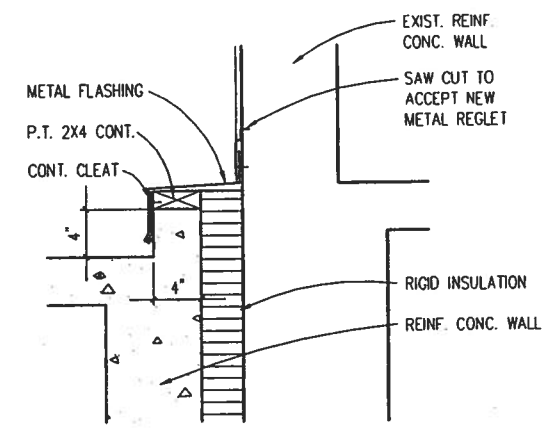

DETAIL 4
SCALE: 1 1/2" = 1'-0" — A8-3 | A8-5

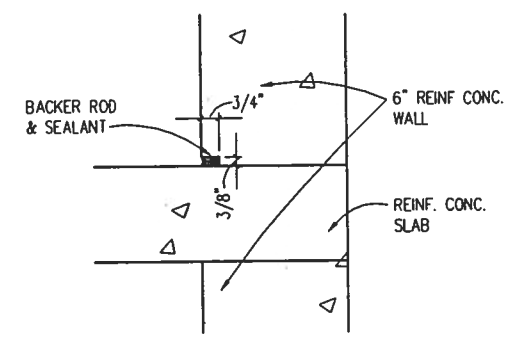

DETAIL 5
SCALE: 3" = 1'-0" — A8-3 | A8-5

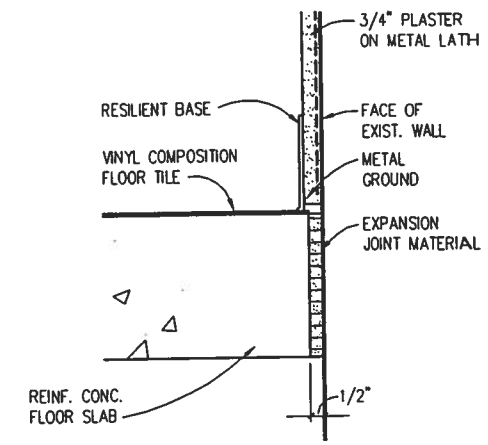

DETAIL 6
SCALE: 3" = 1'-0" — A8-3 | A8-5

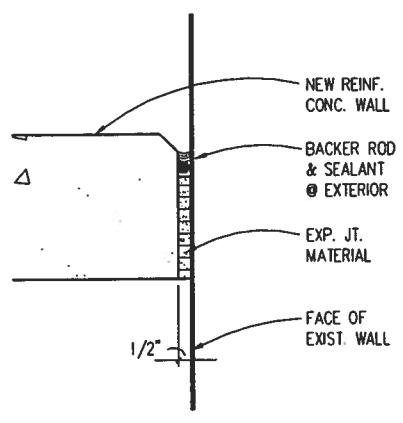

DETAIL 7
SCALE: 3" = 1'-0" — A6-1 | A8-5, A8-5

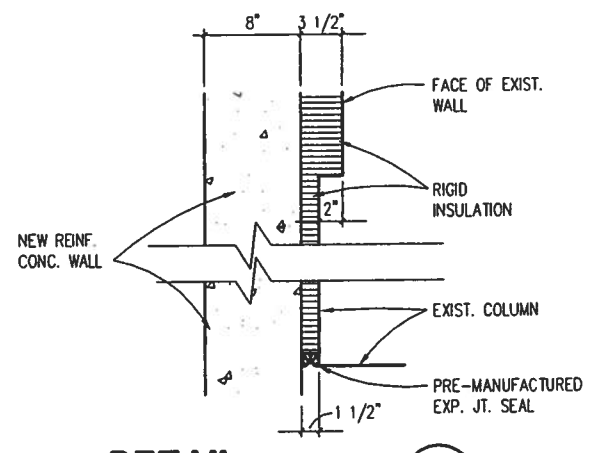

DETAIL 8
SCALE: 3" = 1'-0" — A4-2 | A8-5, A6-1

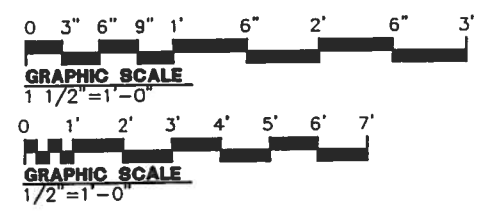

SHERLOCK, SMITH & ADAMS, INC.
ARCHITECTS – ENGINEERS
MONTGOMERY, ALABAMA

U.S. NAVAL STATION ROOSEVELT ROADS, P.R.
REPAIRS TO NAVAL HOSPITAL
SECTIONS & DETAILS

CONSTR. CONTR. NO.	SPECIFICATION NO.	NAVFAC DRWG. NO.	TF NO. XXXXX
XXXXX	XXXXX	XXXXX	SHEET ? OF ??

PLATE NO. A8-5

DEPARTMENT OF THE NAVY
NAVAL FACILITIES ENGINEERING COMMAND
NAVY PUBLIC WORKS CENTER, JACKSONVILLE, FL
U.S. NAVAL STATION ROOSEVELT ROADS, P.R.
REPAIRS TO NAVAL HOSPITAL
SECTIONS & DETAILS

DESIGN BY: RAS DRAWN BY: FLT

REVISION DESCRIPTION	DATE	ENG. DIV. DIR.	DATE	SATISFACTORY TO	DATE

PWC # XXXXX

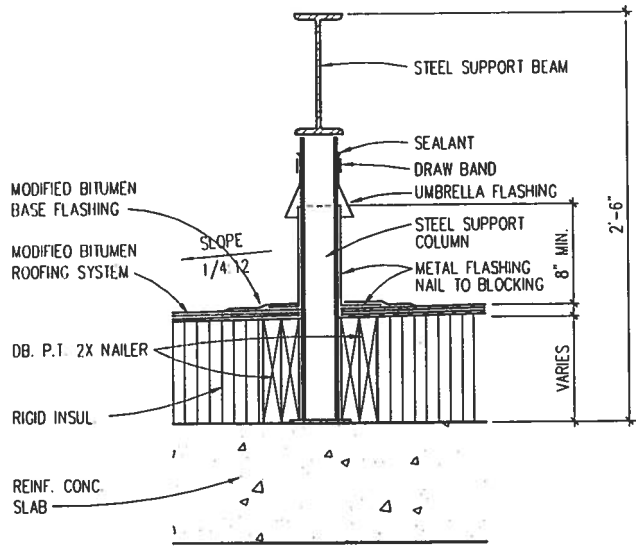

DETAIL 1
SCALE: 1 1/2" = 1'-0" A6-1|A8-6

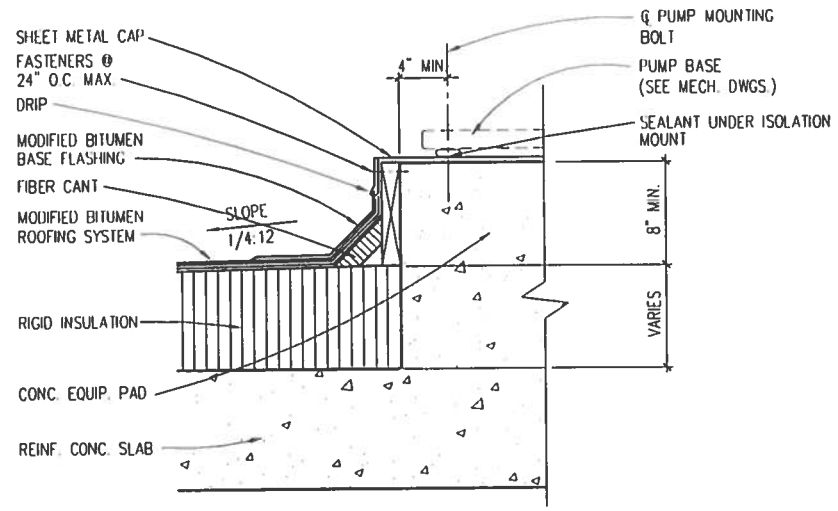

DETAIL 2
SCALE: 1 1/2" = 1'-0" A6-1|A8-6

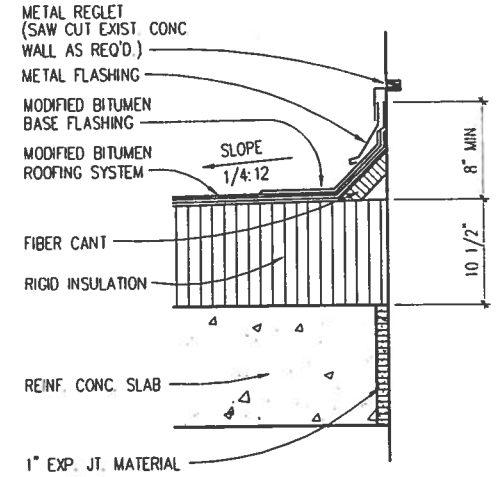

DETAIL 3
SCALE: 1 1/2" = 1'-0" A2-4|A8-6 A6-1

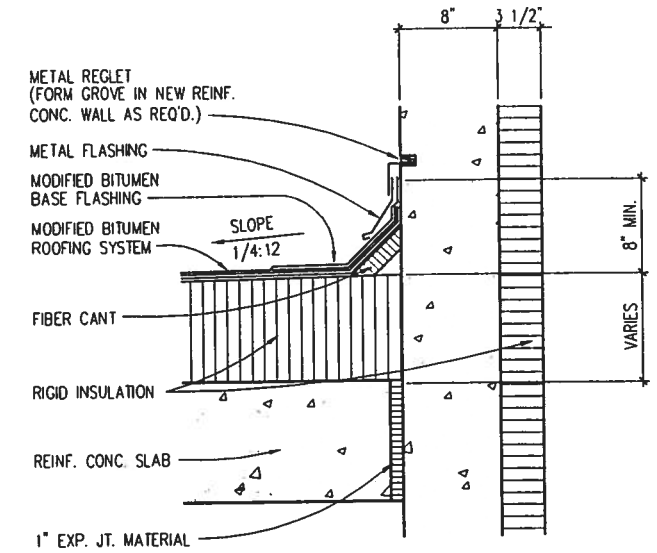

DETAIL 4
SCALE: 1 1/2" = 1'-0" A6-1|A8-6

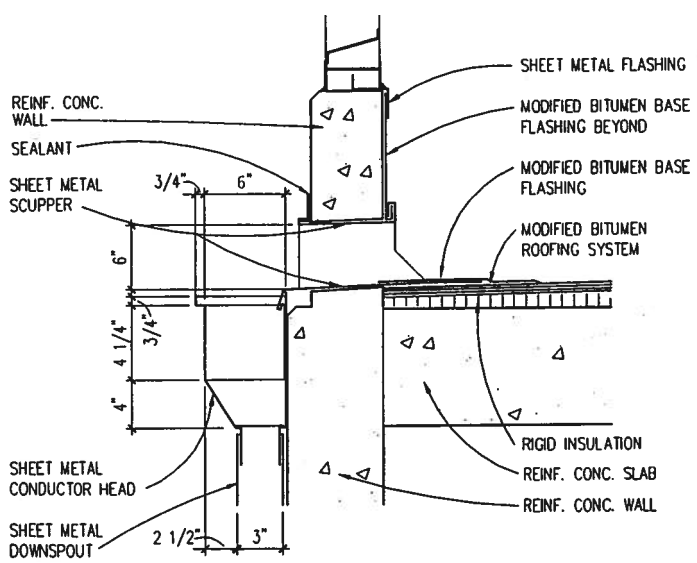

DETAIL 5
SCALE: 1 1/2" = 1'-0" A6-1|A8-6

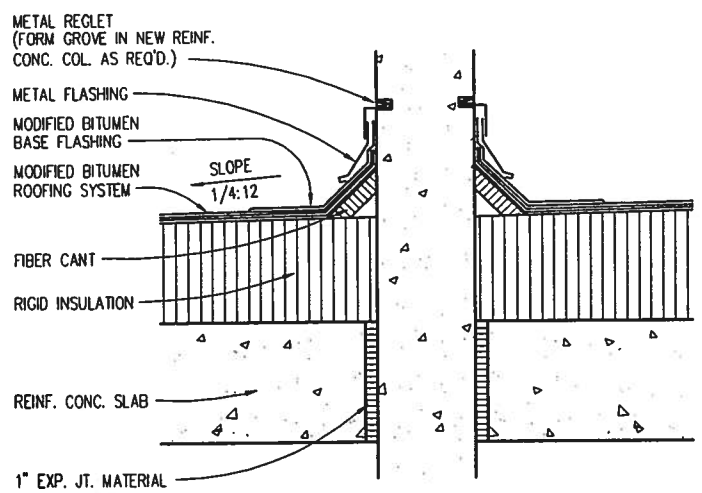

DETAIL 6
SCALE: 1 1/2" = 1'-0" A6-1|A8-6

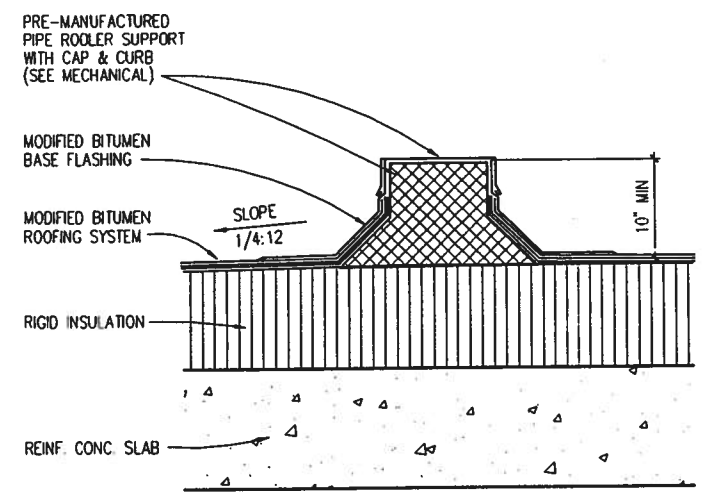

DETAIL 7
SCALE: 1 1/2" = 1'-0" A6-1|A8-6

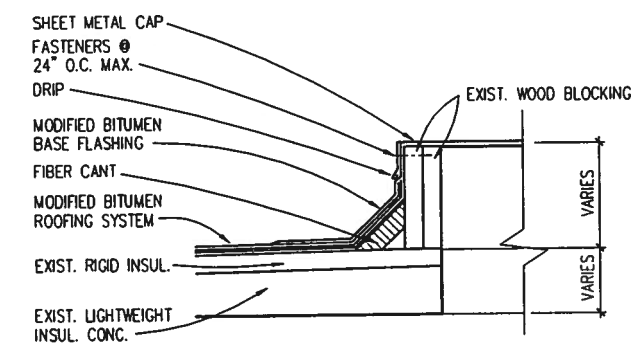

DETAIL 8
SCALE: 1 1/2" = 1'-0" A2-4|A8-6

0 3" 6" 9" 1' 6" 2' 6" 3'
GRAPHIC SCALE
1 1/2"=1'-0"

0 1' 2' 3' 4' 5' 6' 7'
GRAPHIC SCALE
1/2"=1'-0"

SHERLOCK, SMITH & ADAMS, INC.
ARCHITECTS – ENGINEERS
MONTGOMERY, ALABAMA

U.S. NAVAL STATION ROOSEVELT ROADS, P.R.
REPAIRS TO NAVAL HOSPITAL
SECTIONS & DETAILS

CONSTR. CONTR. NO.	SPECIFICATION NO.	NAVFAC DRWG. NO.	TF NO. XXXXX
XXXXX	XXXXX	XXXXX	SHEET ? OF ??

DRAWN BY: GTT
REVIEW BY: DJC
DSG. DV. DR.: DATE:
SATISFACTORY TO: DATE:
REVISION DESCRIPTION DATE

NAVAL FACILITIES ENGINEERING COMMAND
DEPARTMENT OF THE NAVY
NAVY PUBLIC WORKS CENTER, JACKSONVILLE, FL
U.S. NAVAL STATION ROOSEVELT ROADS, P.R.
REPAIRS TO NAVAL HOSPITAL
SECTIONS & DETAILS

PLATE NO.
A8-6

PWC # XXXXX

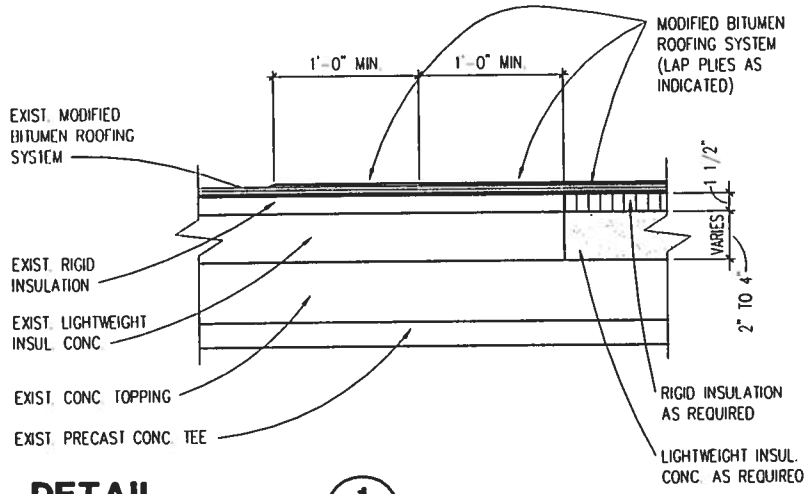

DETAIL 1
SCALE: 1 1/2" = 1'-0" A2-4 | A8-7

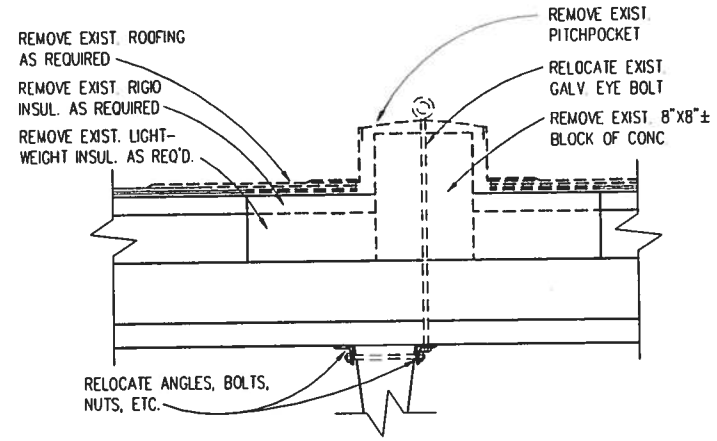

DETAIL 2
SCALE: 1 1/2" = 1'-0" A1-4 | A8-7

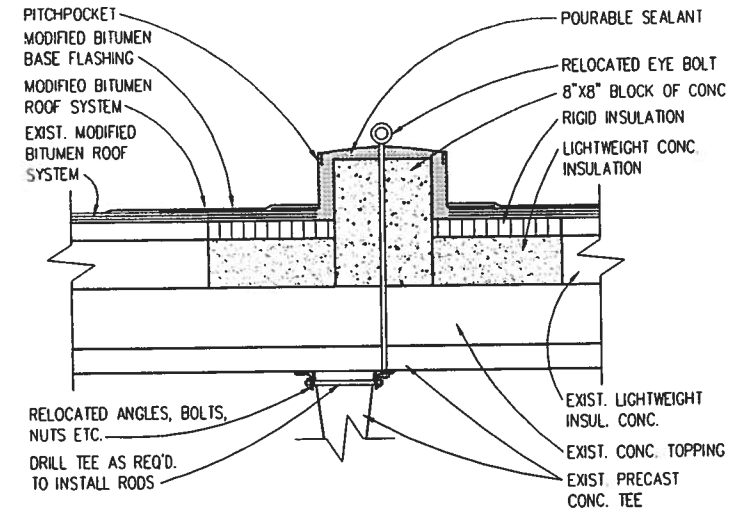

DETAIL 3
SCALE: 1 1/2" = 1'-0" A2-4 | A8-7

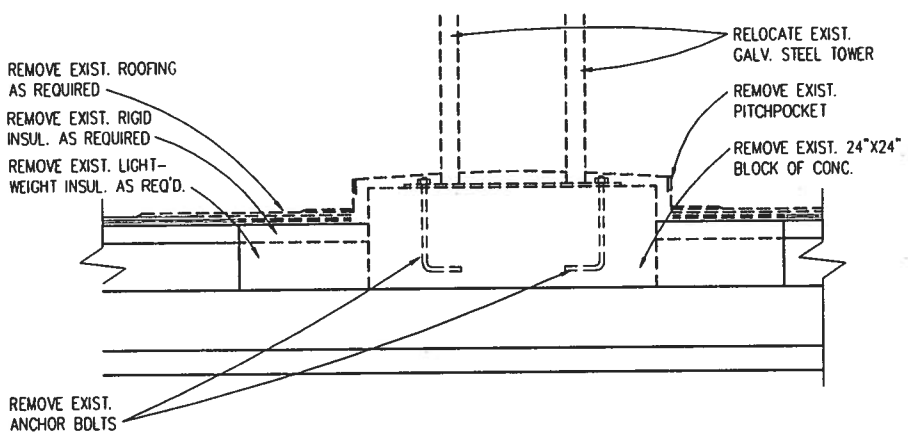

DETAIL 4
SCALE: 1 1/2" = 1'-0" A1-4 | A8-7

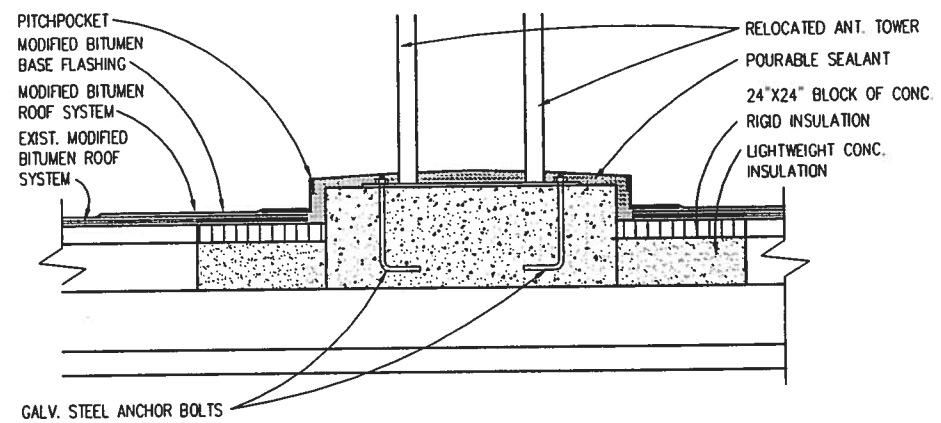

DETAIL 5
SCALE: 1 1/2" = 1'-0" A2-4 | A8-7

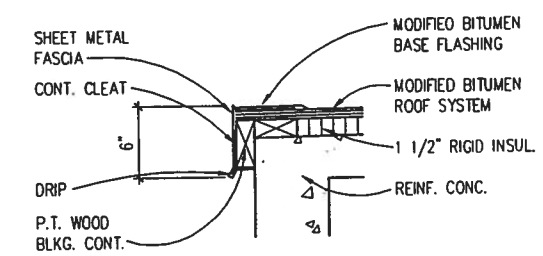

DETAIL 6
SCALE: 1 1/2" = 1'-0" A2-4 | A8-7

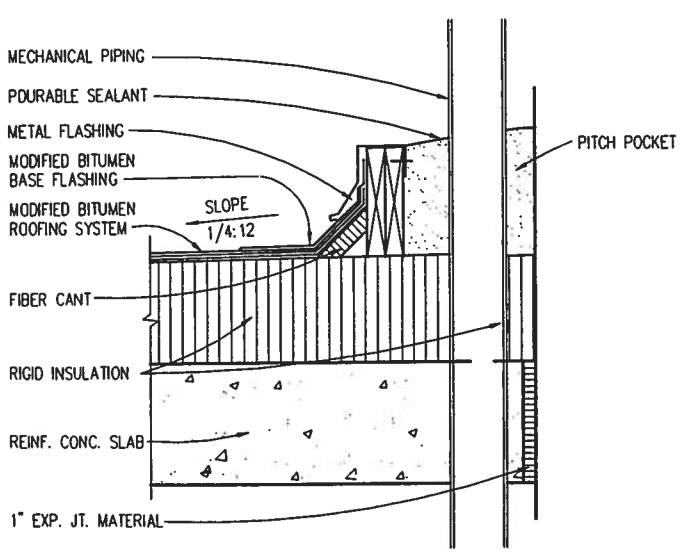

DETAIL 7
SCALE: 1 1/2" = 1'-0" A6-1 | A8-7

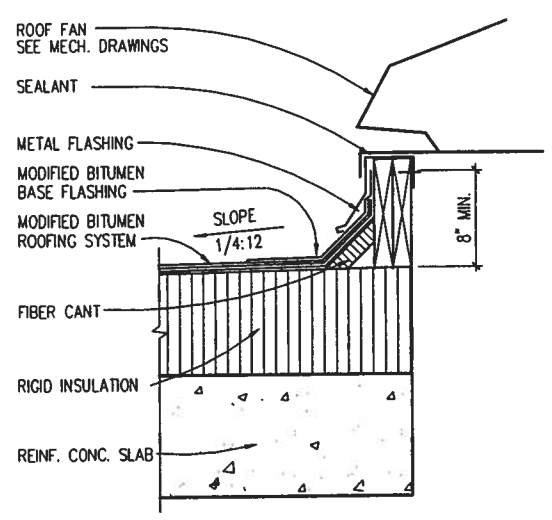

DETAIL 8
SCALE: 1 1/2" = 1'-0" A2-4 | A8-7

0 3" 6" 9" 1' 6" 2' 6" 3'
GRAPHIC SCALE
1 1/2"=1'-0"

0 1' 2' 3' 4' 5' 6' 7'
GRAPHIC SCALE
1/2"=1'-0"

SHERLOCK, SMITH & ADAMS, INC.
ARCHITECTS – ENGINEERS
MONTGOMERY, ALABAMA

U.S. NAVAL STATION ROOSEVELT ROADS, P.R.
REPAIRS TO NAVAL HOSPITAL
SECTIONS & DETAILS

CONSTR. CONTR. NO.	SPECIFICATION NO.	NAVFAC DRWG. NO.	TF NO. XXXXX
XXXXX	XXXXX	XXXXX	SHEET ? OF ??

DRAWN BY: FLT
DESIGN BY: RAS
ENG. DIV. DR.: DATE
SATISFACTORY TO: DATE
REVISION DESCRIPTION DATE

NAVAL FACILITIES ENGINEERING COMMAND
DEPARTMENT OF THE NAVY
NAVY PUBLIC WORKS CENTER, JACKSONVILLE, FL
U.S. NAVAL STATION ROOSEVELT ROADS, P.R.
REPAIRS TO NAVAL HOSPITAL
SECTIONS & DETAILS

PLATE NO.
A8-7

PWC # XXXXX

NOTE:

1. REMOVE PORTION OF EXISTING SUSPENDED METAL PAN CEILING AS REQUIRED BY ELECTRICAL WORK. STORE AND REINSTALL CEILING AFTER ELECTRICAL WORK COMPLETED.

REFLECTED CEILING LEGEND

EXP. CONC.	EXPOSED CONCRETE
	NEW 2x2 SUSPENDED ACOUSTICAL CEILING
	NEW GYPSUM BOARD CEILING
	NEW 2x4 FLUORESCENT FIXTURE
	NEW 1x4 FLUORESCENT FIXTURE
	NEW 2x4 FLUORESCENT FIXTURE
	NEW CAN LIGHT
	NEW EXIT SIGN
	NEW SMOKE DETECTOR
	NEW SPEAKER
	NEW NURSES CALL LIGHT
	EXSTING 2x2 SUSPENDED ACOUSTICAL CEILING
	EXSTING 2x4 SUSPENDED ACOUSTICAL CEILING
	EXISTING 2x4 FLUORESCENT FIXTURE
	EXISTING 1x4 FLUORESCENT FIXTURE
	EXISTING CAN LIGHT
	EXISTING EXIT SIGN
	EXISTING SMOKE DETECTOR
	EXISTING SPEAKER
	EXISTING NURSES CALL LIGHT
8'-0"	CEILING HEIGHT
	CEILING MOUNTED CURTAIN TRACK

THESE ITEMS TO BE REMOVED, STORED AND REINSTALLED.

NOTE: SEE DEMOLITION PLANS, MECHANICAL AND ELECTRICAL DRAWINGS FOR FURTHER INFORMATION.

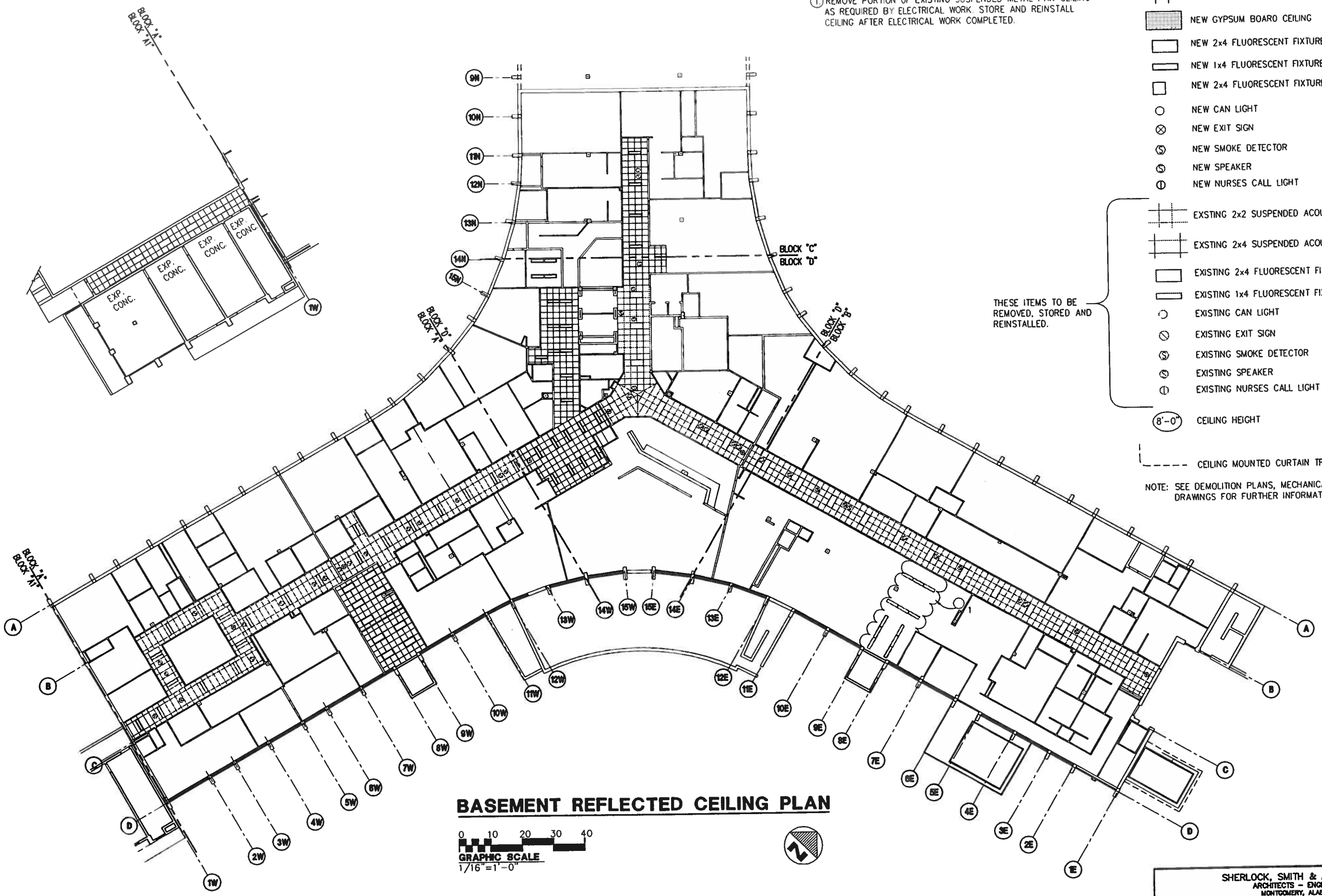

BASEMENT REFLECTED CEILING PLAN

0 10 20 30 40
GRAPHIC SCALE
1/16"=1'-0"

SHERLOCK, SMITH & ADAMS, INC.
ARCHITECTS - ENGINEERS
MONTGOMERY, ALABAMA

U.S. NAVAL STATION ROOSEVELT ROADS, P.R.
REPAIRS TO NAVAL HOSPITAL
BASEMENT REFLECTED CEILING PLAN

CONSTR. CONTR. NO.	SPECIFICATION NO.	NAVFAC DRWG. NO.	TF NO. XXXXX
XXXXX	XXXXX	XXXXX	SHEET ? OF ??

DEPARTMENT OF THE NAVY
NAVY PUBLIC WORKS CENTER, JACKSONVILLE, FL
NAVAL FACILITIES ENGINEERING COMMAND

U.S. NAVAL STATION ROOSEVELT ROADS, P.R.
REPAIRS TO NAVAL HOSPITAL
BASEMENT REFLECTED CEILING PLAN

DESIGN BY: RAS DRAWN BY: FLT

ENG. DIV. DR.: DATE: SATISFACTORY TO: DATE:

REVISION DESCRIPTION DATE

PLATE NO. A9-1

PWC # XXXXX

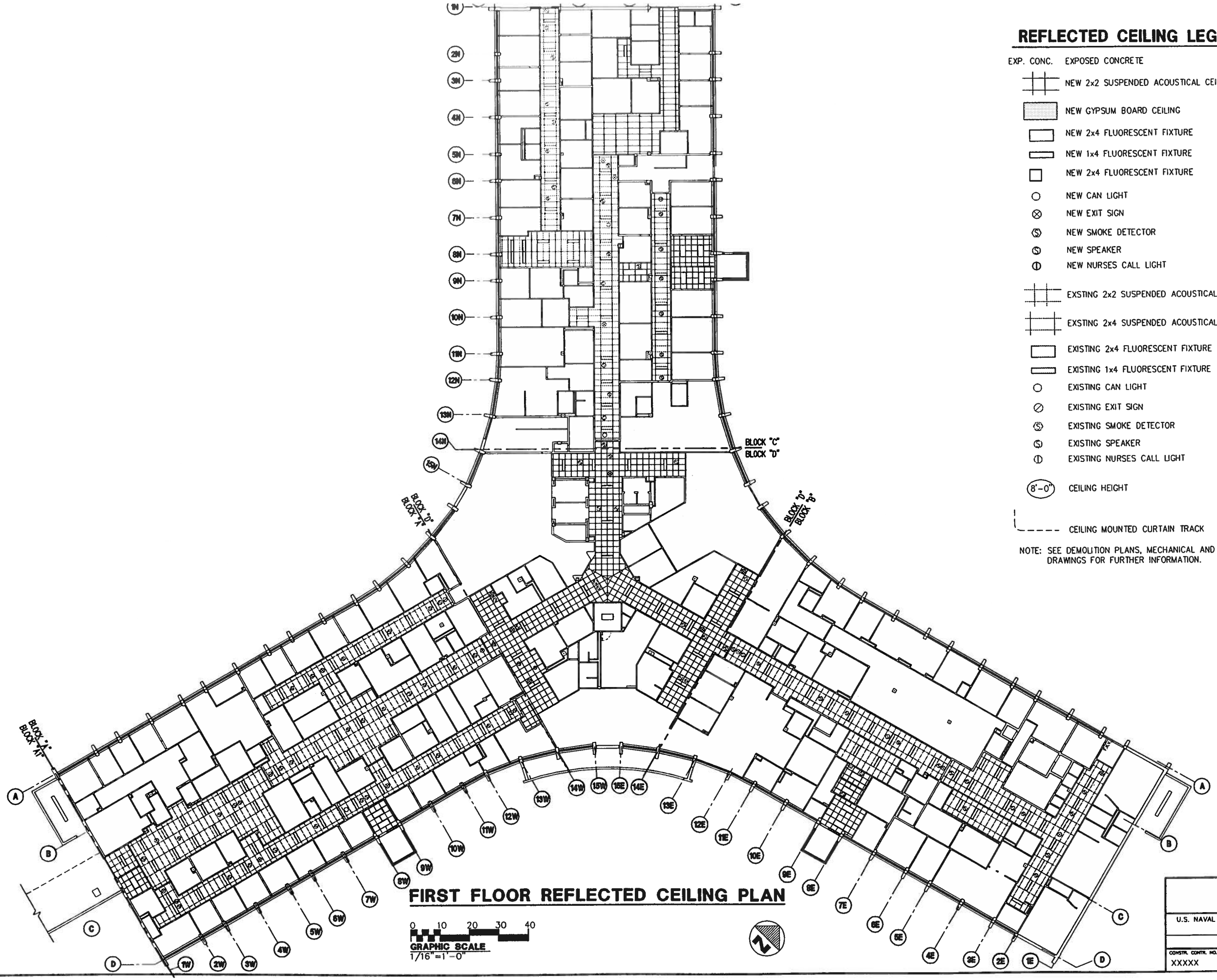

FIRST FLOOR REFLECTED CEILING PLAN

GRAPHIC SCALE
0 10 20 30 40
1/16" = 1'-0"

REFLECTED CEILING LEGEND

EXP. CONC. EXPOSED CONCRETE

NEW 2x2 SUSPENDED ACOUSTICAL CEILING

NEW GYPSUM BOARD CEILING

NEW 2x4 FLUORESCENT FIXTURE

NEW 1x4 FLUORESCENT FIXTURE

NEW 2x4 FLUORESCENT FIXTURE

NEW CAN LIGHT

NEW EXIT SIGN

NEW SMOKE DETECTOR

NEW SPEAKER

NEW NURSES CALL LIGHT

EXSTING 2x2 SUSPENDED ACOUSTICAL CEILING

EXSTING 2x4 SUSPENDED ACOUSTICAL CEILING

EXISTING 2x4 FLUORESCENT FIXTURE

EXISTING 1x4 FLUORESCENT FIXTURE

EXISTING CAN LIGHT

EXISTING EXIT SIGN

EXISTING SMOKE DETECTOR

EXISTING SPEAKER

EXISTING NURSES CALL LIGHT

THESE ITEMS TO BE REMOVED, STORED AND REINSTALLED.

8'-0" CEILING HEIGHT

CEILING MOUNTED CURTAIN TRACK

NOTE: SEE DEMOLITION PLANS, MECHANICAL AND ELECTRICAL DRAWINGS FOR FURTHER INFORMATION.

SHERLOCK, SMITH & ADAMS, INC.
ARCHITECTS - ENGINEERS
MONTGOMERY, ALABAMA

U.S. NAVAL STATION ROOSEVELT ROADS, P.R.
REPAIRS TO NAVAL HOSPITAL
FIRST FLOOR REFLECTED CEILING PLAN

CONSTR. CONTR. NO.	SPECIFICATION NO.	NAVFAC DRWG. NO.	TF NO. XXXXX
XXXXX	XXXXX	XXXXX	SHEET ? OF ??

DRAWN BY: G.T.
INTERIM REV. D.I.C.
ENG. DIV. DR.: ____
DATE: ____
SATISFACTORY TO: ____
DATE: ____

REVISION DESCRIPTION	DATE

NAVAL FACILITIES ENGINEERING COMMAND
DEPARTMENT OF THE NAVY
NAVY PUBLIC WORKS CENTER, JACKSONVILLE, FL
U.S. NAVAL STATION ROOSEVELT ROADS, P.R.
REPAIRS TO NAVAL HOSPITAL
FIRST FLOOR REFLECTED CEILING PLAN

PLATE NO.
A9-2

DWG. #

CUBICAL CURTAIN TRACK SUPPORT DETAIL

1 A9-3 | A9-3

SCALE: 3" = 1'-0"

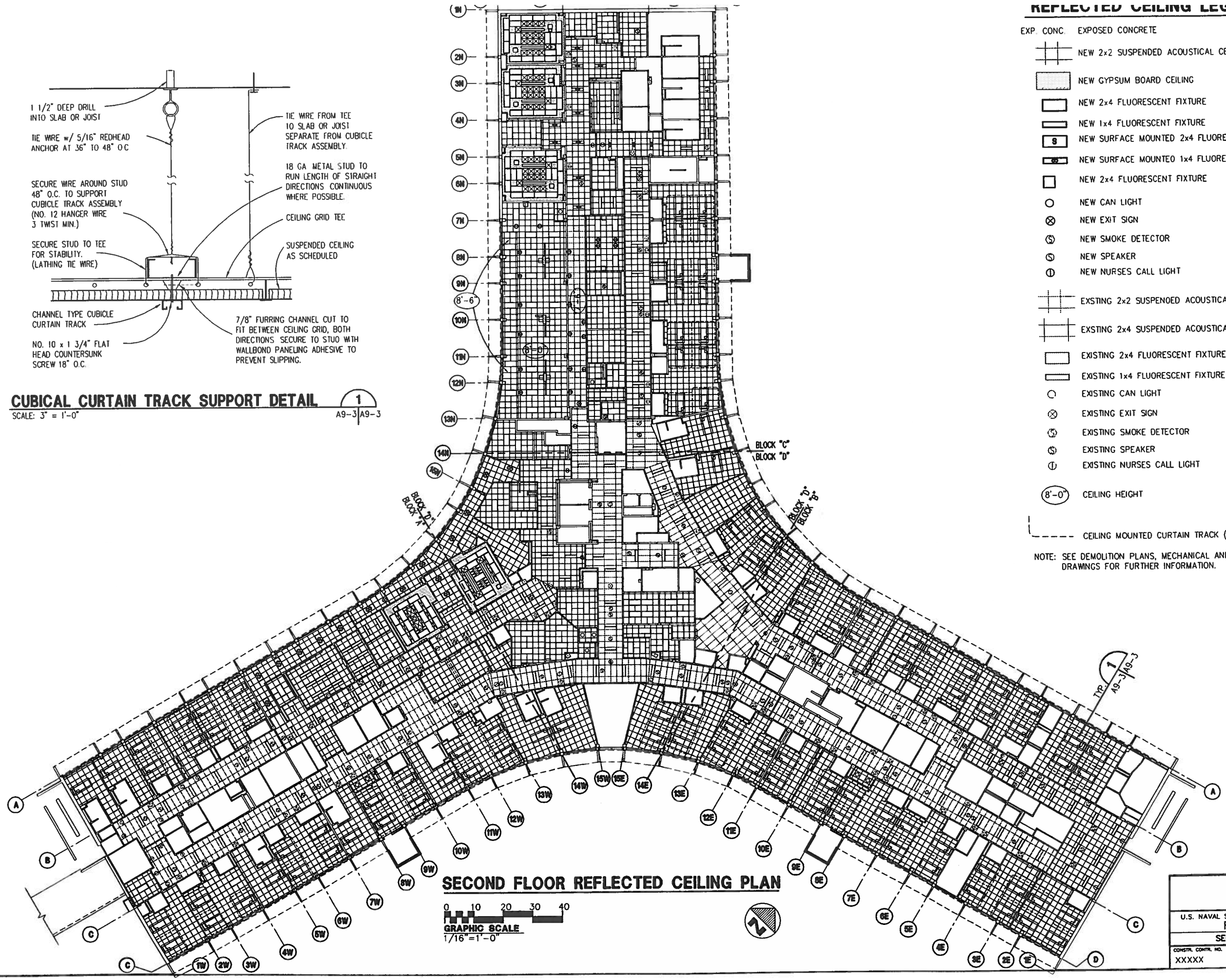

SECOND FLOOR REFLECTED CEILING PLAN

0 10 20 30 40

GRAPHIC SCALE
1/16"=1'-0"

REFLECTED CEILING LEGEND

EXP. CONC.	EXPOSED CONCRETE
	NEW 2x2 SUSPENDED ACOUSTICAL CEILING
	NEW GYPSUM BOARD CEILING
	NEW 2x4 FLUORESCENT FIXTURE
	NEW 1x4 FLUORESCENT FIXTURE
S	NEW SURFACE MOUNTED 2x4 FLUORESCENT FIXTURE
	NEW SURFACE MOUNTED 1x4 FLUORESCENT FIXTURE
	NEW 2x4 FLUORESCENT FIXTURE
	NEW CAN LIGHT
	NEW EXIT SIGN
	NEW SMOKE DETECTOR
	NEW SPEAKER
	NEW NURSES CALL LIGHT
	EXSTING 2x2 SUSPENDED ACOUSTICAL CEILING
	EXSTING 2x4 SUSPENDED ACOUSTICAL CEILING
	EXISTING 2x4 FLUORESCENT FIXTURE
	EXISTING 1x4 FLUORESCENT FIXTURE
	EXISTING CAN LIGHT
	EXISTING EXIT SIGN
	EXISTING SMOKE DETECTOR
	EXISTING SPEAKER
	EXISTING NURSES CALL LIGHT
8'-0"	CEILING HEIGHT
	CEILING MOUNTED CURTAIN TRACK (SEE 1/A9-3)

THESE ITEMS TO BE REMOVED, STORED AND REINSTALLED.

NOTE: SEE DEMOLITION PLANS, MECHANICAL AND ELECTRICAL DRAWINGS FOR FURTHER INFORMATION.

SHERLOCK, SMITH & ADAMS, INC.
ARCHITECTS – ENGINEERS
MONTGOMERY, ALABAMA

U.S. NAVAL STATION — ROOSEVELT ROADS, P.R.
REPAIRS TO NAVAL HOSPITAL
SECOND FLOOR REFLECTED CEILING PLAN

CONSTR. CONTR. NO.	SPECIFICATION NO.	NAVFAC DRWG. NO.	TF NO.
XXXXX	XXXXX	XXXXX	XXXXX
			SHEET ? OF ??

DEPARTMENT OF THE NAVY — NAVAL FACILITIES ENGINEERING COMMAND
NAVY PUBLIC WORKS CENTER, JACKSONVILLE, FL
U.S. NAVAL STATION — ROOSEVELT ROADS, P.R.
REPAIRS TO NAVAL HOSPITAL
SECOND FLOOR REFLECTED CEILING PLAN

DESIGN BY: RAS — DRAWN BY: FLT

ENG. DIV. DIR.: — DATE: — SATISFACTORY TO: — DATE:

REVISION DESCRIPTION — DATE

PLATE NO. A9-3

THE FOLLOWING CONCRETE COVER SHALL BE PROVIDED FOR REINFORCEMENT UNLESS OTHERWISE SHOWN ON THE DRAWINGS.	
STRUCTURAL ELEMENT	COVER
CONCRETE CAST AGAINST AND PERMANENTLY EXPOSED TO EARTH	3"
CONCRETE EXPOSED TO EARTH OR WEATHER:	
#6 OR LARGER	2"
#5 BARS OR SMALLER	1½"
CONCRETE NOT EXPOSED TO WEATHER OR CONTACT WITH GROUND	
SLABS, WALLS, JOISTS	
#14 AND #18 BARS	1½"
#11 BARS OR SMALLER	¾"
BEAMS, COLUMNS	
PRIMARY REINFORCEMENT	1½"
TIES, STIRRUPS, SPIRALS	1½"

CAST IN PLACE CONCRETE COVER FOR REINFORCING BARS

1 / S1-1

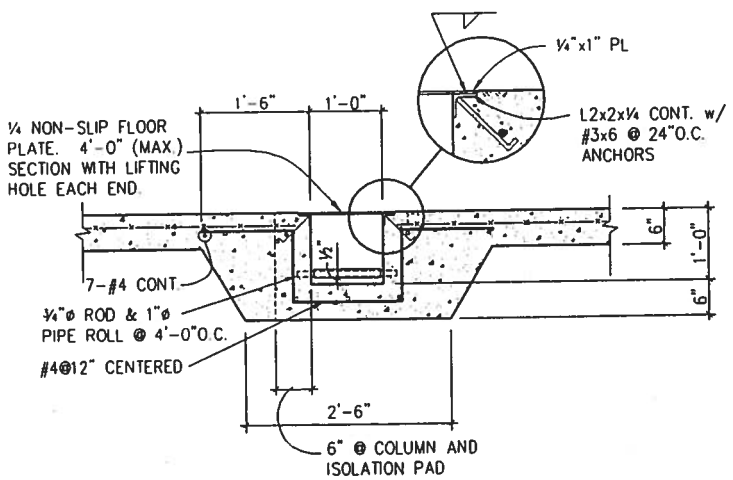

TYPICAL TRENCH DETAIL

3 / S2-1 | S1-1

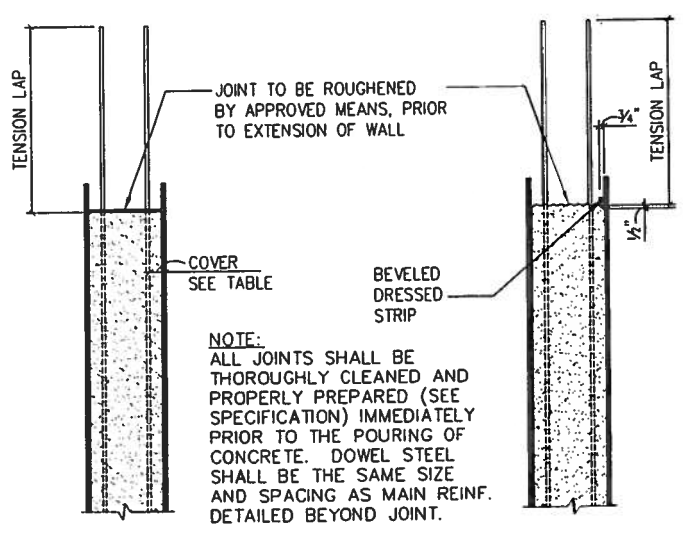

VERTICAL JOINT HORIZONTAL JOINT

TYPICAL CONCRETE WALL CONSTRUCTION JOINT DETAILS

5 / S1-1

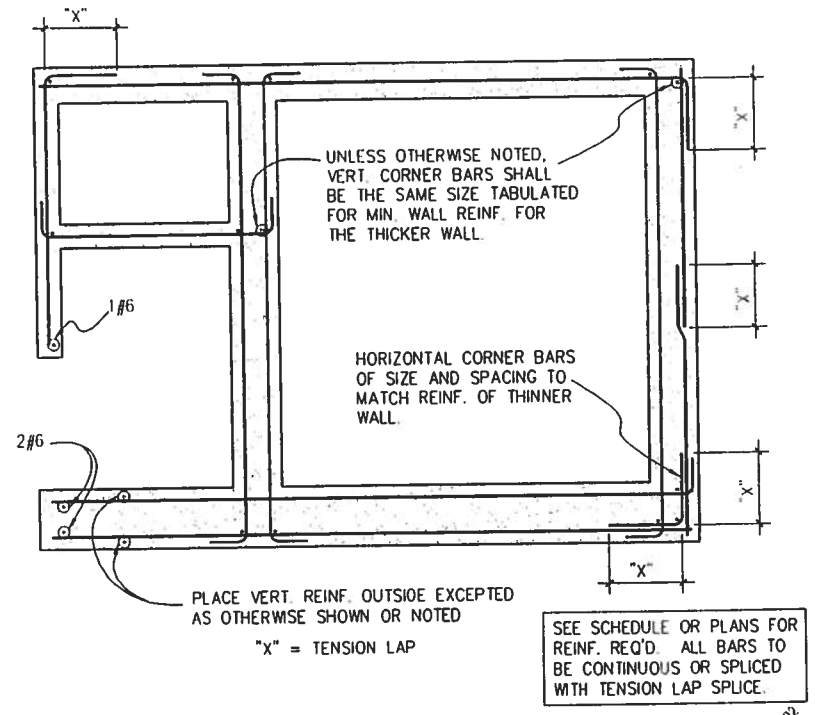

TYPICAL WALL REINFORCING DETAILS

PLAN SECTION

2 / S1-1

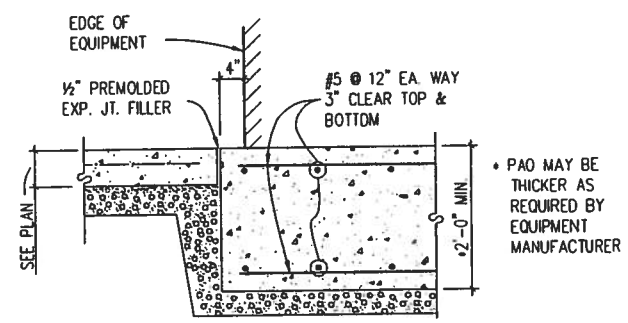

ISOLATION PAD DETAIL

4 / S2-1 | S1-1

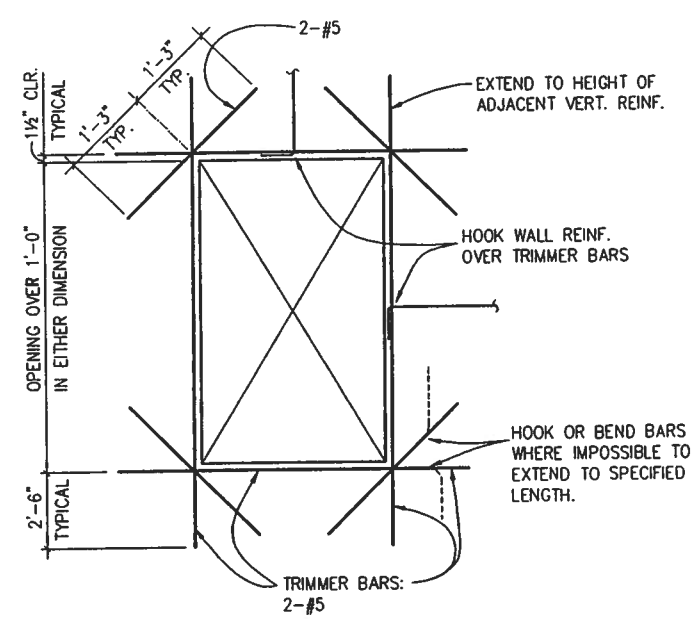

TYPICAL REINFORCING AT WALL OPENINGS

6 / S1-1

GENERAL STRUCTURAL NOTES

A. DESIGN CRITERIA

1. DESIGN CRITERIA
   - MIL-HDBK 1002/1 - STRUCTURAL ENGINEERING GENERAL REQUIREMENTS
   - MIL-HDBK 1002/2 - LOADS, EXCEPT WIND, ASCE 7-88 SECTION 6
   - MIL-HDBK 1002/3 - STEEL STRUCTURES
   - DM-2.04 - CONCRETE STRUCTURES
   - NAVFAC P-355 - SEISMIC DESIGN FOR BUILDINGS
   - BUILDING CODE REQUIREMENTS FOR REINFORCED CONCRETE - ACI 318-89
   - MANUAL OF STEEL CONSTRUCTION - AISC NINTH EDITION (ASD)
   - SPECIFICATION FOR STRUCTURAL STEEL BUILDINGS, JUNE 1, 1989.
2. DESIGN LOADS:
   - SEISMIC - ZONE 3
   - WIND - 95 MPH, EXPOSURE C
   - ROOF LIVE LOAD - 20 PSF
3. MINIMUM ALLOWABLE SOIL BEARING PRESSURE SHALL BE 2000 PSF AS NOTED IN SOILS REPORT BY GEOENGINEERING, 2-27-96.
4. NO PROVISION HAS BEEN MADE FOR EQUIPMENT LOADS EXCEPT AS SHOWN. ANY ADDITIONAL LOADS OR CHANGES IN EQUIPMENT LOADS SHALL BE NOTED ON SHOP DRAWING SUBMITTAL FOR MATERIALS AFFECTED

B. GENERAL REQUIREMENTS AND CONDITIONS

1. TYPICAL CONDITIONS: WHERE A SECTION OR DETAIL IS SHOWN FOR ONE CONDITION, IT SHALL APPLY TO ALL LIKE OR SIMILAR CONDITIONS EVEN THOUGH NOT SPECIFICALLY MARKED ON THE PLANS.
2. REFER TO ARCHITECTURAL, MECHANICAL, PLUMBING, AND ELECTRICAL DRAWINGS FOR SLEEVES, OPENINGS, ANCHOR BOLTS AND INSERTS, EMBEDDED ITEMS OTHER THAN REINFORCING STEEL, ANCHORAGE FOR ATTACHMENT OF NON-STRUCTURAL ITEMS, ETC., WHICH ARE NOT SHOWN ON STRUCTURAL DRAWINGS
3. REFER TO CIVIL DRAWINGS FOR UTILITY STRUCTURES, CURB & GUTTER, WALKS, AND OTHER STRUCTURES OUTSIDE THE BUILDING LINE NOT SHOWN HERE WHICH REQUIRE REINFORCED CONCRETE WORK.
4. DIMENSIONS SHOWN TO EXISTING CONSTRUCTION ARE APPROXIMATE AND ARE BASED ON EXISTING CONSTRUCTION DRAWINGS. DIMENSIONS SHOWN ARE NOT FIELD MEASURED DIMENSIONS. CONTRACTOR SHALL FIELD VERIFY ALL DIMENSIONS, ELEVATIONS, AND GEOMETRY AT EXISTING CONSTRUCTION
5. ALL WORK SHOWN WITH SCREENED (I.E. SUBDUED, NOT BOLD) LINES DEPICTS EXISTING CONSTRUCTION.

C. CONCRETE

1. ALL CONCRETE SHALL BE NORMAL WEIGHT, W = 145 PCF, f'c =3000 PSI AT 28 DAYS, MINIMUM. FURNISH MATERIALS, MIX, PLACE, FINISH, AND CURE ALL CONCRETE IN ACCORDANCE WITH ACI 318-89, ACI 301-89 AND THE PROJECT SPECIFICATIONS.
2. CONCRETE REINFORCING BAR COVER SHALL BE AS INDICATED IN TABLE "CAST IN PLACE CONCRETE COVER FOR REINFORCING BARS".
3. CONTRACTION JOINTS FOR SLABS ON GRADE SHALL BE FORMED BY SAW CUTS THE SAME DAY AS PLACEMENT AS SOON AS POSSIBLE AFTER SLAB FINISHING AS MAY BE SAFELY DONE WITHOUT DISLODGING AGGREGATE, WITHOUT DAMAGING THE CONCRETE, AND IN NO CASE LATER THAN 12 HOURS AFTER PLACEMENT.
4. SLOPE FLOORS AS INDICATED ON ARCHITECTURAL DRAWINGS.

D. REINFORCING STEEL

1. ALL REINFORCING STEEL SHALL BE NEW BILLET-STEEL DEFORMED BARS CONFORMING TO ASTM A615 GRADE 60, (Fy=60 ksi). DETAILING OF REINFORCING SHALL BE IN ACCORDANCE WITH ACI DETAILING MANUAL ACI SP-66(88)(SUPERSEDES ACI 315).
2. LAP SPLICE REINFORCING STEEL 30 BAR DIAMETERS MINIMUM AT LOCATIONS INDICATED OR AS APPROVED ON SHOP DRAWINGS. PROVIDE CORNER BARS MATCHING REINFORCING SIZE FOR CONTINUOUS FOOTING AND BOND BEAM REINFORCING.
3. WELDED WIRE FABRIC SHALL CONFORM TO ASTM A185. LAP 8" MINIMUM AND TWO CROSS WIRES ON EACH SHEET ALL SIDES. LACE SPLICES WITH WIRE.

E. STRUCTURAL STEEL

1. DESIGN, FABRICATION, AND ERECTION OF STRUCTURAL STEEL SHALL BE IN ACCORDANCE WITH THE AMERICAN INSTITUTE OF STEEL CONSTRUCTION, "SPECIFICATION FOR STRUCTURAL STEEL BUILDINGS", JUNE 1, 1989. (AISC ASD MANUAL, 9TH EDITION).
2. ALL STRUCTURAL STEEL SHAPES AND PLATES SHALL BE ASTM A 36 (Fy=36 KSI).
3. WELDING ELECTRODES SHALL BE E70.

F. COLD-FORMED METAL FRAMING (STEEL JOISTS)

1. 8" - 16 GAUGE STEEL JOISTS FOR PENTHOUSE ROOF FRAMING SHALL BE GALVANIZED AND HAVE THE FOLLOWING PROPERTIES: Fy=50 KSI, THICKNESS=0.0568 IN., AREA=0.7176, Ix=6.4507 IN 4, Iy=0.3371. JOISTS SHALL HAVE SOLID WEBS (NOT PUNCHED) AND A MIN. 2" FLANGE WITH 9/16" RETURN LIPS. MEMBER DESIGN IS BASED ON AISI CODE AND CHARTS PROVIDED BY DALE//INCOR.

G. STEEL DECK

1. STEEL DECK SHALL BE 1-1/2" DEEP, 22 GAUGE, TYPE IR, GALVANIZED STEEL DECKING CONFORMING TO ASTM A446, GRADE A, (Fy=33KSI), G 90. MINIMUM PROPERTIES PER FOOT WIDTH: I=0.121IN4, S=0.112IN3.
2. INSTALL STEEL DECK IN LENGTHS TO ALLOW FOR THREE SPANS MINIMUM PER SHEET.

H. CONCRETE MASONRY

1. CONCRETE MASONRY UNITS SHALL BE HOLLOW LOAD BEARING TYPE CONFORMING TO ASTM C90, TYPE I, GRADE N. PROVIDE UNIT MASONRY THAT DEVELOPS f'm=1500 PSI, MIN. INSTALLED COMPRESSIVE STRENGTH AT 28 DAYS.
2. MORTAR SHALL BE ASTM C270, TYPE S.
3. BRACE ALL WALLS DURING CONSTRUCTION TO RESIST WIND LOADS.
4. ADHESIVE ANCHORS FOR STEEL TO CMU CONNECTIONS SHALL BE HILTI HIT C-20 SYSTEM WITH ADHESIVE, SCREEN, AND ALL THREADED ROD OR APPROVED EQUAL. INSTALL ANCHORS PER MANUFACTURER'S WRITTEN INSTRUCTIONS.
5. STEEL REINFORCEMENT SHALL RUN CONTINUOUS AT ALL TOP OF WALL BOND BEAMS THROUGH CONTROL JOINTS (C.J. ON ARCHITECTURAL DRAWINGS.)

I. FUTURE EXPANSION

1. THIS STRUCTURAL DESIGN INCLUDES NO PROVISIONS FOR FUTURE EXPANSION.

SHERLOCK, SMITH & ADAMS, INC.
ARCHITECTS - ENGINEERS
MONTGOMERY, ALABAMA

U.S. NAVAL STATION ROOSEVELT ROADS, P.R.
REPAIRS TO NAVAL HOSPITAL
TYPICAL DETAILS & GENERAL NOTES

CONSTR. CONTR. NO.	SPECIFICATION NO.	NAVFAC DRWG. NO.	TF NO. XXXXX
XXXXX	XXXXX	XXXXX	SHEET OF ??

ENG. DIV. DIR. / DATE / S.H.&A. / DATE / DRAWN BY: NSP / DESIGN BY: EKG

REVISION DESCRIPTION / DATE

NAVAL FACILITIES ENGINEERING COMMAND
DEPARTMENT OF THE NAVY
NAVY PUBLIC WORKS CENTER, JACKSONVILLE, FL
U.S. NAVAL STATION ROOSEVELT ROADS, P.R.
REPAIRS TO NAVAL HOSPITAL
TYPICAL DETAILS & GENERAL NOTES

PLATE NO. S1-1

PWC # XXXXX

P:\95-113\ST\113S0101.dwg, (0.5|1), 05/03/96 at 13:23:17 by PITTMAN_S

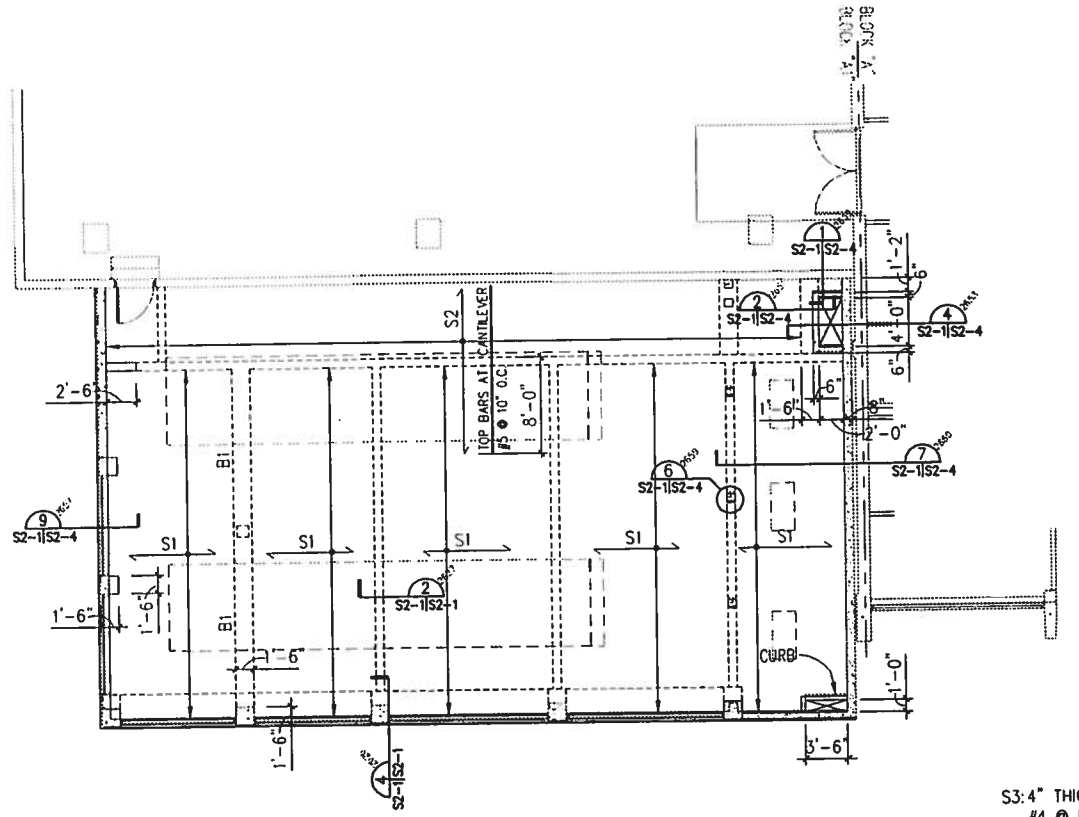

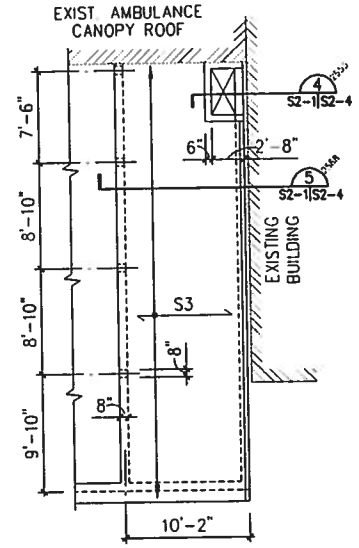

S1: 10" THICK FLAT SLAB REINFORCED WITH #5 @ 12" O.C. BOTTOM, #5 @ 16" O.C. (TEMP), & #5 @ 10" O.C. TOP. SPLICE BOTTOM BARS AT SUPPORT ONLY, LAP 26". SPLICE TOP BARS AT MIDSPAN ONLY, LAP 26". PROVIDE 180° STD. HOOK AT ENDS. TILT OVER TO PROVIDE BAR CLEARANCE.

S2: 10" THICK FLAT SLAB REINFORCED WITH #5 @ 12" O.C. BOTTOM, #5 @ 16"O.C. (TEMP) & #5 @ 10" O.C. TOP. EXTEND TEMP REINF. FROM S1, LAP BOTTOM BARS AT WALLS 26". EXTEND TOP BARS AT CANTILEVER 8'-0" BEYOND SUPPORT WALL.

S3: 4" THICK FLAT SLAB REINF. w/#4 @ 12" O.C. TOP, #4 @ 12" O.C. BOTTOM, #3 @ 14" O.C. (TEMP).

UTILITY ADDITION MECHANICAL LEVEL (ROOF PLAN)
SCALE: 1/8"=1'-0"

ROOF PLAN
SCALE: 1/8"=1'-0"

MARK	SIZE "L x W"	THICKNESS "T"	REINFORCING
F65	6'-6" x 6'-6"	16	6-#6 E.W. BOTTOM
F70	7'-0" x 7'-0"	16	6-#6 E.W. BOTTOM
F75	7'-6" x 7'-6"	18	8-#6 E.W. BOTTOM
F80	8'-0" x 8'-0"	18	9-#6 E.W. BOTTOM

FOOTING SCHEDULE
NO SCALE

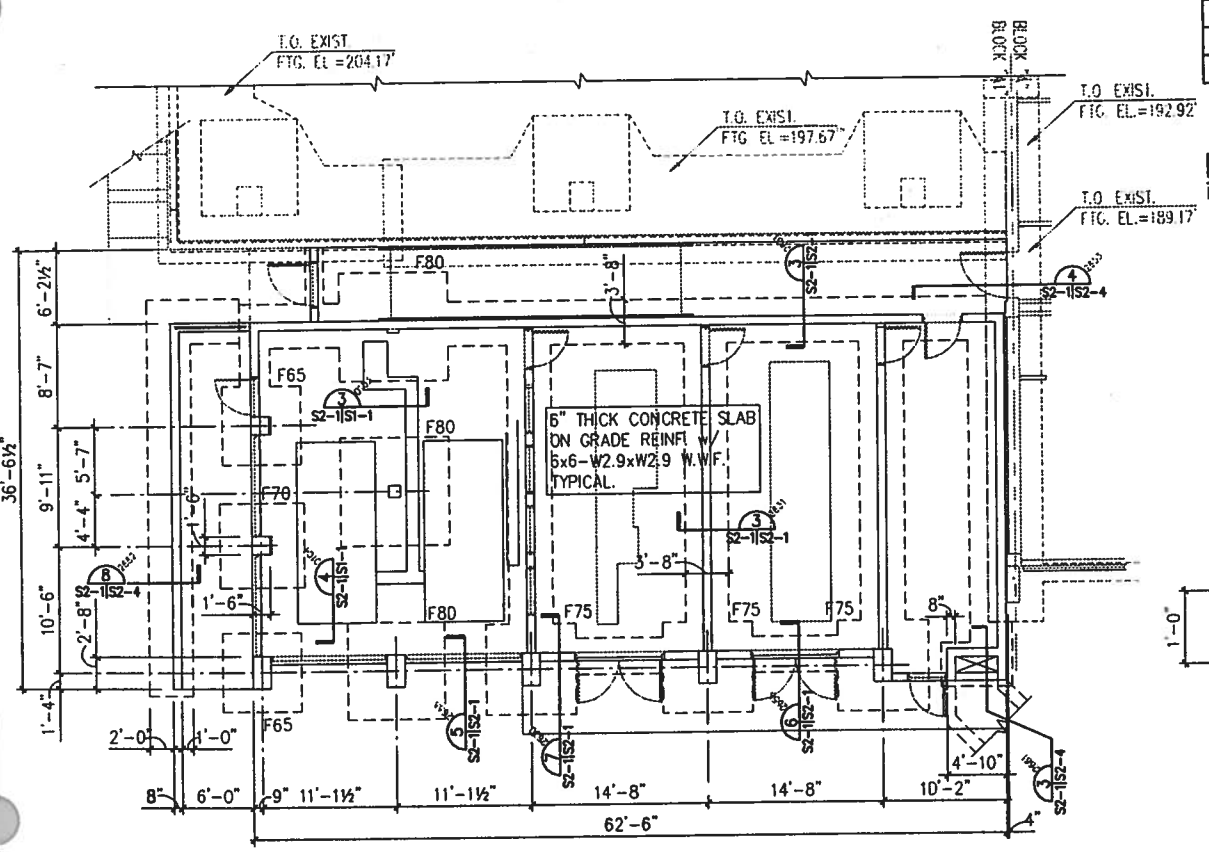

UTILITY ADDITION FOUNDATION PLAN
SCALE: 1/8"=1'-0"

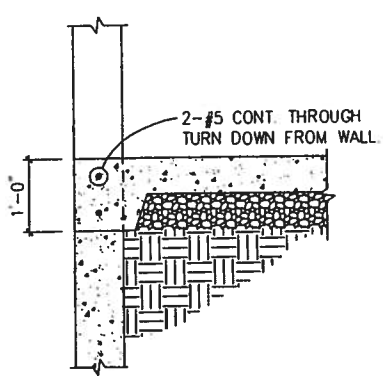

SECTION
SCALE: 3/4"=1'-0"
6 S2-1|S2-1

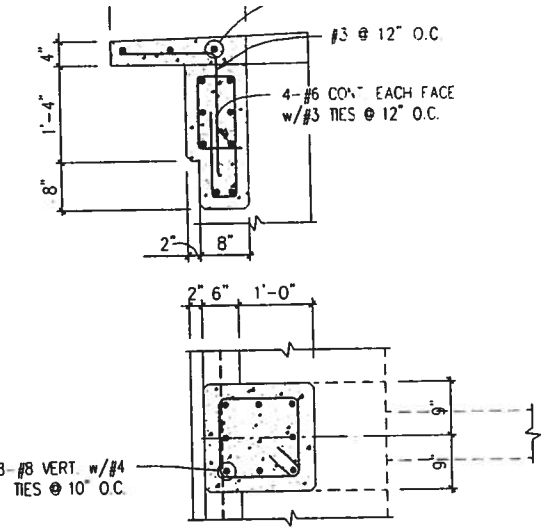

VIEW B-B

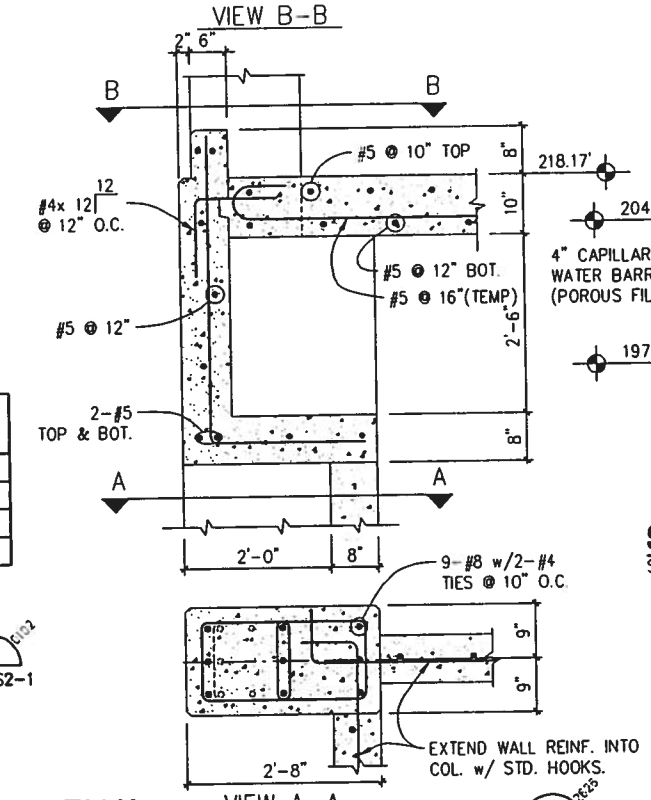

VIEW A-A

SECTION
SCALE: 3/4"=1'-0"
4 S2-1|S2-1

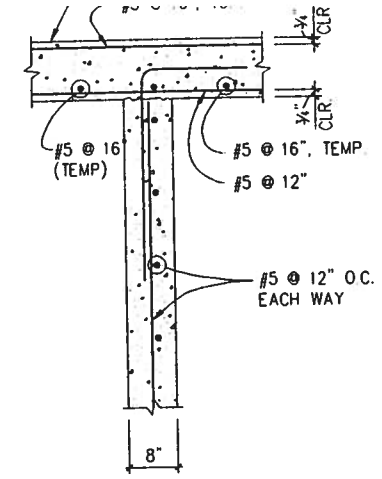

SECTION
SCALE: 3/4"=1'-0"
2 S2-1|S2-1

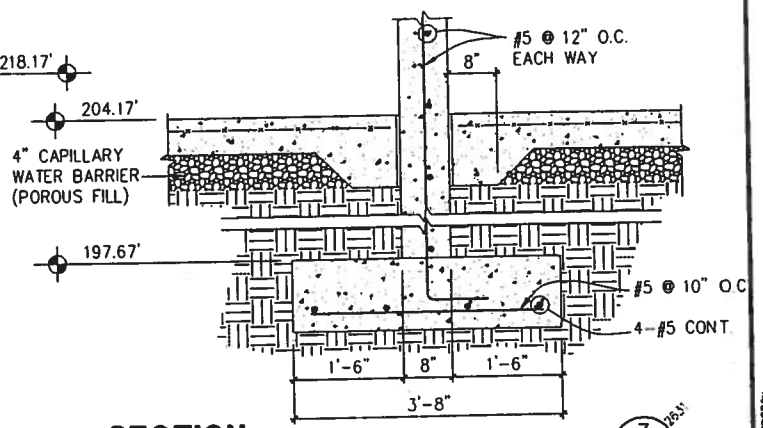

SECTION
SCALE: 3/4"=1'-0"
3 S2-1|S2-1

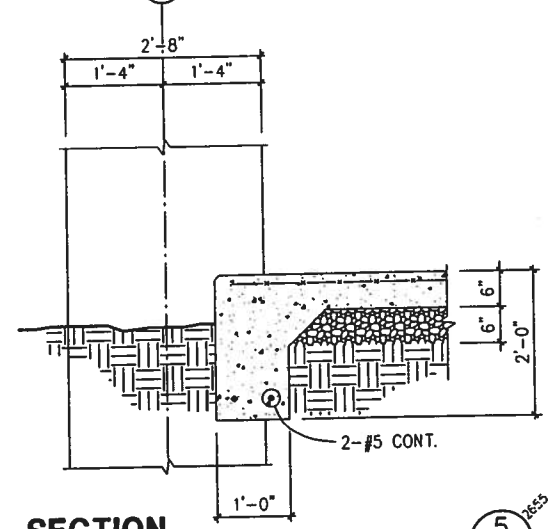

SECTION
SCALE: 3/4"=1'-0"
5 S2-1|S2-1

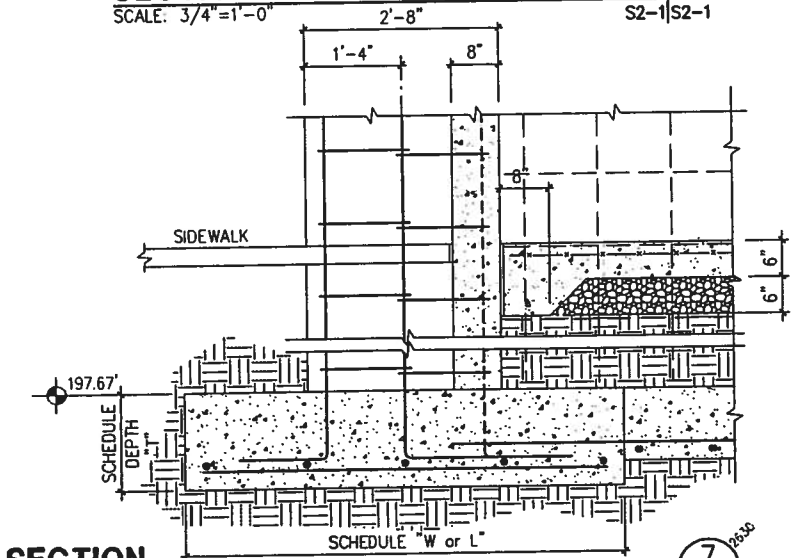

SECTION
SCALE: 3/4"=1'-0"
7 S2-1|S2-1

P:\95-113\ST\113S0201.dwg, (48|96), 05/03/96 at 16:47:09 by PITTMAN_S

SHERLOCK, SMITH & ADAMS, INC.
ARCHITECTS - ENGINEERS
MONTGOMERY, ALABAMA

U.S. NAVAL STATION ROOSEVELT ROADS, P.R.
REPAIRS TO NAVAL HOSPITAL
UTILITY ADDITION PLANS

CONSTR. CONTR. NO.	SPECIFICATION NO.	NAVFAC DRWG. NO.	TF NO. XXXXX
XXXXX	XXXXX	XXXXX	SHEET OF ??

DRAWN BY: NSP
DESIGN BY: EKG
CHIEF DIV. DIR. DATE
SATISFACTORY TO: DATE
REVISION DESCRIPTION DATE

NAVAL FACILITIES ENGINEERING COMMAND
DEPARTMENT OF THE NAVY
NAVY PUBLIC WORKS CENTER, JACKSONVILLE, FL
U.S. NAVAL STATION ROOSEVELT ROADS, P.R.
REPAIRS TO NAVAL HOSPITAL
UTILITY ADDITION PLANS

PLATE NO.
S2-1

DWG # XXXXX

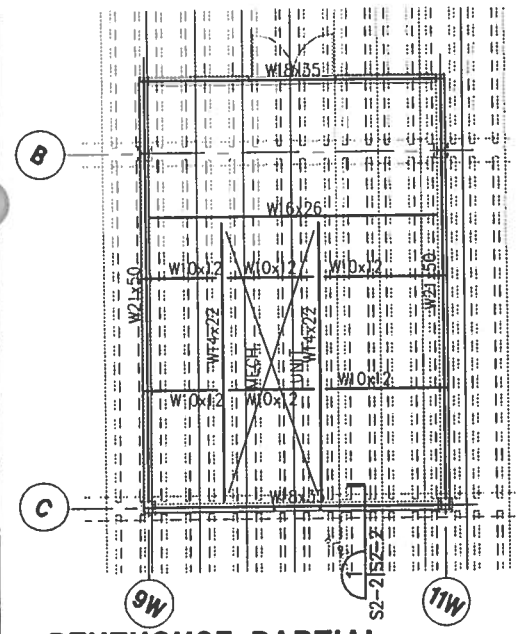

PENTHOUSE PARTIAL FRAMING PLAN BLOCK A
SCALE: 1/8"=1'-0"

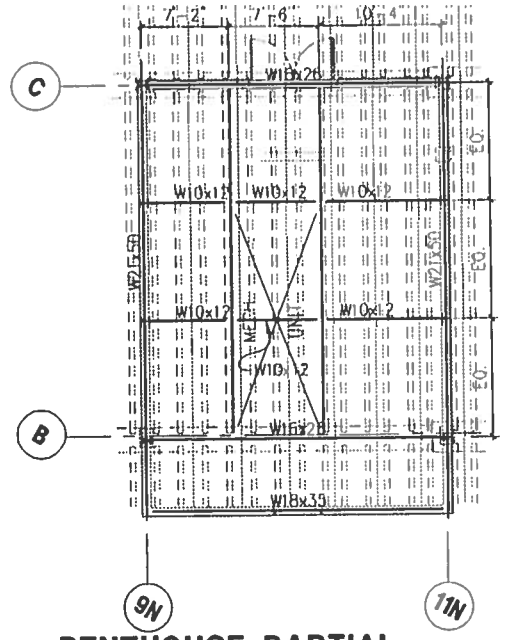

PENTHOUSE PARTIAL FRAMING PLAN BLOCK C
SCALE: 1/8"=1'-0"

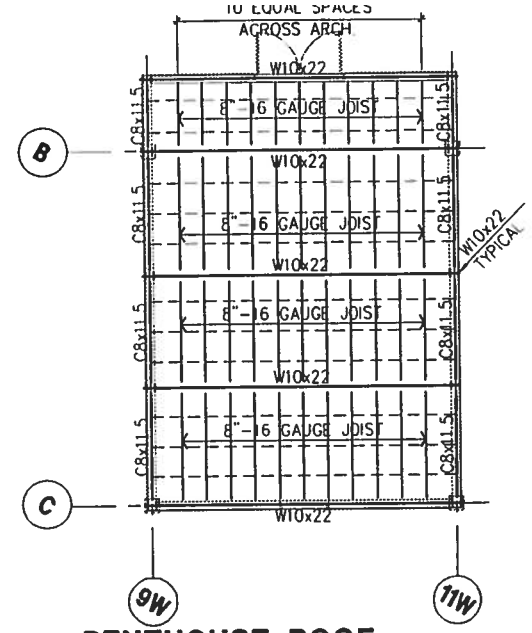

PENTHOUSE ROOF FRAMING PLAN BLOCK A
SCALE: 1/8"=1'-0"

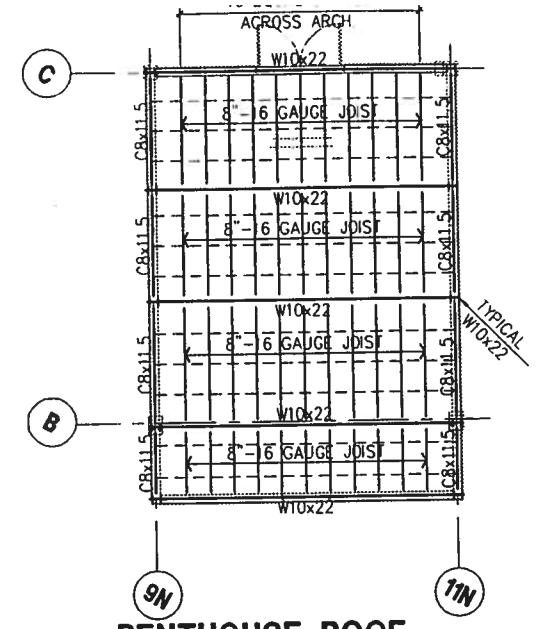

PENTHOUSE ROOF FRAMING PLAN BLOCK C
SCALE: 1/8"=1'-0"

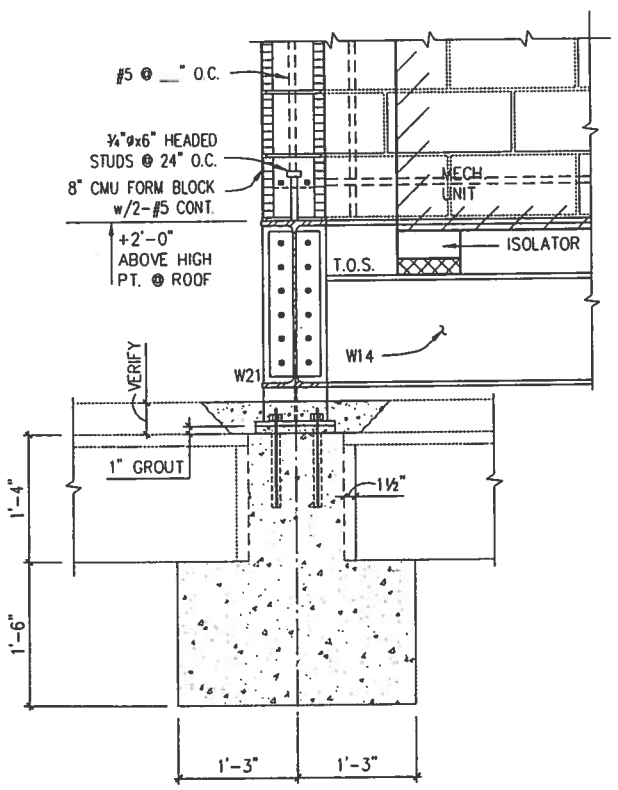

SECTION
SCALE: 1"=1'-0"
1 S2-2 | S2-2

P:\95-113\ST\113S0202.dwg, (48|96), 05/01/96 at 10:12:14 by PITTMAN_S

SHERLOCK, SMITH & ADAMS, INC.
ARCHITECTS – ENGINEERS
MONTGOMERY, ALABAMA

U.S. NAVAL STATION ROOSEVELT ROADS, P.R.
REPAIRS TO NAVAL HOSPITAL
PENTHOUSE FRAMING AND DETAILS

CONSTR. CONTR. NO.	SPECIFICATION NO.	NAVFAC DRWG. NO.	TF NO. XXXXX
XXXXX	XXXXX	XXXXX	SHEET OF ??

PLATE NO.
S2-2

DEPARTMENT OF THE NAVY
NAVY PUBLIC WORKS CENTER, JACKSONVILLE, FL
NAVAL FACILITIES ENGINEERING COMMAND
U.S. NAVAL STATION ROOSEVELT ROADS, P.R.
REPAIRS TO NAVAL HOSPITAL
PENTHOUSE FRAMING AND DETAILS

REVISION DESCRIPTION | DATE
ENG. DIV. DIR.: DATE:
SATISFACTORY TO: DATE:
DESIGN BY: EKG DRAWN BY: MSP

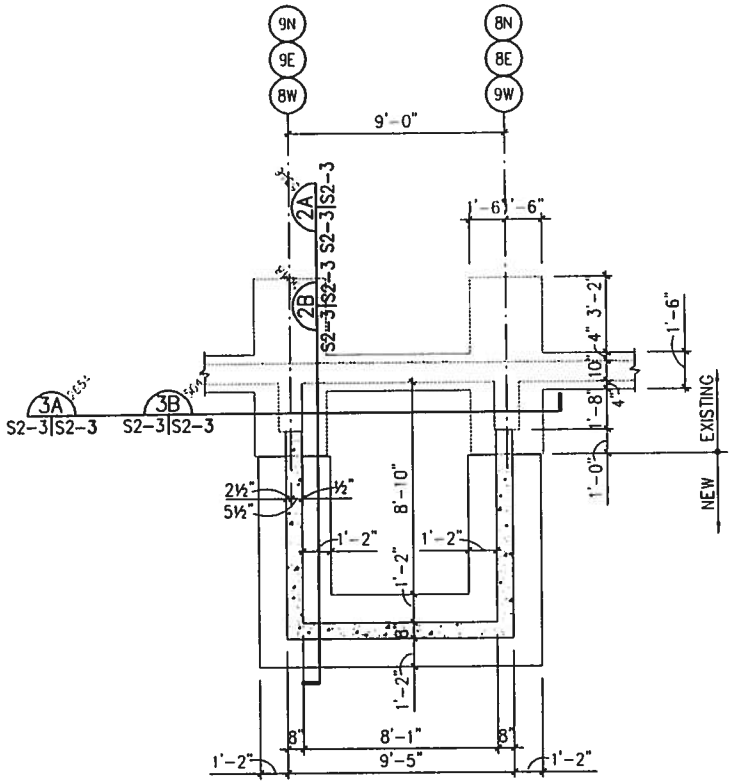

FOUNDATION PLAN
ELECTRICAL ROOM ADDITIONS

1 28x32 x|S2-3

SCALE: 1/4"=1'-0"

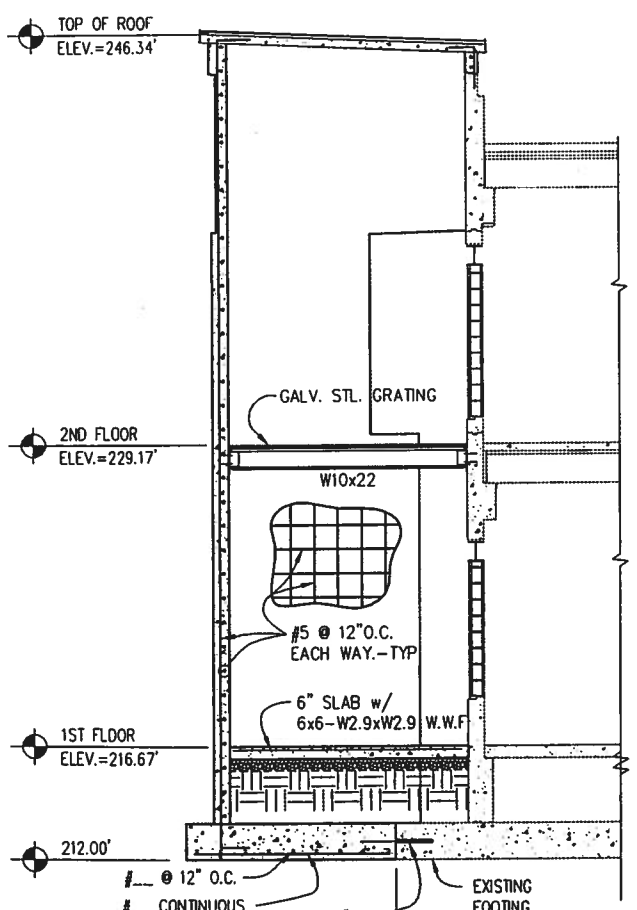

SECTION AT GRIDS (9N) & (8N) 2B 5048 S2-3|S2-3

SCALE: 1/4"=1'-0"

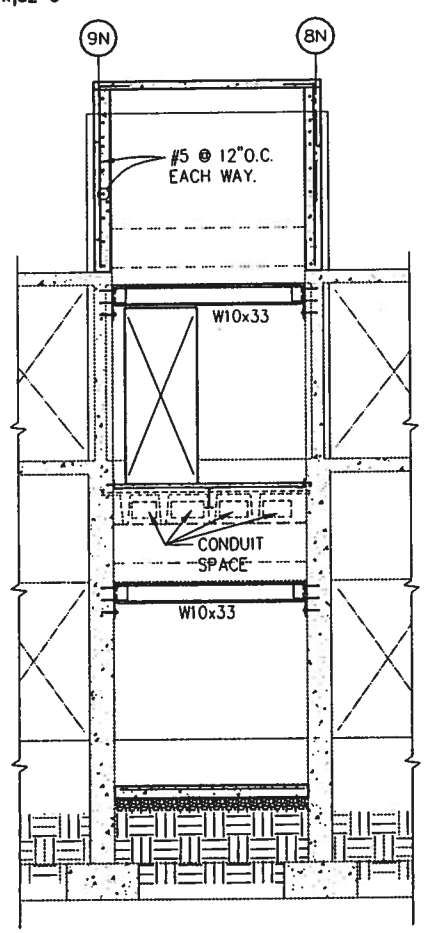

SECTION AT GRIDS (9N) & (8N) 3B 5047 S2-3|S2-3

SCALE: 1/4"=1'-0"

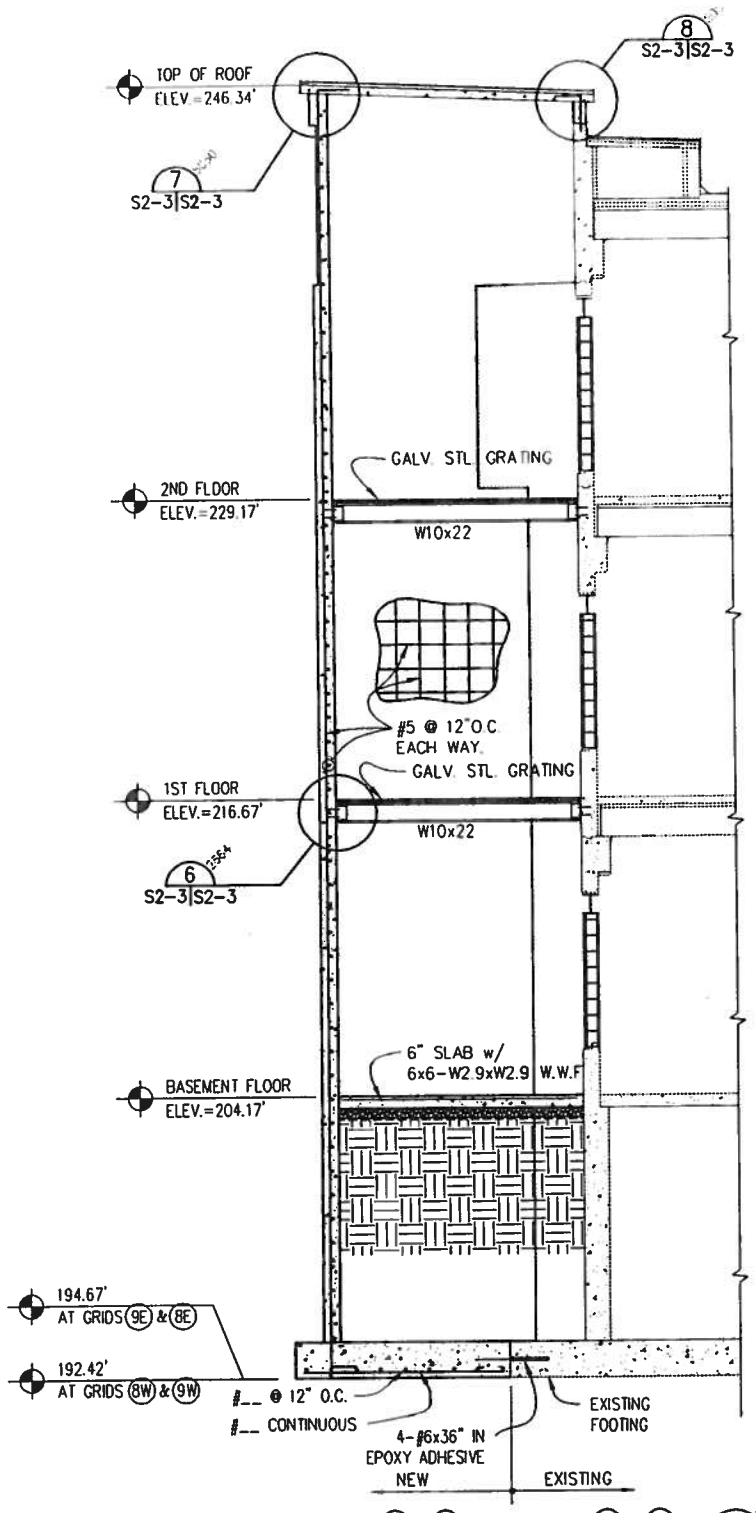

SECTION AT GRIDS (9E) & (8E) ALSO AT GRIDS (8W) & (9W) 2A 5046 S2-3|S2-3

SCALE: 1/4"=1'-0"

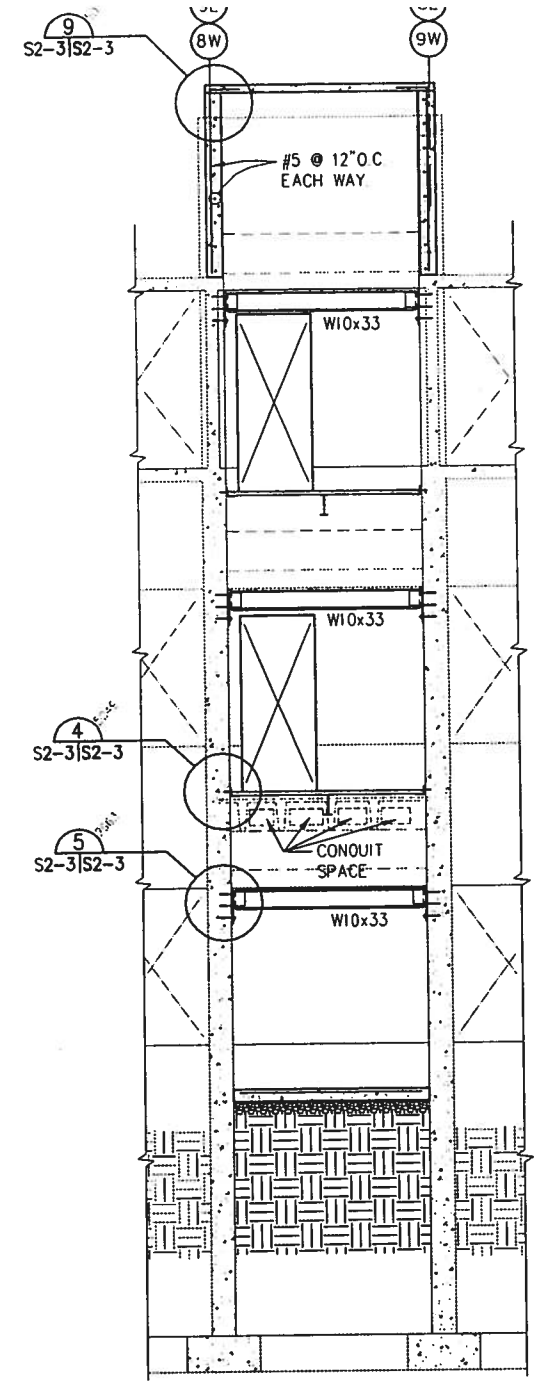

SECTION AT GRIDS (9E) & (8E) ALSO AT GRIDS (8W) & (9W) 3A 5045 S2-3|S2-3

SCALE: 1/4"=1'-0"

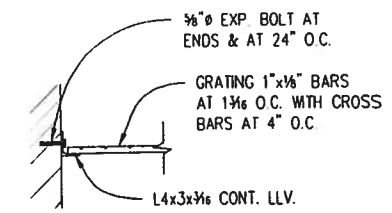

SECTION 4 5049 S2-3|S2-3

SCALE: 3/4"=1'-0"

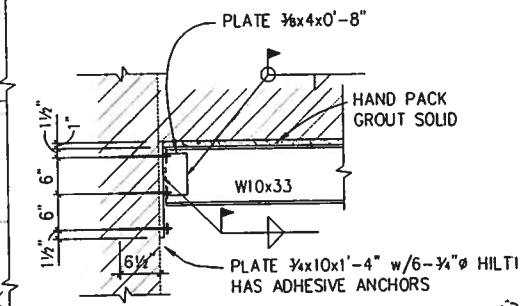

SECTION 5 5055 S2-3|S2-3

SCALE: 3/4"=1'-0"

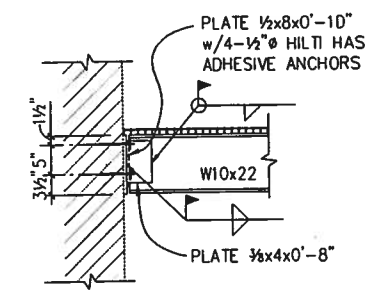

SECTION 6 5054 S2-3|S2-3

SCALE: 3/4"=1'-0"

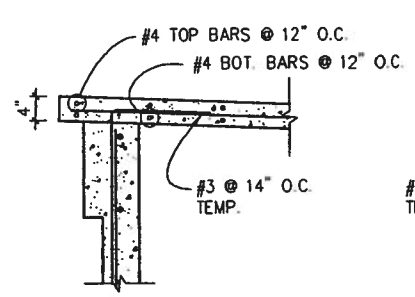

SECTION 7 5050 S2-3|S2-3

SCALE: 3/4"=1'-0"

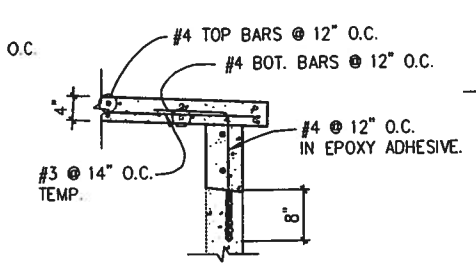

SECTION 8 5052 S2-3|S2-3

SCALE: 3/4"=1'-0"

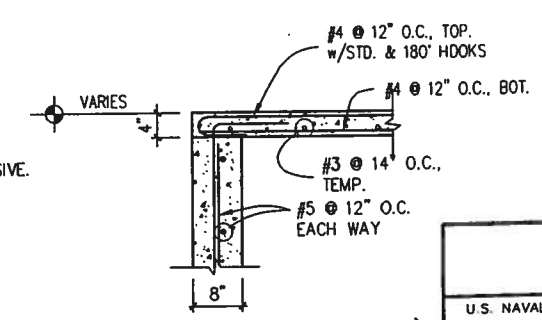

SECTION 9 5051 S2-3|S2-3

SCALE: 3/4"=1'-0"

P:\95-113\ST\11350203.dwg, (12|24), 05/03/96 at 16:45:22 by PITTMAN_S

SHERLOCK, SMITH & ADAMS, INC.
ARCHITECTS – ENGINEERS
MONTGOMERY, ALABAMA

U.S. NAVAL STATION ROOSEVELT ROADS, P.R.
REPAIRS TO NAVAL HOSPITAL
ELECTRICAL ROOM ADDITIONS

CONSTR. CONTR. NO.	SPECIFICATION NO.	NAVFAC DRWG. NO.	TF NO. XXXXX
XXXXX	XXXXX	XXXXX	SHEET OF ??

REVISION DESCRIPTION	DATE	ENG. DIV. OR:	DATE	SATISFACTORY TO:	DATE	DRAWN BY:

DEPARTMENT OF THE NAVY
NAVAL FACILITIES ENGINEERING COMMAND
NAVY PUBLIC WORKS CENTER, JACKSONVILLE, FL
U.S. NAVAL STATION ROOSEVELT ROADS, P.R.
REPAIRS TO NAVAL HOSPITAL
ELECTRICAL ROOM ADDITIONS

PLATE NO.
S2-3

PWC # 00000