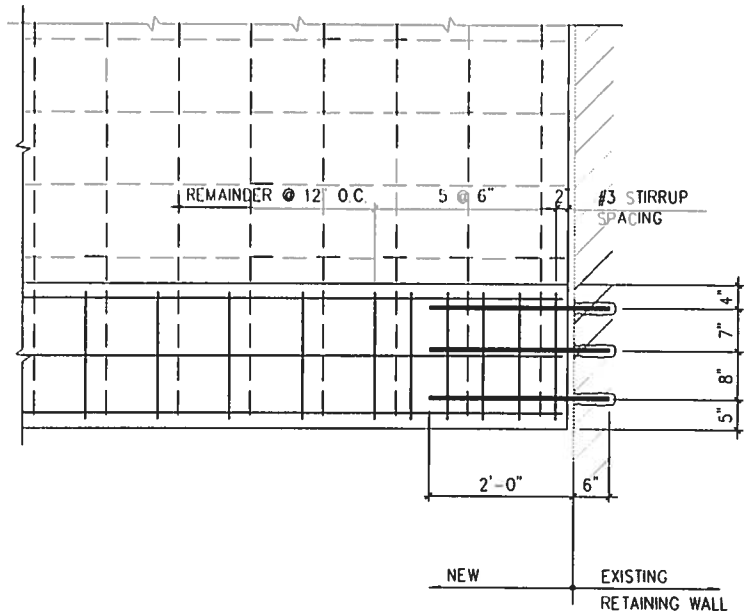

SECTION 1 2652 S2-1|S2-4
SCALE: 3/4"=1'-0"

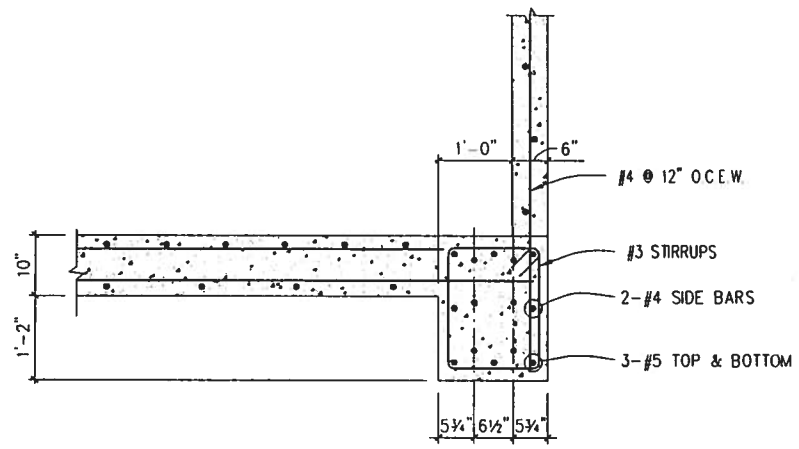

SECTION 2 2655 S2-1|S2-4
SCALE: 3/4"=1'-0"

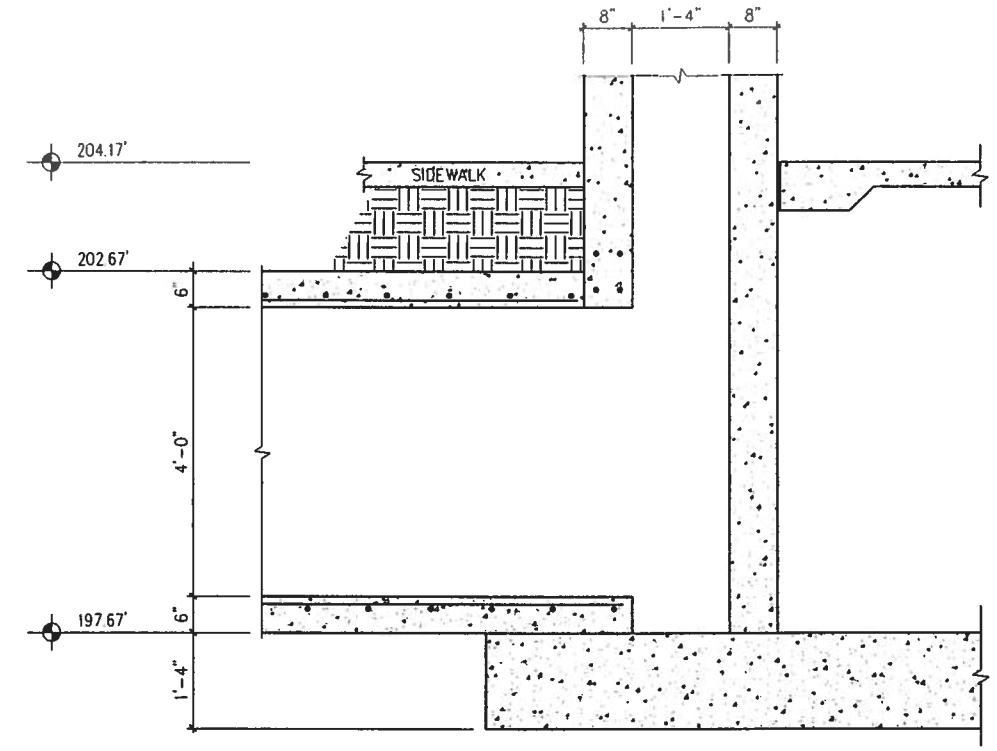

SECTION 3 2656 S2-1|S2-4
SCALE: 3/4"=1'-0"

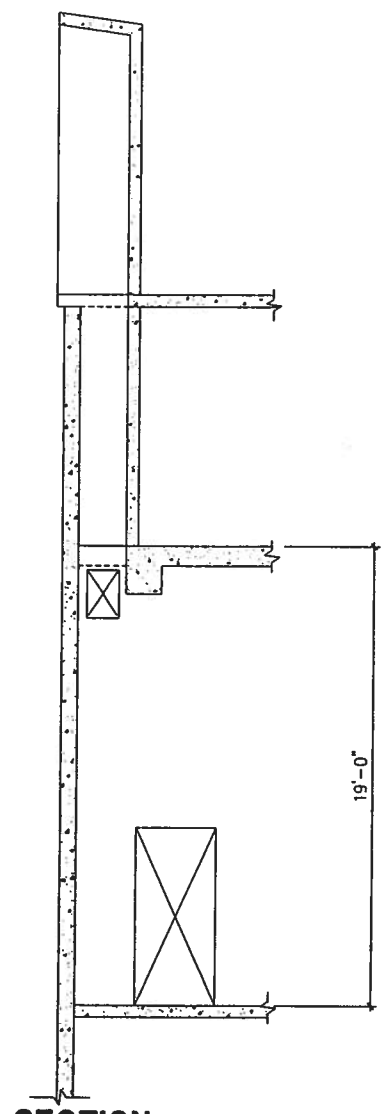

SECTION 4 2653 S2-1|S2-4
SCALE: 1/4"=1'-0"

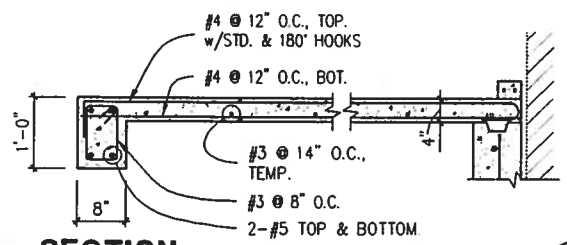

SECTION 5 2650 S2-1|S2-4
SCALE: 3/4"=1'-0"

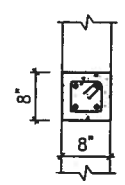

PLAN 6 2654 S2-1|S2-4
SCALE: 3/4"=1'-0"

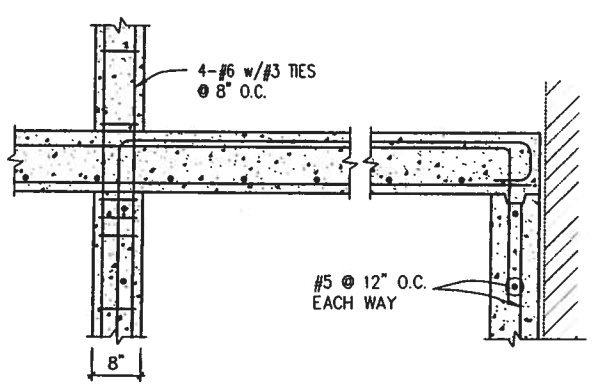

SECTION 7 2660 S2-1|S2-4
SCALE: 3/4"=1'-0"

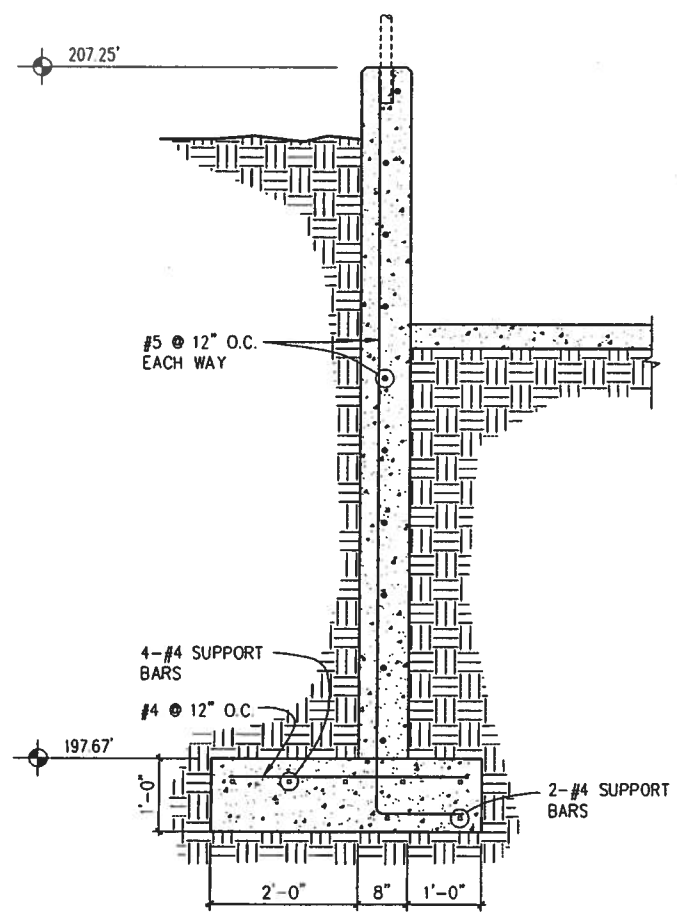

SECTION 8 2662 S2-1|S2-4
SCALE: 3/4"=1'-0"

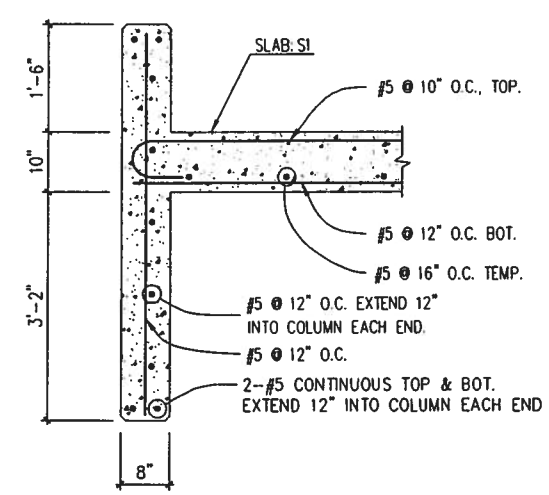

SECTION 9 2657 S2-1|S2-4
SCALE: 3/4"=1'-0"

SEAL AREA

DAC. DIV. DIR. DATE
SATISFACTORY TO DATE

DATE	REVISION DESCRIPTION

NAVAL FACILITIES ENGINEERING COMMAND
DEPARTMENT OF THE NAVY
NAVY PUBLIC WORKS CENTER, JACKSONVILLE, FL
U.S. NAVAL STATION ROOSEVELT ROADS, P.R.
REPAIRS TO NAVAL HOSPITAL
DETAILS

SHERLOCK, SMITH & ADAMS, INC.
ARCHITECTS – ENGINEERS
MONTGOMERY, ALABAMA

U.S. NAVAL STATION ROOSEVELT ROADS, P.R.
REPAIRS TO NAVAL HOSPITAL
DETAILS

CONSTR. CONTR. NO.	SPECIFICATION NO.	NAVFAC DRWG. NO.	TF NO. XXXXX
XXXXX	XXXXX	XXXXX	SHEET OF ??

PLATE NO. **S2-4**

P:\95-113\ST\113S0204.dwg, (8|16), 05/03/96 at 14:48:26 by PITTMAN_S

PWC # 00000

AD	ACCESS DOOR
AFF	ABOVE FINISHED FLOOR
AHU	AIR HANDLING UNIT
AWCV	AUTOMATIC WATER CONTROL VALVE
B	BOILER
CC	COOLING COIL
CD	CEILING DIFFUSER
CEG	CEILING EXHAUST GRILLE
CER	CEILING EXHAUST REGISTER
CH	CHILLER
CLP	CHILLED WATER LOOP PUMP
CP	CONDENSATE PUMP
CRG	CEILING RETURN GRILLE
CRP	CIRCULATING PUMP
CRR	CEILING RETURN REGISTER
CRS	COROSION RESISTANT STEEL
CTS	COOLING TOWER SUPPLY
CTR	COOLING TOWER RETURN
CV	CONSTANT VOLUME
CVTR	CONSTANT VOLUME TERMINAL REHEAT
CW	CHILLED WATER
CZP	CHILLED WATER ZONE PUMP
CWR	CHILLED WATER RETURN
CWS	CHILLED WATER SUPPLY
Db	DECIBELS
DB	DRY BULB TEMPERATURE
DCP	DIGITAL CONTROL PANEL
DPR	DIFFERENTIAL PRESSURE RELIEF
DT	DAY TANK (FUEL OIL)
E	EXHAUST
EF	EXHAUST FAN
EX	EXISTING
ET	EXPANSION TANK
FD	FIRE DAMPER
FLD	FLOOR DRAIN
FF	FINAL FILTER
MVD	MANUAL VOLUME DAMPER
OA	OUTSIDE AIR
FMB	FILTER MIXING BOX
FOR	FUEL OIL RETURN
FOS	FUEL OIL SUPPLY

GFS	GENERATOR FUEL SUPPLY
GFR	GENERATOR FUEL RETURN
HC	HEATING COIL
HW	DOMESTIC HOT WATER RECIRCULATED
HWP	HOT WATER PUMP
HWR	HOT WATER RETURN
HWS	HOT WATER SUPPLY
MA	MIXED AIR
PCP	PERFORATED CEILING PANEL (O.R.) DIFFUSERS
PF	PRE-FILTER
R	RETURN
RA	RETURN AIR
RF	RETURN FAN
RHC	REHEAT COIL
RHT	REHEAT
S	SUPPLY
SA	SUPPLY AIR
SD	SMOKE DAMPER
SF	SUPPLY FAN
SFD	COMBINATION FIRE/SMOKE DAMPER
SMD	SMOKE DETECTOR
TG	TRANSFER GRILLE
TS	TEMPERATURE SENSOR
VAV	VARIABLE AIR VOLUME
VF	VENTILATION FAN
VFD	VARIABLE FREQUENCY DRIVE
VSD	VARIABLE SPEED DRIVE
WB	WET BULB TEMPERATURE
WER	WALL EXHAUST REGISTER
WEG	WALL EXHAUST GRILLE
W.H.	WALL HYDRANT
W.G.	WATER GAUGE
WRR	WALL RETURN REGISTER
WRG	WALL RETURN GRILLE
WSR	WALL SUPPLY REGISTER

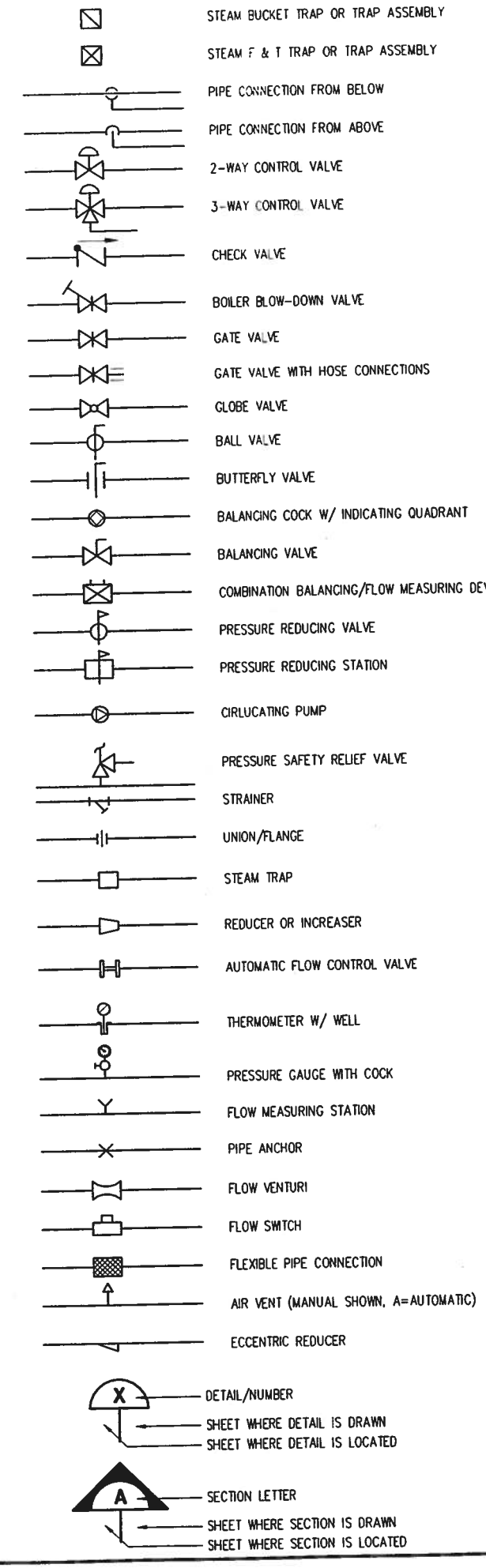

SHERLOCK, SMITH & ADAMS, INC.
ARCHITECTS – ENGINEERS
MONTGOMERY, ALABAMA

U.S. NAVAL STATION ROOSEVELT ROADS, P.R.
REPAIRS TO NAVAL HOSPITAL
LEGEND

CONSTR. CONTR. NO.	SPECIFICATION NO.	NAVFAC DRWG. NO.	TF NO. XXXXX
XXXXX	XXXXX	XXXXX	SHEET ? OF ??

DESIGN BY: DUFFEE DRAWN BY: JOHNER
ENG. DIV. DIR.: DATE: SATISFACTORY TO: DATE:
APPROVED: VALIUR

REVISION DESCRIPTION	DATE

DEPARTMENT OF THE NAVY
NAVAL FACILITIES ENGINEERING COMMAND
NAVY PUBLIC WORKS CENTER, JACKSONVILLE, FL
U.S. NAVAL STATION ROOSEVELT ROADS, P.R.
REPAIRS TO NAVAL HOSPITAL
LEGEND

PLATE NO.
M0-1

PWC # XXXXX

FLEXIBLE DUCT CONNECTION

PARALLEL BLADE DAMPER

OPPOSED BLADE DAMPER

M — MOTORIZED DAMPER

AIR FLOW MONITOR

T — THERMOSTAT

TS — TEMPERATURE SENSOR

FLAT OVAL DUCT

SINGLE LINE DUCTWORK

SINGLE LINE FLEXIBLE DUCTWORK

THIS SIDE TO REMAIN

REMOVE THIS SIDE

POINT OF CONNECTION NEW TO EXIST.

W x H — EXISTING DUCTWORK TO REMAIN

W x H — NEW DUCTWORK (WIDTH x HEIGHT)

90S — SUPPLY DIFFUSER, REGISTER OR GRILLE W/ CFM

90R 90E — RETURN OR EXHAUST REGISTER OR GRILLE W/ CFM

AD — DUCT MOUNTED ACCESS DOOR

FLEXIBLE DUCT

SUPPLY DUCT TURN UP

RETURN OR EXHAUST DUCT TURN UP

SUPPLY DUCT TURN DOWN

RETURN OR EXHAUST DUCT TURN DOWN

R or D — DUCT RISE OR DROP IN DIRECTION OF AIR FLOW

90 DEG ELBOW W/ TURNING VANES

MVD — BRANCH DUCT CONNECTION W/ MANUAL VOLUME DAMPER

MVD — SPIN IN FITTING W/ MANUAL VOLUME DAMPER

6" S — SPLITTER DAMPER W/ SPLIT SIZE

FD — FIRE DAMPER

SD — SMOKE DAMPER

SFD — COMBINATION SMOKE/FIRE DAMPER

W	DOMESTIC COLD WATER
HW	DOMESTIC HOT WATER
HR	DOMESTIC HOT WATER RECIRCULATING
HPS	HIGH PRESSURE STEAM (> 60 psi)
MPS	MEDIUM PRESSURE STEAM (16 to 59 psi)
S	LOW PRESSURE STEAM (0 to 15 psi)
HPR	HIGH PRESSURE STEAM CONDENSATE
MPR	MEDIUM PRESSURE STEAM CONDENSATE
	LOW PRESSURE STEAM CONDENSATE
PC	PUMPED CONDENSATE
FOS	FUEL OIL SUPPLY
FOR	FUEL OIL RETURN
FOG	FUEL OIL GAUGE
FOV	FUEL OIL VENT
GFS	GENERATOR FUEL SUPPLY
GFR	GENERATOR FUEL RETURN
RV	RELIEF VENT
V	VENT
HWS	HOT WATER SUPPLY
HWR	HOT WATER RETURN
CWS	CHILLED WATER SUPPLY
CWR	CHILLED WATER RETURN
CTS	COOLING TOWER SUPPLY
CTR	COOLING TOWER RETURN
D	DRAIN
	EXISTING DUCTWORK & PIPING TO REMAIN
	EXISTING DUCTWORK, PIPING, AND EQUIPMENT TO BE REMOVED
	DIRECTION OF SLOPE

GENERAL NOTES:

1. FINAL LOCATIONS OF CEILING MOUNTED SUPPLY AIR DIFFUSERS, RETURN AIR REGISTERS OR GRILLES AND EXHAUST AIR REGISTERS OR GRILLES SHALL BE AS INDICATED ON THE REFLECTED CEILING PLANS AND FULLY COORDINATED WITH THE CEILING GRID SYSTEM AND OTHER EQUIPMENT AND DEVICES LOCATED IN THE CEILING.

2. ALL REQUIRED EQUIPMENT PIPING CONNECTION APPURTENANCES, AUXILIARIES AND DEVICES ARE NOT NECESSARILY SHOWN ON THE PIPING PLANS, SECTIONS, ELEVATIONS AND DIAGRAMS, HOWEVER, ALL SHALL PROVIDE WHERE INDICATED AND AS SHOWN ON EQUIPMENT CONNECTION DETAILS AND/OR SPECIFIED.

3. PROVIDE AIR VENTS AT ALL HIGH POINTS IN CHILLED AND HOT WATER SYSTEMS.

4. DO NOT SCALE THESE DRAWINGS. SEE ARCHITECTURAL DRAWINGS FOR DIMENSIONS.

5. CONTRACTOR SHALL BE RESPONSIBLE FOR COORDINATION OF NEW HVAC DUCTWORK AND PIPING WITH EXISTING STRUCTURE, EXISTING DUCTWORK AND PIPING AND ELECTRICAL DRAWINGS.

6. CONTRACTOR SHALL PROVIDE COLOR CODED LABELING DEVICES ON CEILING TILES BELOW EQUIPMENT AND OTHER APPORTENANCES THAT REQUIRE ACCESIBILITY. THIS INCLUDES DUCT, ACCESS DOORS, FILTERS, DAMPERS, COMBINATION SMOKE/FIRE DAMPERS, CONSTANT VOLUME BOVES AND VALVES.

SHERLOCK, SMITH & ADAMS, INC.
ARCHITECTS – ENGINEERS
MONTGOMERY, ALABAMA

U.S. NAVAL STATION ROOSEVELT ROADS, P.R.
REPAIRS TO NAVAL HOSPITAL
LEGEND

CONSTR. CONTR. NO.	SPECIFICATION NO.	NAVFAC DRWG. NO.	TF NO. XXXXX
XXXXX	XXXXX	XXXXX	SHEET ? OF ??

DRAWN BY: XXXXXX
DESIGN BY: XXXXXX
ENG. DIV. DIR.: DATE
SATISFACTORY TO: DATE

REVISION DESCRIPTION	DATE

NAVAL FACILITIES ENGINEERING COMMAND
DEPARTMENT OF THE NAVY
NAVY PUBLIC WORKS CENTER, JACKSONVILLE, FL
U.S. NAVAL STATION ROOSEVELT ROADS, P.R.
REPAIRS TO NAVAL HOSPITAL
LEGEND

PLATE NO.
M0-2

PWC # XXXXX

1. DEMOLITION IN THE SUB BASEMENT MECHANICAL ... OF STEAM SYSTEM OF THE FOLLOWING EQUIPMENT AS SCHEDULED IN THE PHASING PLAN

BOILER ROOM

A. STEAM BOILERS (2), BURNERS, FLUE, PIPING AND ACCESSORIES
B. DEAERATORS, BOILER FEED PUMPS AND ASSOCIATED PIPING
C. CONDENSATE RECEIVER, BLOW-DOWN TANK, FLASH TANK, VENTS AND WATER MAKEUP ASSEMBLY.
D. AIR SEPARATORS AND EXPANSION TANKS.
E. CHEMICAL BOILER WATER TREATMENT SYSTEMS (2)
F. FUEL OIL TRANSFER PUMPS, OIL FILTERS, AND ASSOCIATED INTERIOR PIPING.
G. STEAM MANIFOLD, PRESSURE REDUCING ASSEMBLIES, RELIEF/VENTS AND PIPING TO POINT OF CONNECTION TO PIPING-TO-REMAIN.
H. HOUSEKEEPING PADS FOR ALL DEMOLISHED EQUIPMENT.

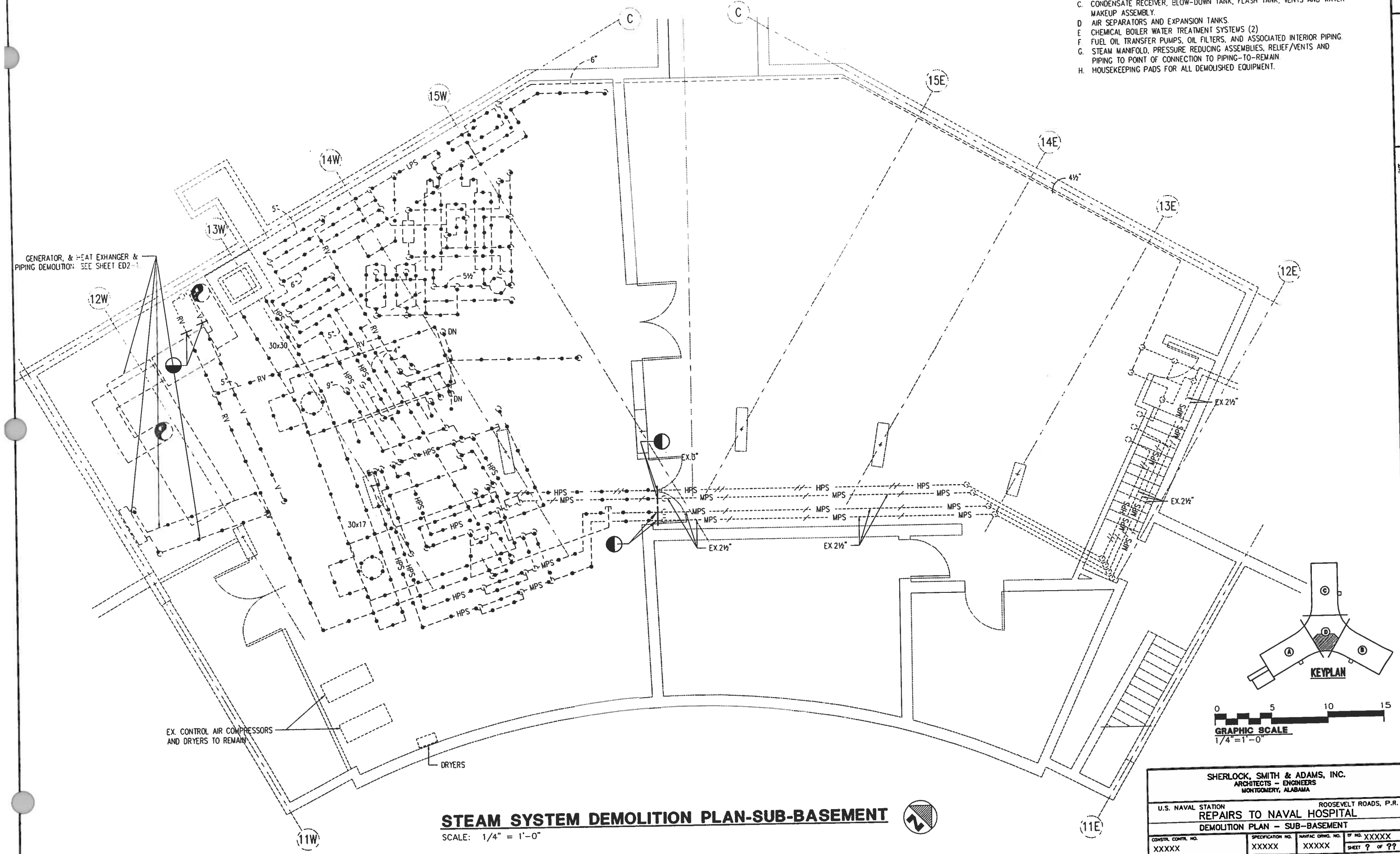

STEAM SYSTEM DEMOLITION PLAN-SUB-BASEMENT

SCALE: 1/4" = 1'-0"

SHERLOCK, SMITH & ADAMS, INC.
ARCHITECTS - ENGINEERS
MONTGOMERY, ALABAMA

U.S. NAVAL STATION — ROOSEVELT ROADS, P.R.
REPAIRS TO NAVAL HOSPITAL
DEMOLITION PLAN - SUB-BASEMENT

CONSTR. CONTR. NO.	SPECIFICATION NO.	NAVFAC DRWG. NO.	TF NO. XXXXX
XXXXX	XXXXX	XXXXX	SHEET ? OF ??

DEPARTMENT OF THE NAVY
NAVY PUBLIC WORKS CENTER, JACKSONVILLE, FL
NAVAL FACILITIES ENGINEERING COMMAND

U.S. NAVAL STATION — ROOSEVELT ROADS, P.R.
REPAIRS TO NAVAL HOSPITAL
DEMOLITION PLAN - SUB-BASEMENT

PLATE NO. M1-1

PWC # XXXXX

REVISION DESCRIPTION — DATE

ENG. DIV. DIR.: — DATE: — SATISFACTORY TO: — DATE:

DESIGN BY: McDONALD DRAWN BY: JOINER

1. DEMOLITION OF HOT/CHILLED/COOLING TOWER MECHANICAL ROOMS CONSISTS IN GENERAL OF REMOVAL OF THE FOLLOWING EQUIPMENT AS SCHEDULED IN THE PHASING PLAN:

BOILER ROOM

A. HOT WATER HEATING HEAT EXCHANGERS, TANKS, PUMPS, & PIPING
B. COOLING TOWER WATER PIPING AND ASSOCIATED PUMPS
C. HOUSEKEEPING PADS FOR ALL DEMOLISHED EQUIPMENT

CHILLER ROOM

A. CENTRIFUGAL CHILLERS (2) ASSOCIATED PUMPS & PIPING AND ACCESSORIES
B. COOLING TOWER PUMPS (2) AND ASSOCIATED PIPING
C. DOMESTIC HOT WATER GENERATORS, CIRCULATORS RELIEF/VENTS AND ASSOCIATED PIPING
D. ALL COOLING TOWER PIPING AND AUXILLARY PUMPS TO POINT OF CONNECTION TO EXISTING PIPING-TO-REMAIN IN THE UTILITY TUNNEL
E. COOLING TOWER AND CHILLED WATER CHEMICAL TREATMENT SYSTEMS
F. HOUSEKEEPING PADS FOR ALL DEMOLISHED EQUIPMENT

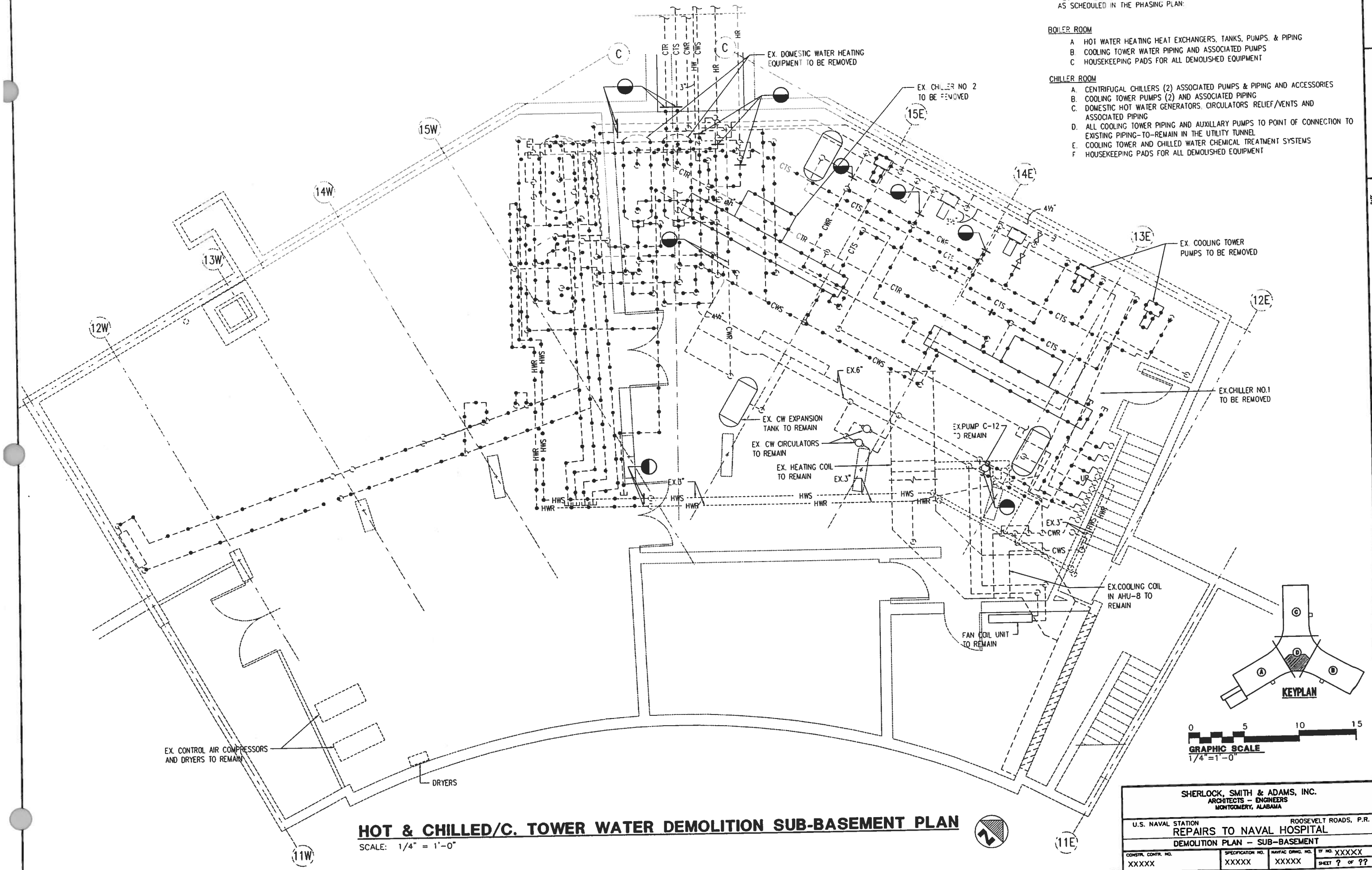

HOT & CHILLED/C. TOWER WATER DEMOLITION SUB-BASEMENT PLAN

SCALE: 1/4" = 1'-0"

SHERLOCK, SMITH & ADAMS, INC.
ARCHITECTS – ENGINEERS
MONTGOMERY, ALABAMA

U.S. NAVAL STATION ROOSEVELT ROADS, P.R.
REPAIRS TO NAVAL HOSPITAL
DEMOLITION PLAN – SUB-BASEMENT

CONSTR. CONTR. NO.	SPECIFICATION NO.	NAVFAC DRWG. NO.	TF NO. XXXXX
XXXXX	XXXXX	XXXXX	SHEET ? OF ??

DESIGN BY: McDONALD DRAWN BY: JOINER

DEPARTMENT OF THE NAVY
NAVAL FACILITIES ENGINEERING COMMAND
NAVY PUBLIC WORKS CENTER, JACKSONVILLE, FL
U.S. NAVAL STATION ROOSEVELT ROADS, P.R.
REPAIRS TO NAVAL HOSPITAL
DEMOLITION SUB-BASEMENT PLAN

PLATE NO. M1-2

PWC # XXXXX

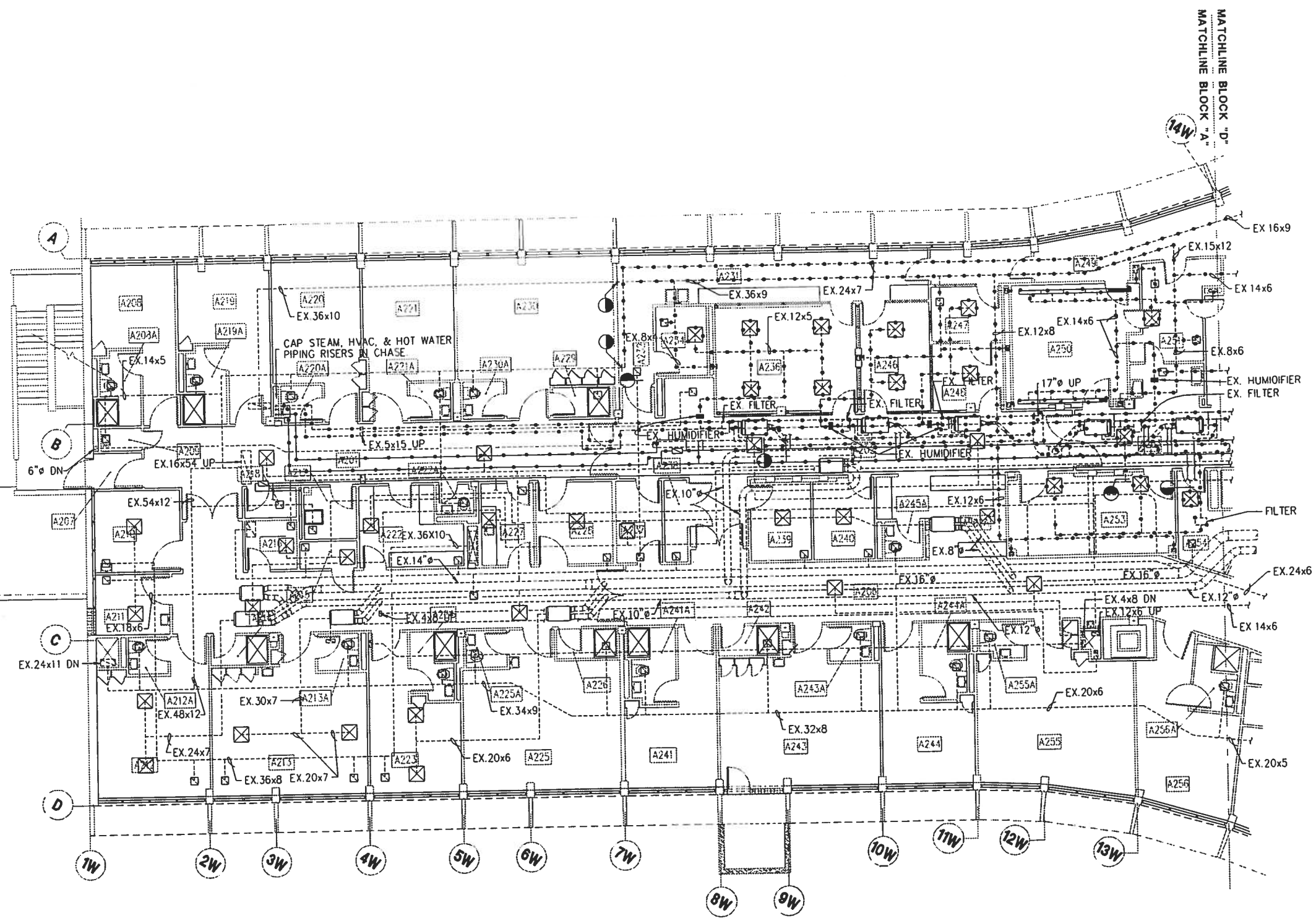

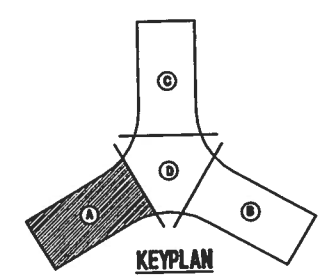

0 5 10 15 20
GRAPHIC SCALE
1/8"=1'-0"

NOTES:
1. REMOVE ALL HVAC HOT WATER PIPING ABOVE CEILING ON SECOND FLOOR WHERE CEILING'S ARE TO BE ROMOVED. COORDINATE WITH DRAWING A9-3.

2. REMOVE ALL STEAM PIPING ABOVE CEILINGS ON SECOND FLOOR WHERE CEILINGS ARE TO BE REMOVED. COORDINATE WITH DRAWING A9-3.

DEMOLITION PLAN - 2nd FLOOR BLOCK "A"

SCALE: 1/8" = 1'-0"

SHERLOCK, SMITH & ADAMS, INC.
ARCHITECTS – ENGINEERS
MONTGOMERY, ALABAMA

U.S. NAVAL STATION ROOSEVELT ROADS, P.R.
REPAIRS TO NAVAL HOSPITAL
DEMOLITION PLAN – 2nd FLOOR BLOCK "A"

CONSTR. CONTR. NO.	SPECIFICATION NO.	NAVFAC DRWG. NO.	TF NO. XXXXX
XXXXX	XXXXX	XXXXX	SHEET ? OF ??

DESIGN BY: DUFFEE DRAWN BY: JOINER

ENG. DIV. DIR.: DATE:
SATISFACTORY TO: DATE:

REVISION DESCRIPTION	DATE

NAVAL FACILITIES ENGINEERING COMMAND
DEPARTMENT OF THE NAVY
NAVY PUBLIC WORKS CENTER, JACKSONVILLE, FL
U.S. NAVAL STATION ROOSEVELT ROADS, P.R.
REPAIRS TO NAVAL HOSPITAL
DEMOLITION PLAN – 2nd FLOOR BLOCK "A"

PLATE NO.
M1-3

PWC # XXXXX

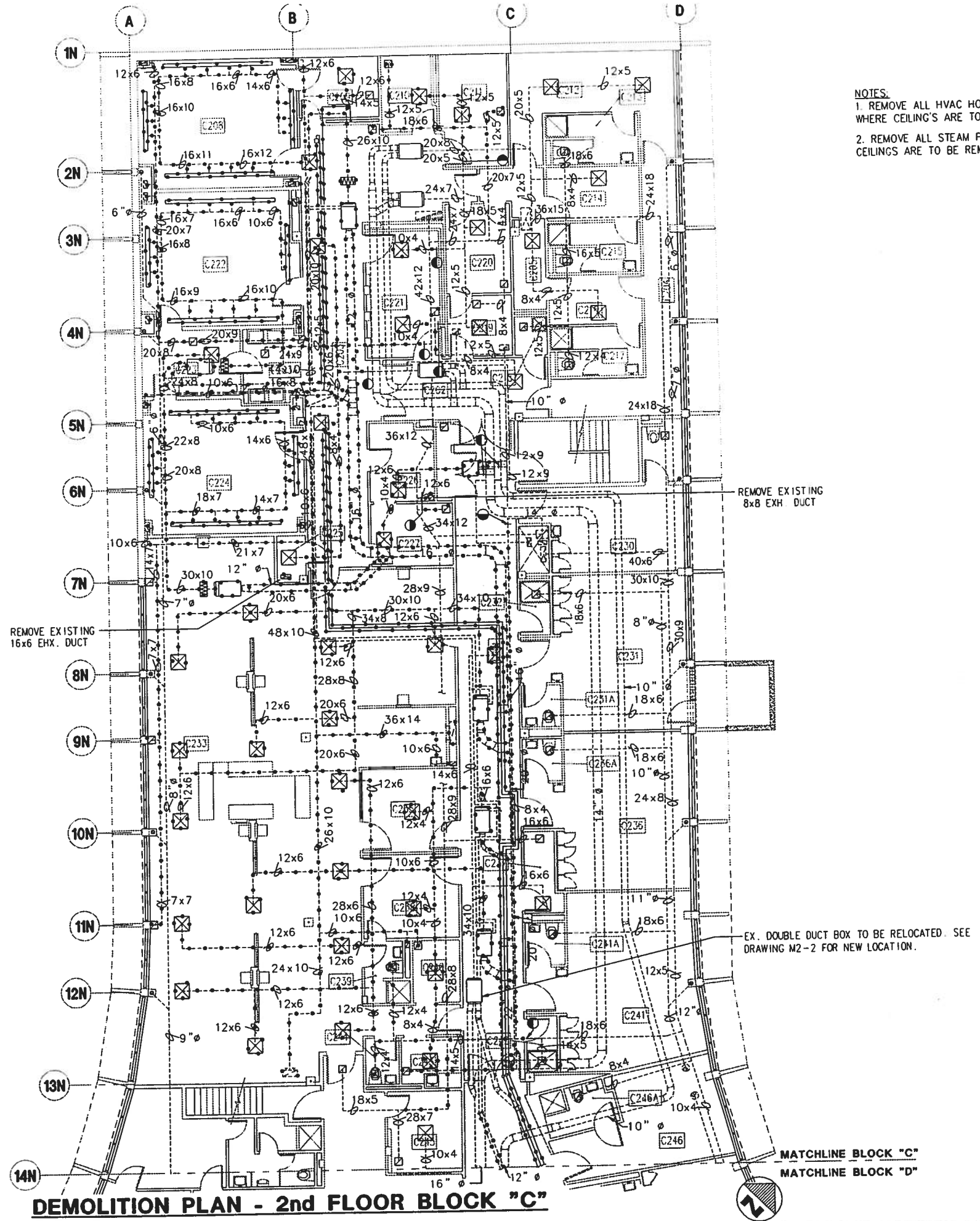

DEMOLITION PLAN - 2nd FLOOR BLOCK "C"

SCALE: 1/8" = 1'-0"

NOTES.

1. REMOVE ALL HVAC HOT WATER PIPING ABOVE CEILING ON SECOND FLOOR WHERE CEILING'S ARE TO BE ROMOVED. COORDINATE WITH DRAWING A9-3.

2. REMOVE ALL STEAM PIPING ABOVE CEILINGS ON SECOND FLOOR WHERE CEILINGS ARE TO BE REMOVED COORDINATE WITH DRAWING A9-3.

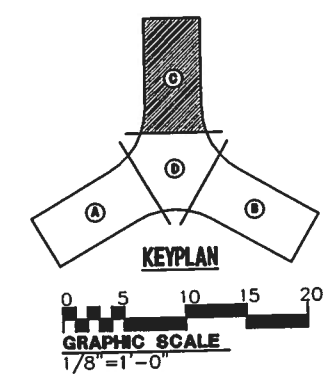

SHERLOCK, SMITH & ADAMS, INC.
ARCHITECTS - ENGINEERS
MONTGOMERY, ALABAMA

U.S. NAVAL STATION ROOSEVELT ROADS, P.R.
REPAIRS TO NAVAL HOSPITAL
DEMOLITION PLAN - 2nd FLOOR BLOCK "C"

CONSTR. CONTR. NO.	SPECIFICATION NO.	NAVFAC DRWG. NO.	TF NO. XXXXX
XXXXX	XXXXX	XXXXX	SHEET ? OF ??

DEPARTMENT OF THE NAVY
NAVY PUBLIC WORKS CENTER, JACKSONVILLE, FL
NAVAL FACILITIES ENGINEERING COMMAND

U.S. NAVAL STATION ROOSEVELT ROADS, P.R.
REPAIRS TO NAVAL HOSPITAL
DEMOLITION PLAN - 2nd FLOOR BLOCK "C"

PLATE NO.
M1-4

PWC # XXXXX

REVISION DESCRIPTION	DATE

ENG. DIV. DR.: DATE:
SATISFACTORY TO: DATE:
DESIGN BY: DUFFEE DRAWN BY: KONER

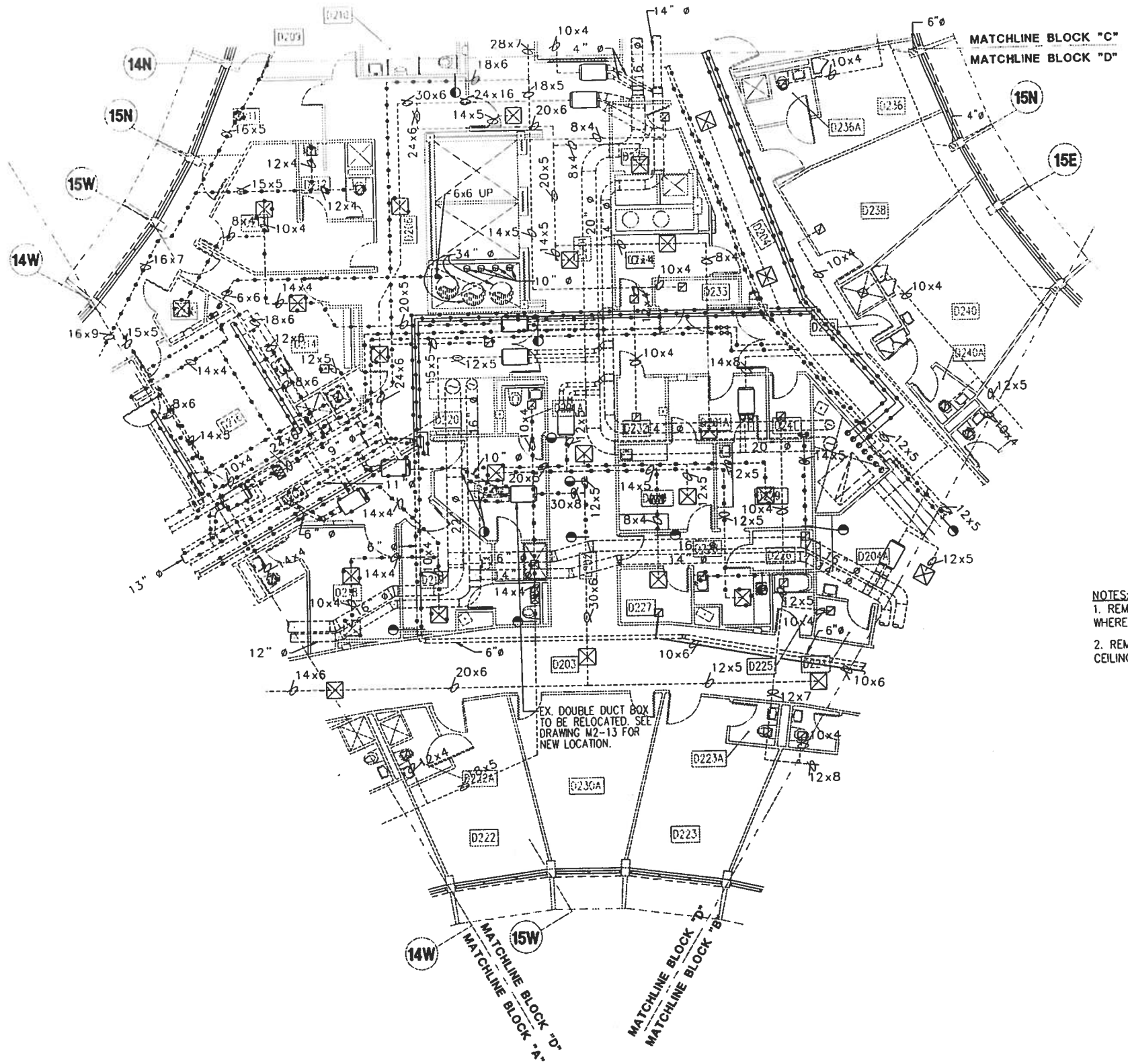

NOTES:
1. REMOVE ALL HVAC HOT WATER PIPING ABOVE CEILING ON SECOND FLOOR WHERE CEILING'S ARE TO BE ROMOVED. COORDINATE WITH DRAWING A9-3.

2. REMOVE ALL STEAM PIPING ABOVE CEILINGS ON SECOND FLOOR WHERE CEILINGS ARE TO BE REMOVED. COORDINATE WITH DRAWING A9-3.

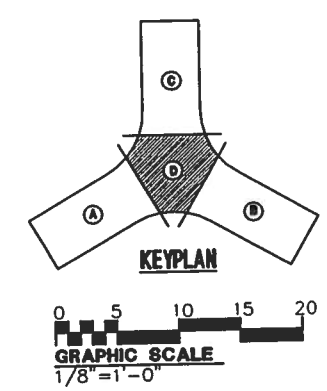

DEMOLITION PLAN - 2nd FLOOR BLOCK "D"

SCALE: 1/8" = 1'-0"

SHERLOCK, SMITH & ADAMS, INC.
ARCHITECTS – ENGINEERS
MONTGOMERY, ALABAMA

U.S. NAVAL STATION ROOSEVELT ROADS, P.R.
REPAIRS TO NAVAL HOSPITAL
DEMOLITION PLAN – 2nd FLOOR BLOCK "D"

CONSTR. CONTR. NO.	SPECIFICATION NO.	NAVFAC DRWG. NO.	TF NO. XXXXX
XXXXX	XXXXX	XXXXX	SHEET ? OF ??

ENG. DIV. DR.: DATE: SATISFACTORY TO: DATE: DESIGN BY: DUFFEE DRAWN BY: JOINER

REVISION DESCRIPTION	DATE

NAVAL FACILITIES ENGINEERING COMMAND
DEPARTMENT OF THE NAVY
NAVY PUBLIC WORKS CENTER, JACKSONVILLE, FL
U.S. NAVAL STATION ROOSEVELT ROADS, P.R.
REPAIRS TO NAVAL HOSPITAL
DEMOLITION PLAN – 2nd FLOOR BLOCK "D"

PLATE NO.
M1-5

PWC # vvvvv

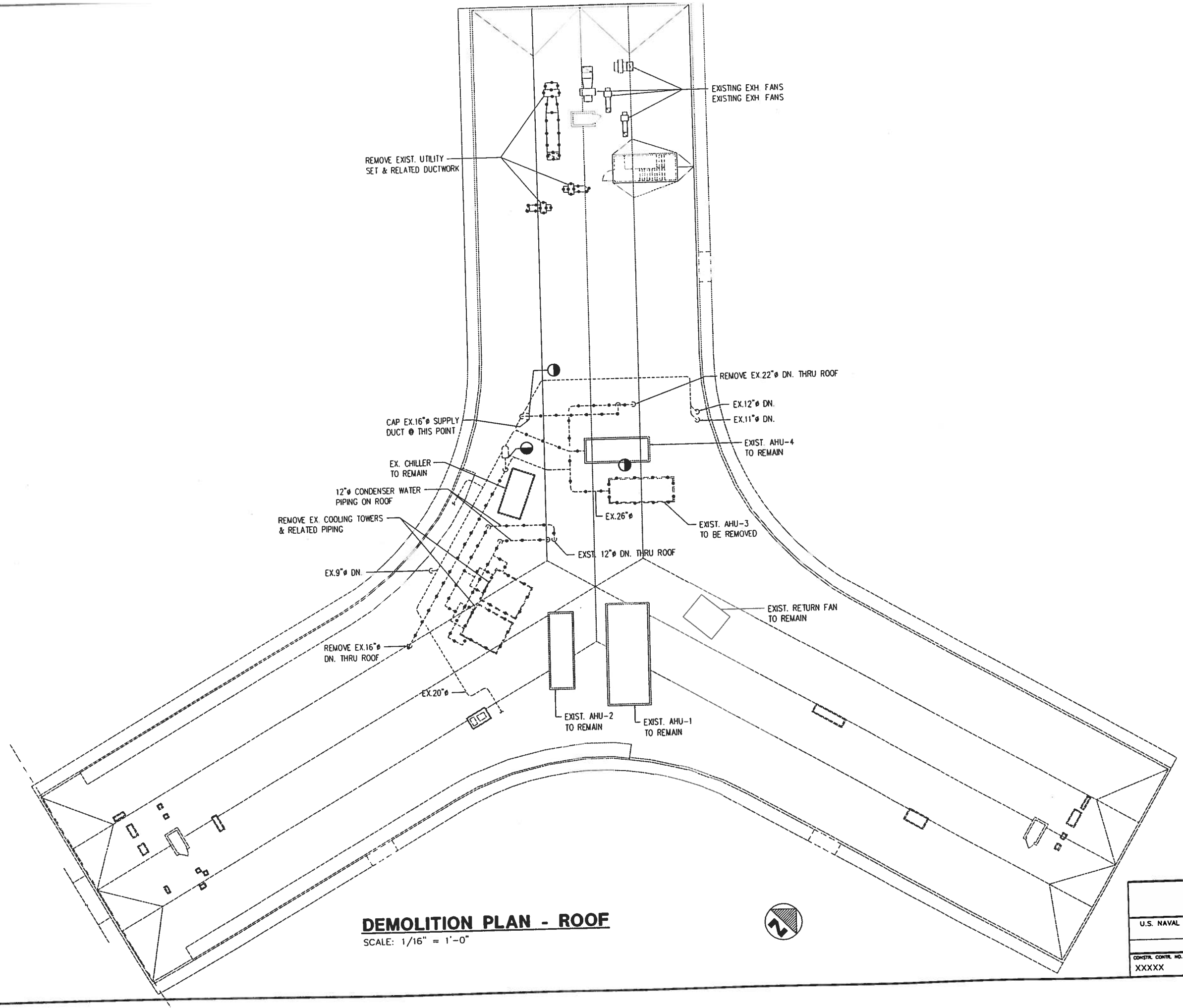

DEMOLITION PLAN - ROOF

SCALE: 1/16" = 1'-0"

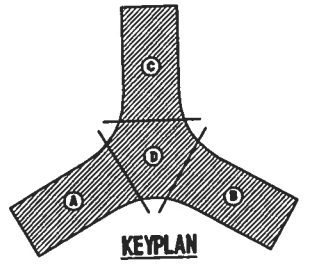

KEYPLAN

0 10 20 30 40

GRAPHIC SCALE
1/16"=1'-0"

SHERLOCK, SMITH & ADAMS, INC.
ARCHITECTS - ENGINEERS
MONTGOMERY, ALABAMA

U.S. NAVAL STATION ROOSEVELT ROADS, P.R.
REPAIRS TO NAVAL HOSPITAL
DEMOLITION PLAN - ROOF

CONSTR. CONTR. NO.	SPECIFICATION NO.	NAVFAC DRWG. NO.	TF NO. XXXXX
XXXXX	XXXXX	XXXXX	SHEET ? OF ??

DESIGN BY: DUFFEE DRAWN BY: JOINER

ENG. DIV. DIR.: DATE: SATISFACTORY TO: DATE:

REVISION DESCRIPTION DATE

NAVAL FACILITIES ENGINEERING COMMAND
DEPARTMENT OF THE NAVY
NAVY PUBLIC WORKS CENTER, JACKSONVILLE, FL

U.S. NAVAL STATION ROOSEVELT ROADS, P.R.
REPAIRS TO NAVAL HOSPITAL
DEMOLITION PLAN - ROOF

PLATE NO.
M1-6

PWC # XXXXX

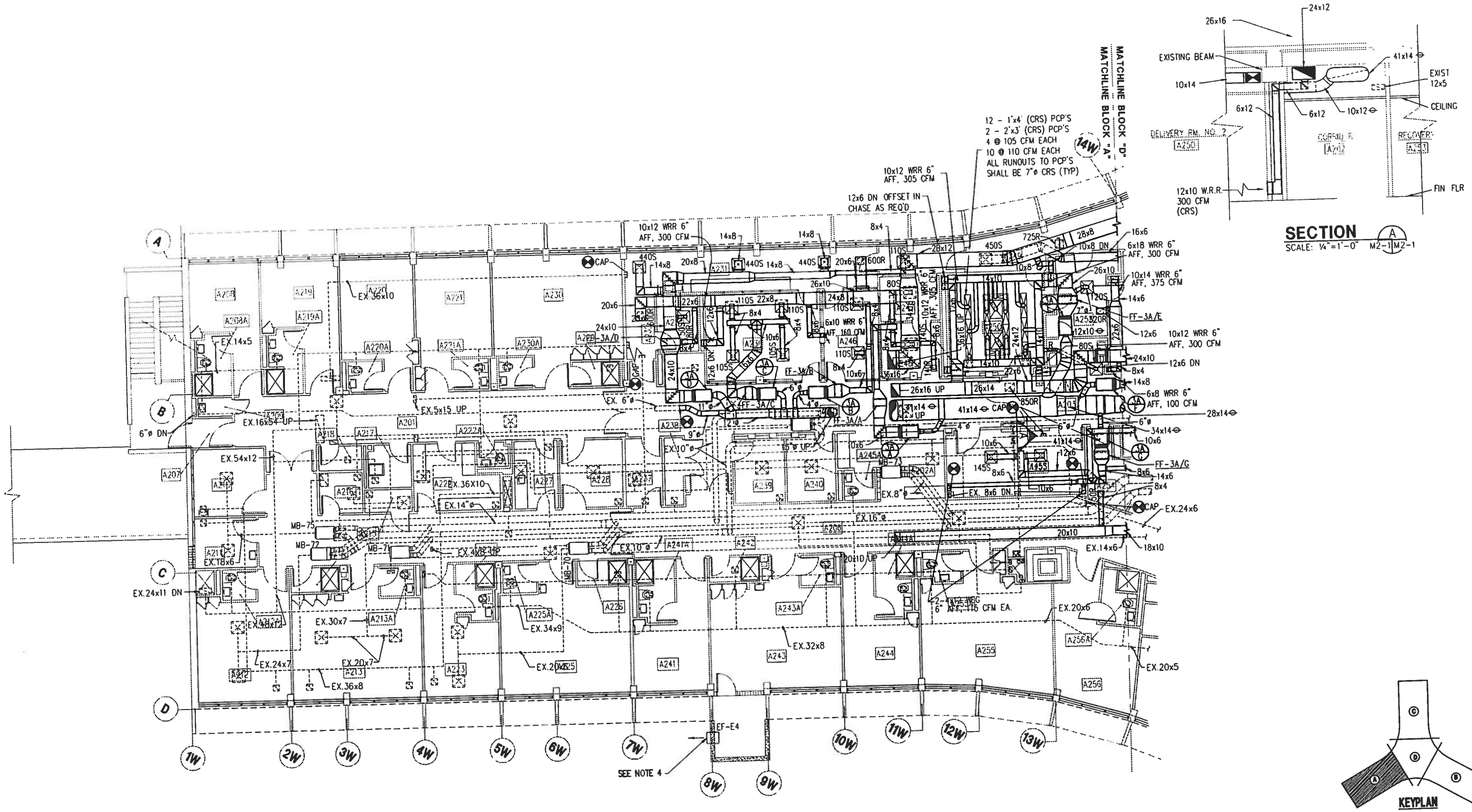

SECTION A

SCALE: 1/4"=1'-0" M2-1

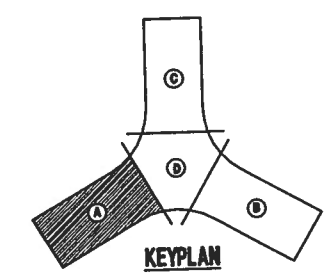

KEYPLAN

0 5 10 15 20

GRAPHIC SCALE

1/8"=1'-0"

NOTES:

1. ALL DUCTWORK & ACCESSORIES DOWNSTREAM OF FINAL FILTERS (FF-) SHALL BE CRS TYPE.
2. ALL FINAL FILTERS (FF-) MOUNTED ABOVE THE CEILINGS SHALL HAVE BOTTOM ACCESS DOORS. COORDINATE WITH OTHER DISCIPLINES TO AVOID CONFLICT. FILTER ACCESS MUST BE MAINTAINED. SEE DETAIL 4/M7-8.
3. ALL WALL RETURN REGISTERS OR GRILLES IN O.R.'S, DELIVERY ROOMS AND DENTAL O.R.'S SHALL BE CONSTRUCTED OF CORROSIVE RESISTANT STEEL (CRS). PROVIDE WALL RETURN REGISTERS WITH SPACE FOR 1" NON POWERED ELECTROSTATIC FILTER IN O.R.'S DELIVERY ROOMS & DENTAL O.R.'S.
4. SEE DETAIL 4/M7-6.

DUCTWORK PLAN-2nd FLOOR BLOCK "A"

SCALE: 1/8" = 1'-0"

ENG. DIV. DR.: DATE: SATISFACTORY TO: DATE:

DESIGN BY: DUFFEE DRAWN BY: JOINER

REVISION DESCRIPTION | DATE

NAVAL FACILITIES ENGINEERING COMMAND

DEPARTMENT OF THE NAVY

NAVY PUBLIC WORKS CENTER, JACKSONVILLE, FL

U.S. NAVAL STATION ROOSEVELT ROADS, P.R.

REPAIRS TO NAVAL HOSPITAL

DUCTWORK PLAN – 2nd FLOOR BLOCK "A"

SHERLOCK, SMITH & ADAMS, INC.
ARCHITECTS – ENGINEERS
MONTGOMERY, ALABAMA

U.S. NAVAL STATION ROOSEVELT ROADS, P.R.
REPAIRS TO NAVAL HOSPITAL
DUCTWORK PLAN – 2nd FLOOR BLOCK "A"

CONSTR. CONTR. NO.	SPECIFICATION NO.	NAVFAC DRWG. NO.	TF NO. XXXXX
XXXXX	XXXXX	XXXXX	SHEET ? OF ??

PLATE NO. M2-1

PWC # XXXXX

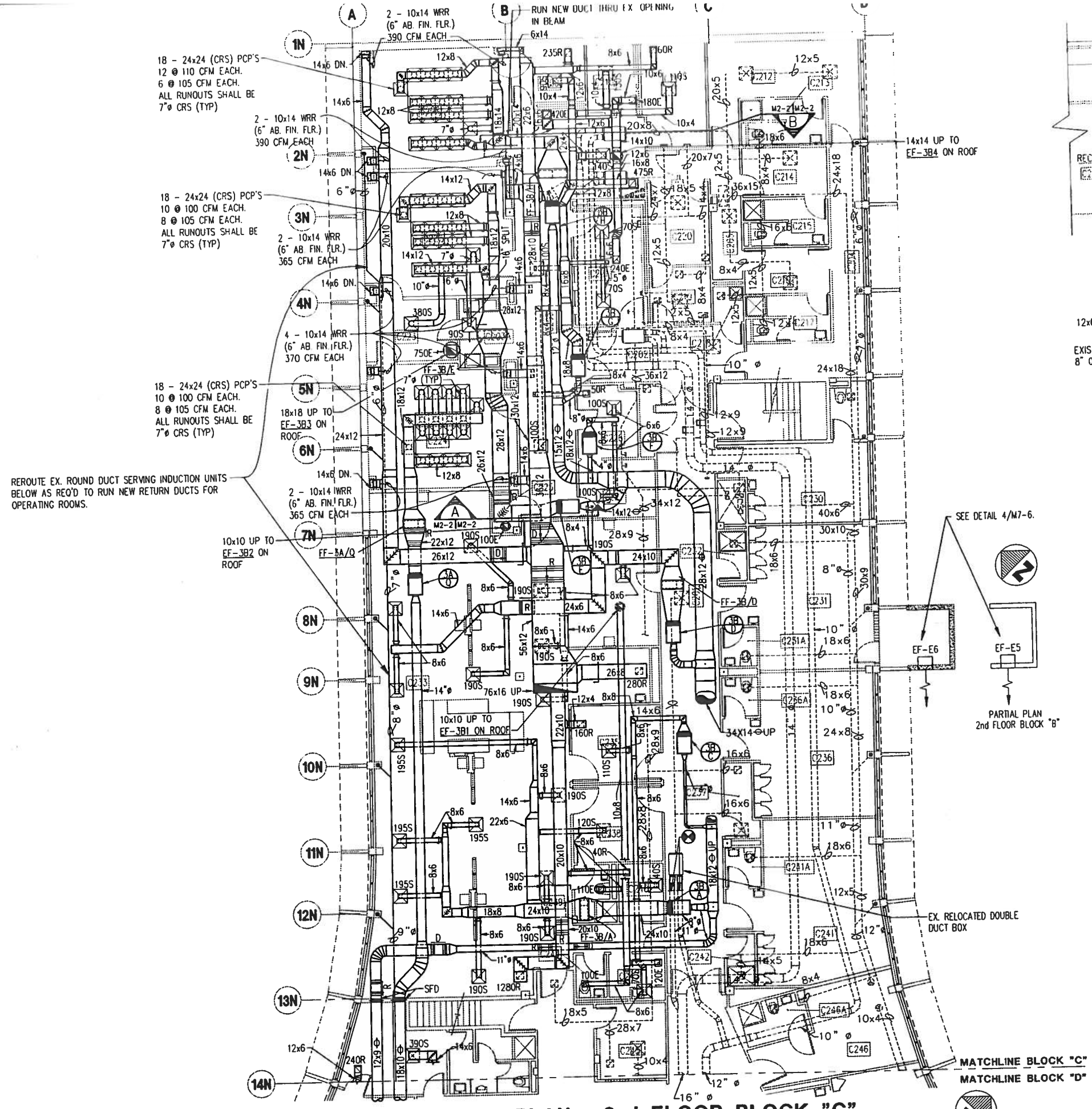

DUCTWORK PLAN - 2nd FLOOR BLOCK "C"

SCALE: 1/8" = 1'-0"

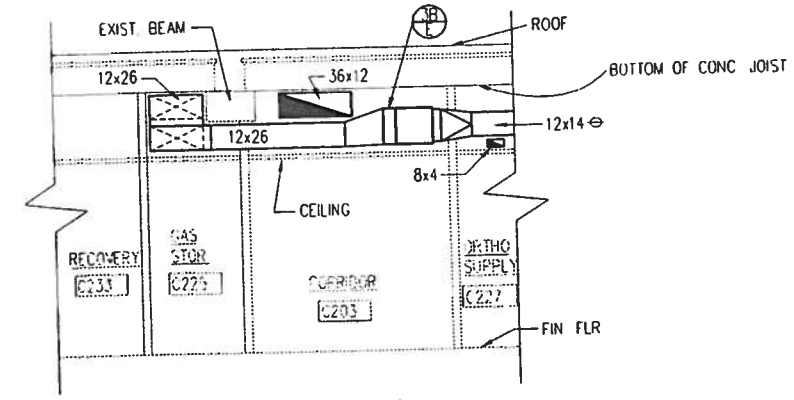

SECTION A

SCALE: 1/4"=1'-0" M2-2 M2-2

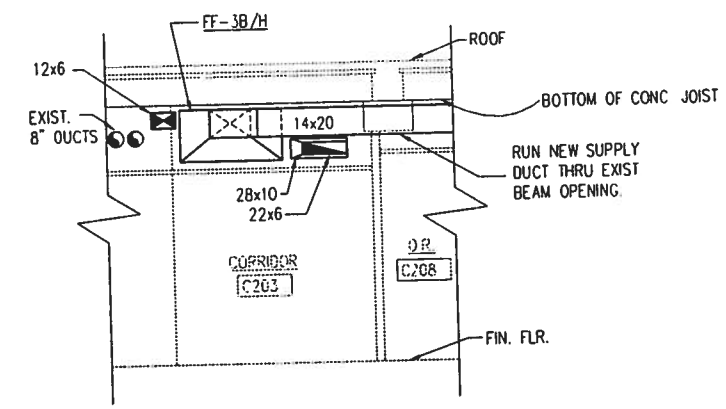

SECTION B

SCALE: 1/4"=1'-0" M2-2 M2-2

NOTES:

1. ALL DUCTWORK & ACCESSORIES DOWNSTREAM OF FINAL FILTERS (FF-) SHALL BE CRS TYPE.
2. ALL FINAL FILTERS (FF-) MOUNTED ABOVE THE CEILINGS SHALL HAVE BOTTOM ACCESS DOORS COORDINATE WITH OTHER DISCIPLINES TO AVOID CONFLICT. FILTER ACCESS MUST BE MAINTAINED. SEE DETAIL 4/M7-8.
3. ALL WALL RETURN REGISTERS OR GRILLES IN O.R.'S, DELIVERY ROOMS AND DENTAL O.R.'S SHALL BE CONSTRUCTED OF CORROSIVE RESISTANT STEEL (CRS). PROVIDE WALL RETURN REGISTERS WITH SPACE FOR 1" NON POWERED ELECTROSTATIC FILTER IN O.R.'S DELIVERY ROOMS & DENTAL O.R.'S.

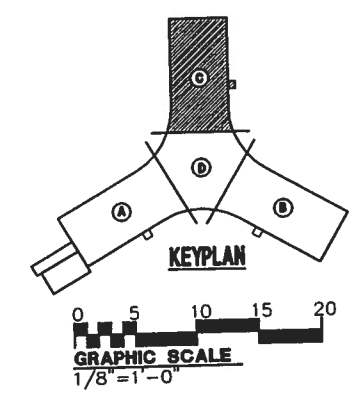

SHERLOCK, SMITH & ADAMS, INC.
ARCHITECTS – ENGINEERS
MONTGOMERY, ALABAMA

U.S. NAVAL STATION ROOSEVELT ROADS, P.R.
REPAIRS TO NAVAL HOSPITAL
DUCTWORK PLAN – 2nd FLOOR BLOCK "C"

CONSTR. CONTR. NO.	SPECIFICATION NO.	NAVFAC DRWG. NO.	TF NO. XXXXX
XXXXX	XXXXX	XXXXX	SHEET ? OF ??

PLATE NO. M2-2

PWC # XXXXX

DEPARTMENT OF THE NAVY
NAVY PUBLIC WORKS CENTER, JACKSONVILLE, FL
NAVAL FACILITIES ENGINEERING COMMAND
U.S. NAVAL STATION ROOSEVELT ROADS, P.R.
REPAIRS TO NAVAL HOSPITAL
DUCTWORK PLAN – 2nd FLOOR BLOCK "C"

REVISION DESCRIPTION	DATE

ENG. DIV. DIR. DATE
SATISFACTORY TO DATE
APPROVED BY: R.J. FLECKER DRAWN BY: P.WAGER

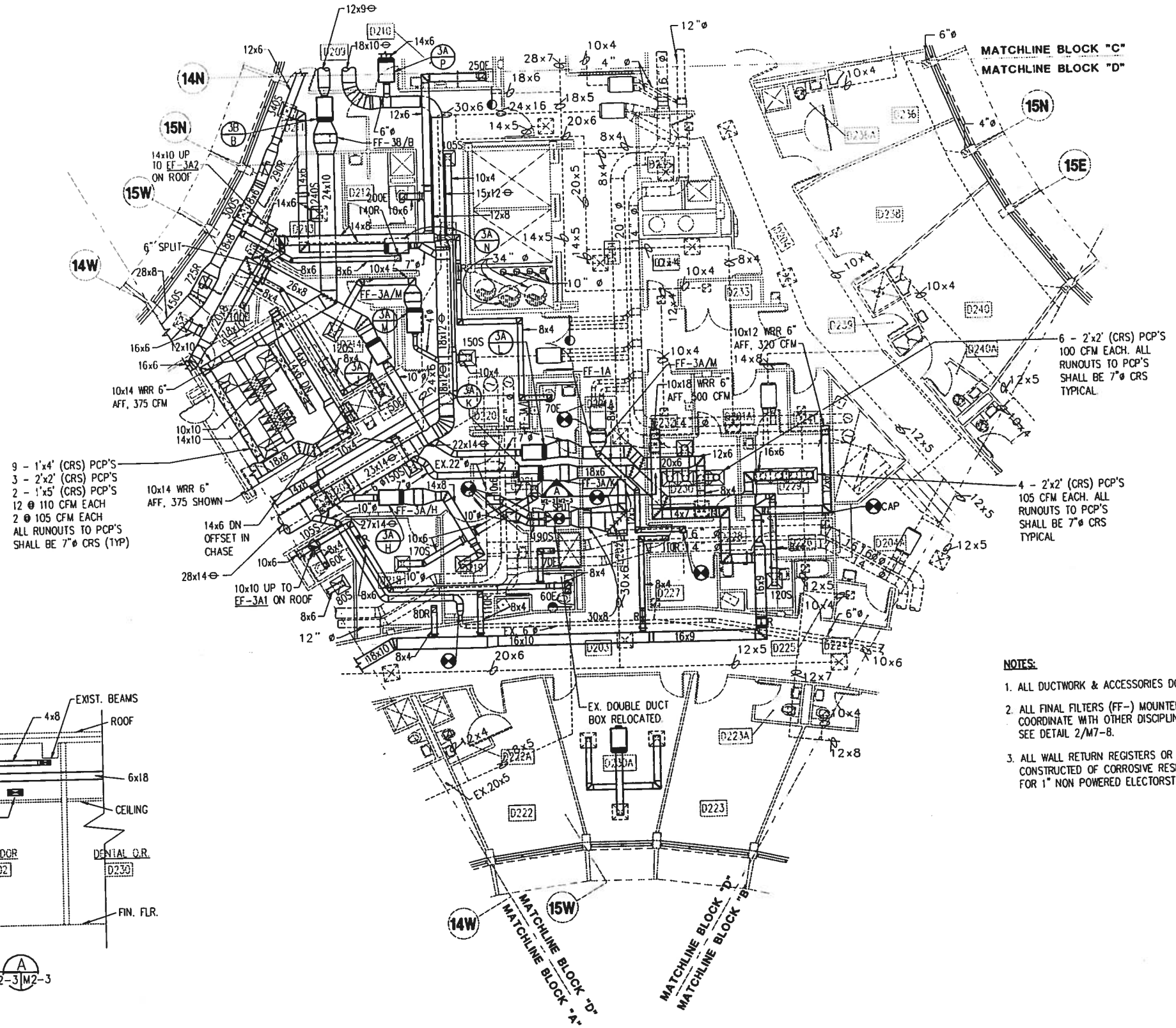

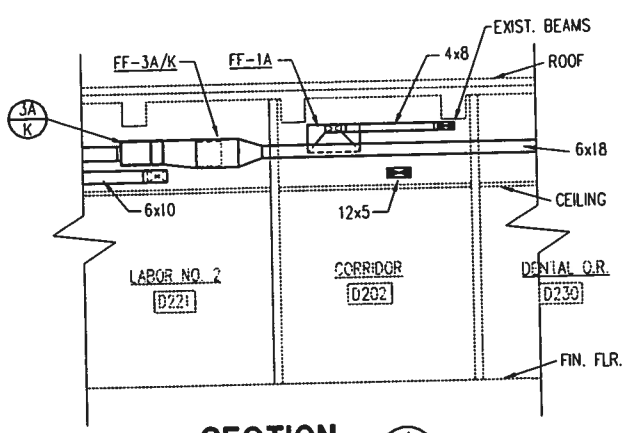

SECTION A
SCALE: ¼"=1'-0" M2-3 M2-3

DUCTWORK PLAN - 2nd FLOOR BLOCK "D"

SCALE: 1/8" = 1'-0"

NOTES:

1. ALL DUCTWORK & ACCESSORIES DOWNSTREAM OF FINAL FILTERS (FF-) SHALL BE CRS TYPE.
2. ALL FINAL FILTERS (FF-) MOUNTED ABOVE THE CEILINGS SHALL HAVE BOTTOM ACCESS DOORS. COORDINATE WITH OTHER DISCIPLINES TO AVOID CONFLICT. FILTER ACCESS MUST BE MAINTAINED. SEE DETAIL 2/M7-8.
3. ALL WALL RETURN REGISTERS OR GRILLES IN O.R.'S, DELIVERY ROOMS AND DENTAL O.R.'S SHALL BE CONSTRUCTED OF CORROSIVE RESISTANT STEEL (CRS). PROVIDE WALL RETURN REGISTERS WITH SPACE FOR 1" NON POWERED ELECTORSTATIC FILTER IN O.R.'S, DELIVERY ROOMS & DENTAL O.R.'S.

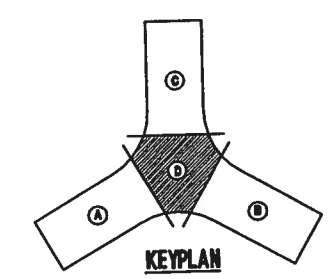

0 5 10 15 20
GRAPHIC SCALE
1/8"=1'-0"

SHERLOCK, SMITH & ADAMS, INC.
ARCHITECTS - ENGINEERS
MONTGOMERY, ALABAMA

U.S. NAVAL STATION ROOSEVELT ROADS, P.R.
REPAIRS TO NAVAL HOSPITAL
DUCTWORK PLAN - 2nd FLOOR BLOCK "D"

CONSTR. CONTR. NO.	SPECIFICATION NO.	NAVFAC DRWG. NO.	TF NO. XXXXX
XXXXX	XXXXX	XXXXX	SHEET ? OF ??

DEPARTMENT OF THE NAVY
NAVY PUBLIC WORKS CENTER, JACKSONVILLE, FL
NAVAL FACILITIES ENGINEERING COMMAND
U.S. NAVAL STATION ROOSEVELT ROADS, P.R.
REPAIRS TO NAVAL HOSPITAL
DUCTWORK PLAN - 2nd FLOOR BLOCK "D"

PLATE NO. M2-3

PWC # XXXXX

DESIGN BY: DUFFEE DRAWN BY: JOINER
CHK BY: YOUNG APPROVED:
ENG. DIV. DIR.: DATE:
SATISFACTORY TO: DATE:
REVISION DESCRIPTION DATE