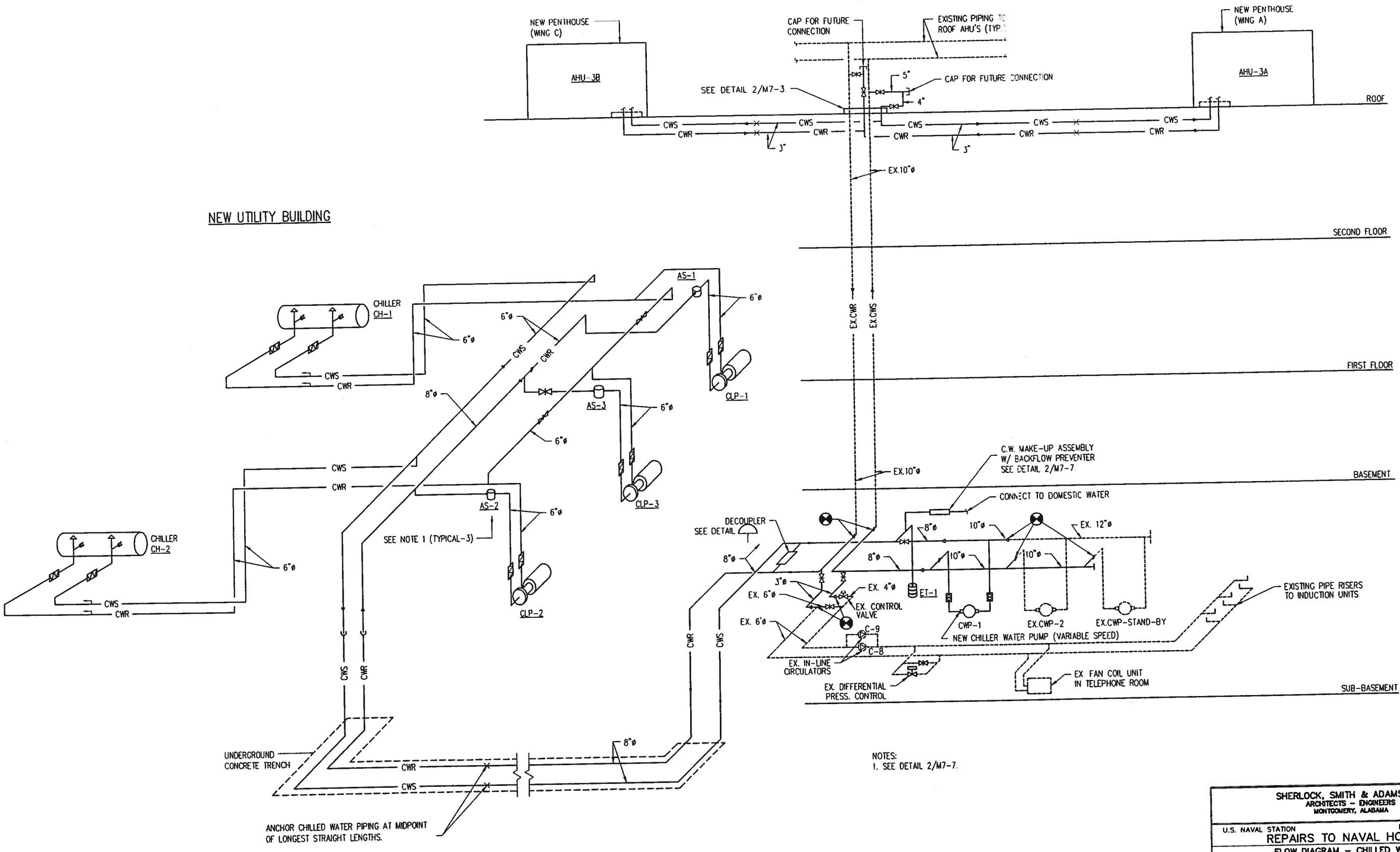


NOTES:
1. SEE DETAIL 2/M7-7.

SHERLOCK, SMITH & ADAMS, INC.
ARCHITECTS – ENGINEERS
MONTGOMERY, ALABAMA

U.S. NAVAL STATION ROOSEVELT ROADS, P.R.
REPAIRS TO NAVAL HOSPITAL
FLOW DIAGRAM – CHILLED WATER

CONSTR. CONTR. NO. XXXXX | SPECIFICATION NO. XXXXX | NAVFAC DRWG. NO. XXXXX | TF NO. XXXXX | SHEET ? OF ??

PLATE NO. M6-1

PWC # XXXXX

DEPARTMENT OF THE NAVY
NAVAL FACILITIES ENGINEERING COMMAND
NAVY PUBLIC WORKS CENTER, JACKSONVILLE, FL
U.S. NAVAL STATION ROOSEVELT ROADS, P.R.
REPAIRS TO NAVAL HOSPITAL
FLOW DIAGRAM – CHILLED WATER

| REVISION DESCRIPTION | DATE |
|---|---|
| | |

ENG. DIV. DIR.: DATE:
SATISFACTORY TO: DATE:

ACADD ID: 11.2001 11 PROGRAM RV: 11.TEDV

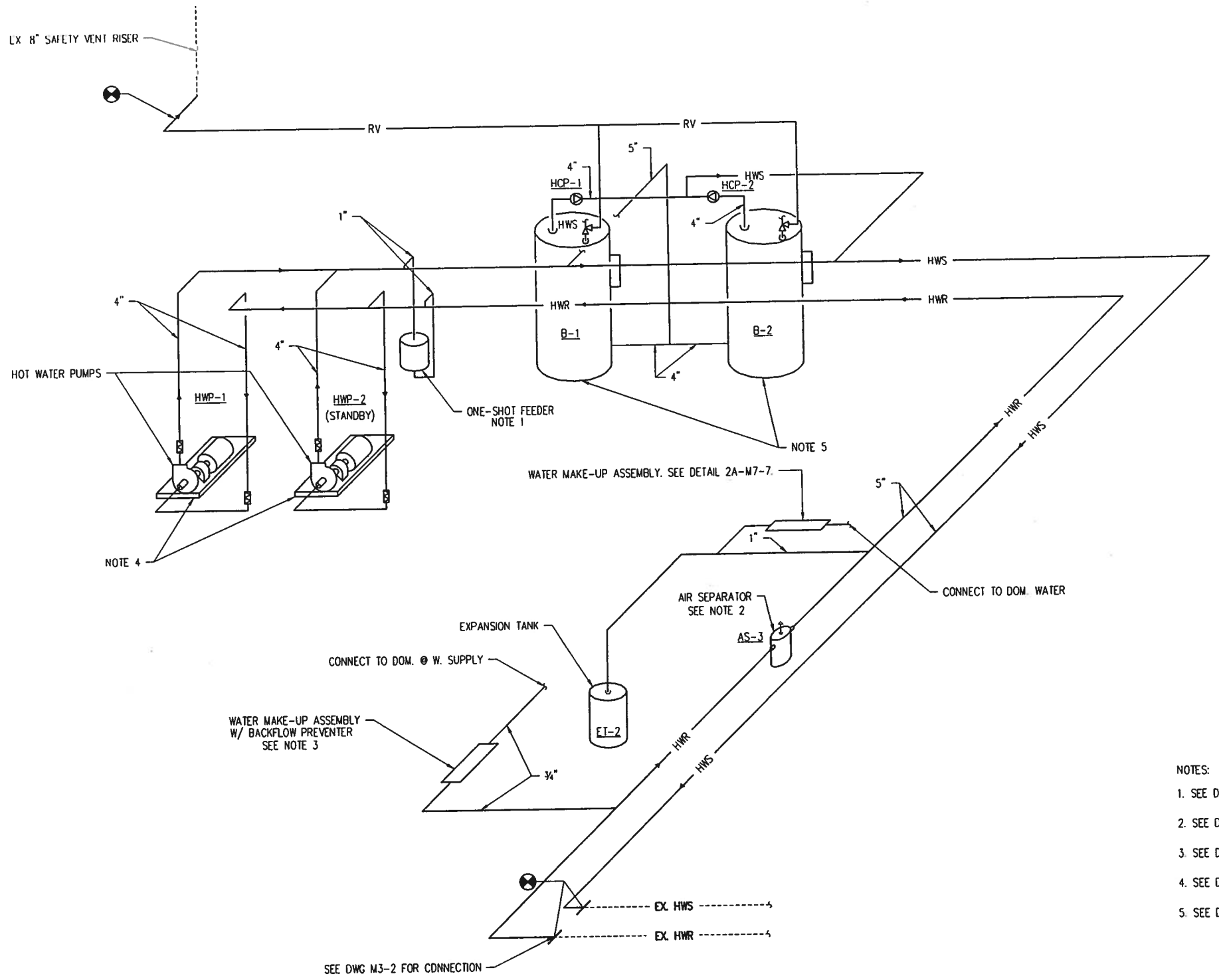


NOTES:

1. SEE DETAIL 6/M7-7 FOR ONE-SHOT FEEDER DETAILS.
2. SEE DETAIL 2/M7-7 FOR AIR SEPARATOR DETAIL.
3. SEE DETAIL 2/M7-7 FOR WATER MAKE-UP ASSEMBLY DETAIL.
4. SEE DETAIL 4/M7-7 FOR PUMP PIPING DETAIL.
5. SEE DETAIL 5/M7-9 FOR HOT WATER HEATING BOILER PIPING DETAIL.

SHERLOCK, SMITH & ADAMS, INC.
ARCHITECTS – ENGINEERS
MONTGOMERY, ALABAMA

U.S. NAVAL STATION ROOSEVELT ROADS, P.R.
REPAIRS TO NAVAL HOSPITAL
FLOW DIAGRAM – HEATING HOT WATER

| CONSTR. CONTR. NO. | SPECIFICATION NO. | NAVFAC DRWG. NO. | TF NO. XXXXX |
|---|---|---|---|
| XXXXX | XXXXX | XXXXX | SHEET ? OF ?? |

DESIGN BY: McDONALD DRAWN BY: AUTERY

ENG. DIV. OPR.: DATE
SATISFACTORY TO: DATE

| REVISION DESCRIPTION | DATE |
|---|---|

NAVAL FACILITIES ENGINEERING COMMAND
DEPARTMENT OF THE NAVY
NAVY PUBLIC WORKS CENTER, JACKSONVILLE, FL
U.S. NAVAL STATION ROOSEVELT ROADS, P.R.
REPAIRS TO NAVAL HOSPITAL
FLOW DIAGRAM – HEATING HOT WATER

PLATE NO.
M6-2

PWC # XXXXX

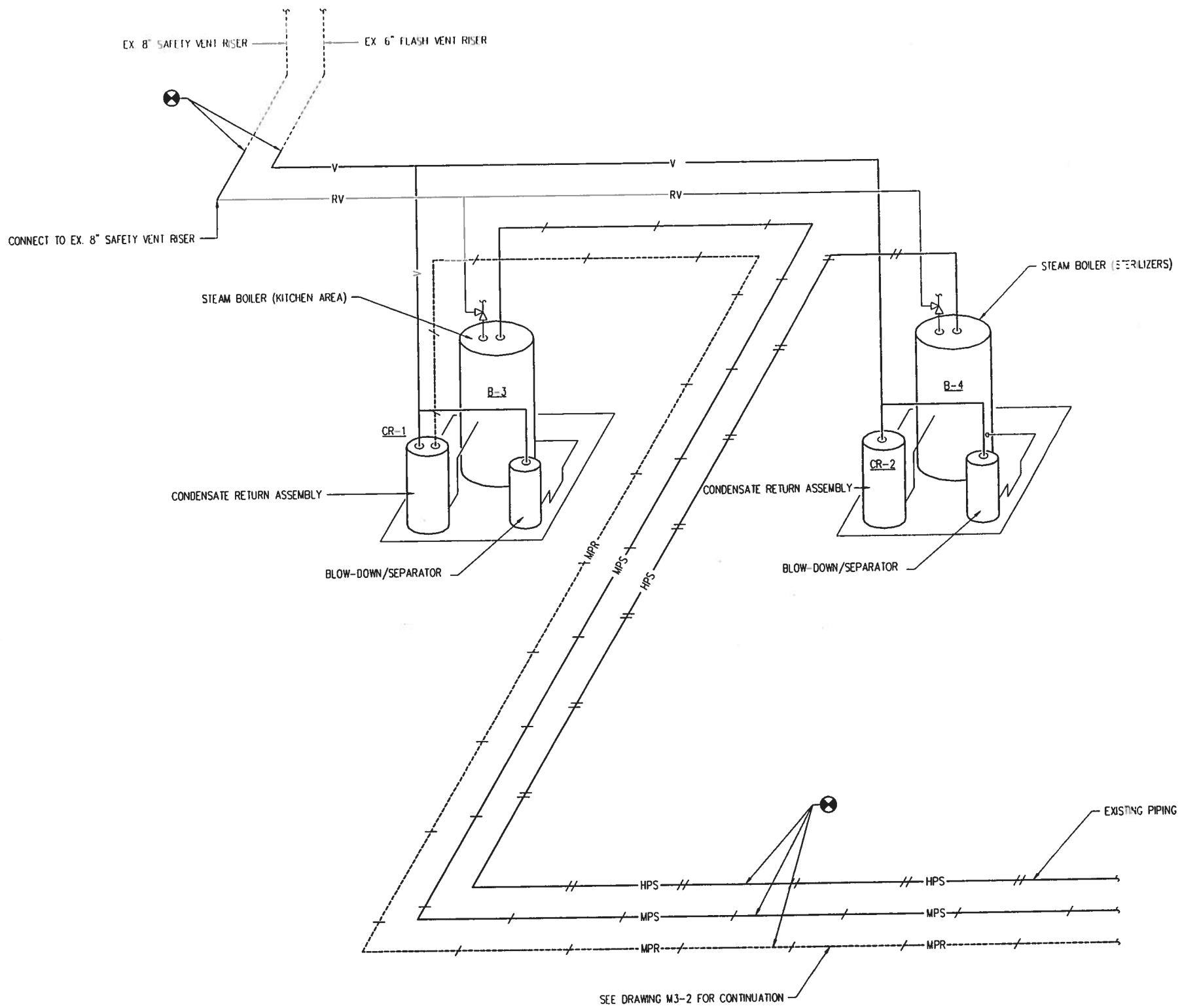


SHERLOCK, SMITH & ADAMS, INC.
ARCHITECTS - ENGINEERS
MONTGOMERY, ALABAMA

U.S. NAVAL STATION ROOSEVELT ROADS, P.R.
REPAIRS TO NAVAL HOSPITAL
FLOW DIAGRAM - STEAM

| CONSTR. CONTR. NO. | SPECIFICATION NO. | NAVFAC DRWG. NO. | TF NO. XXXXX |
|---|---|---|---|
| XXXXX | XXXXX | XXXXX | SHEET ? OF ?? |

DEPARTMENT OF THE NAVY
NAVAL FACILITIES ENGINEERING COMMAND
NAVY PUBLIC WORKS CENTER, JACKSONVILLE, FL
U.S. NAVAL STATION ROOSEVELT ROADS, P.R.
REPAIRS TO NAVAL HOSPITAL
FLOW DIAGRAM - STEAM

PLATE NO.
M6-3

PWC # XXXXX

| REVISION DESCRIPTION | DATE |
|---|---|
| | |

ENG. DIV. DIR.: DATE:
SATISFACTORY TO: DATE:

DESIGN BY: McDONALD DRAWN BY: AUTERY

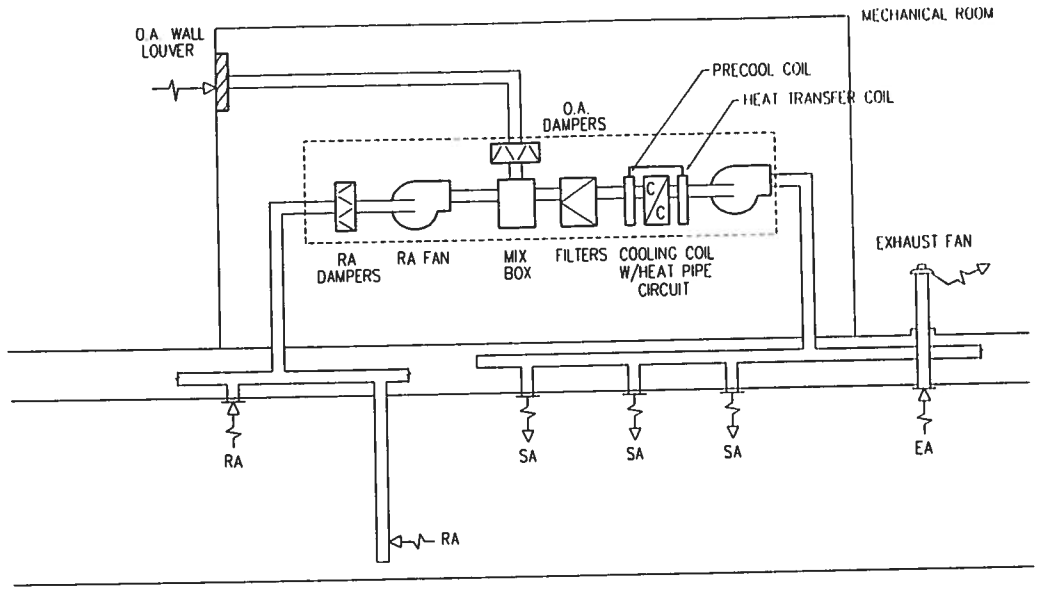


AIR FLOW DIAGRAM
AHU SYSTEMS 3A & 3B (1) M6-4
NOT TO SCALE

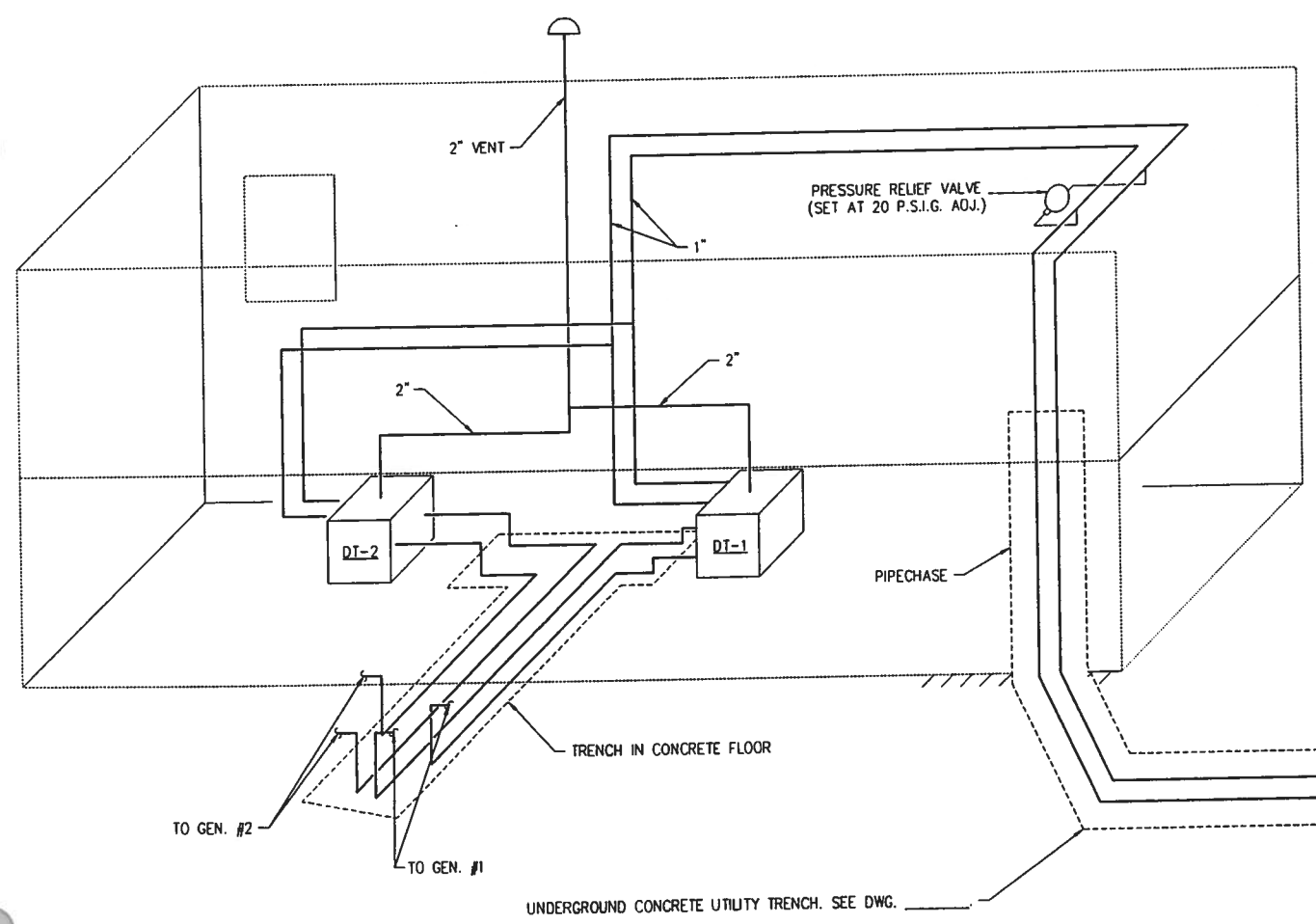


FUEL OIL FLOW DIAGRAM (2) M6-4
NOT TO SCALE

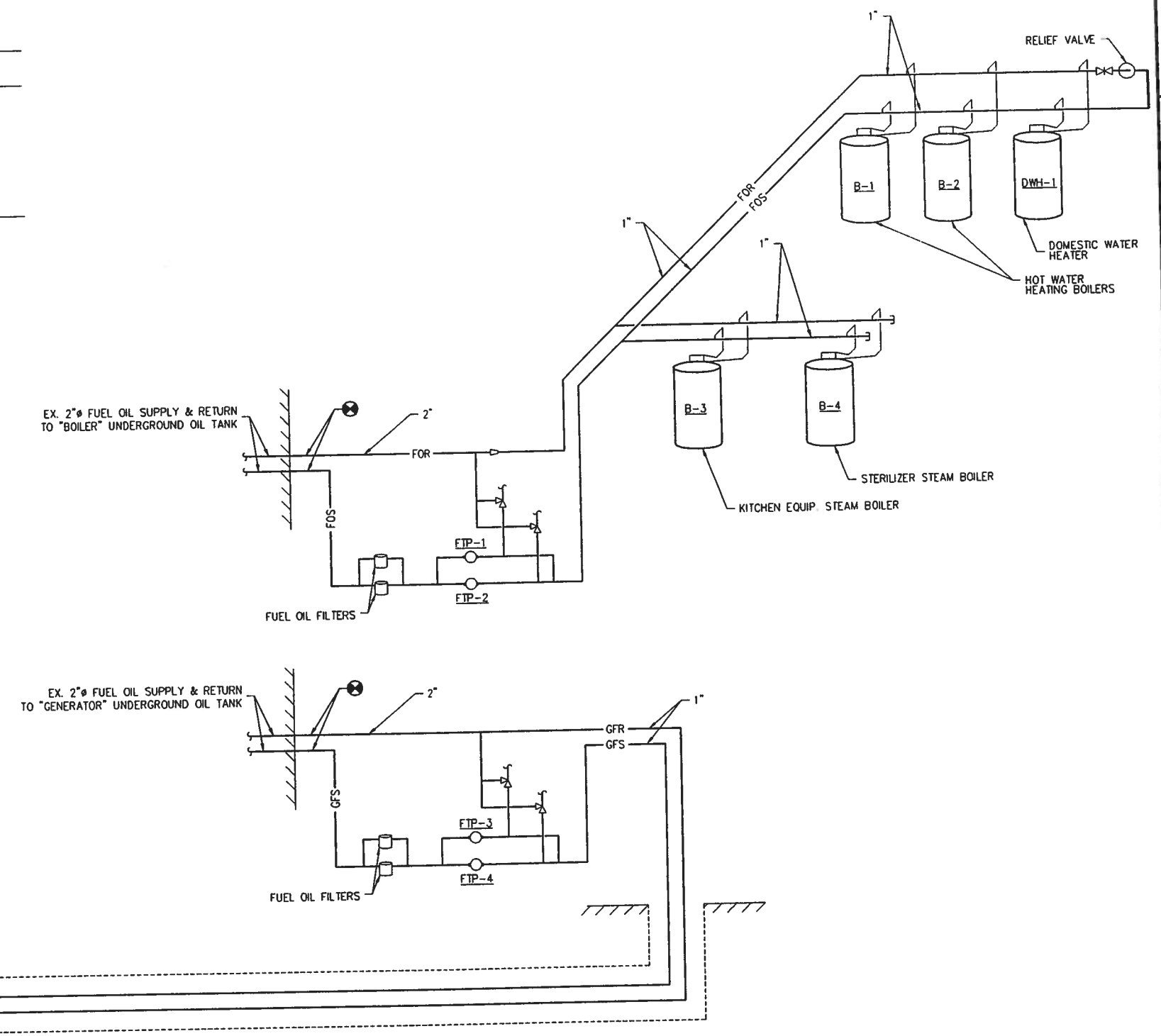


SHERLOCK, SMITH & ADAMS, INC.
ARCHITECTS – ENGINEERS
MONTGOMERY, ALABAMA

U.S. NAVAL STATION — ROOSEVELT ROADS, P.R.
REPAIRS TO NAVAL HOSPITAL
FLOW DIAGRAM – AIR SYSTEM AND FUEL OIL

| CONSTR. CONTR. NO. | SPECIFICATION NO. | NAVFAC DRWG. NO. | TF NO. XXXXX |
|---|---|---|---|
| XXXXX | XXXXX | XXXXX | SHEET ? OF ?? |

DEPARTMENT OF THE NAVY
NAVAL FACILITIES ENGINEERING COMMAND
NAVY PUBLIC WORKS CENTER, JACKSONVILLE, FL

U.S. NAVAL STATION — ROOSEVELT ROADS, P.R.
REPAIRS TO NAVAL HOSPITAL
FLOW DIAGRAM – AIR SYSTEM AND FUEL OIL

PLATE NO.
M6-4

PWC # xxxxx

DESIGN BY: McDONALD DRAWN BY: AUTERY
ENG. DIV. DIR.: DATE:
SATISFACTORY TO: DATE:
REVISION DESCRIPTION DATE

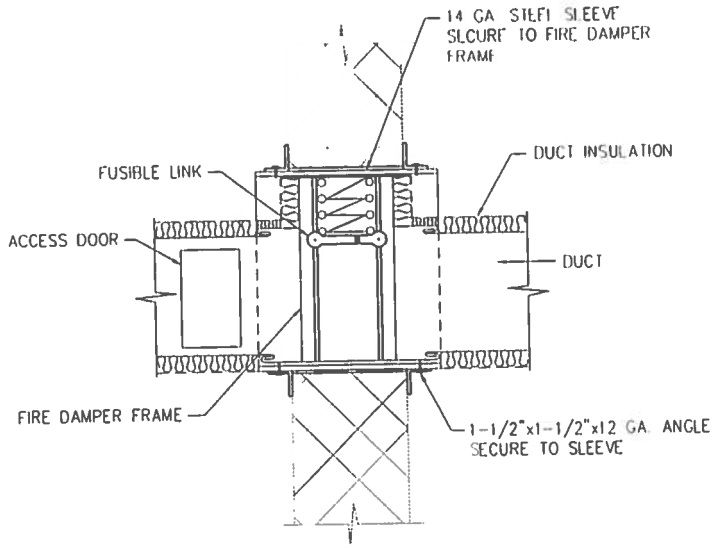


## HORIZONTAL LOW PRESSURE DUCT FIRE DAMPER (INSULATED DUCT)

1 TYP. M7-1

NOT TO SCALE

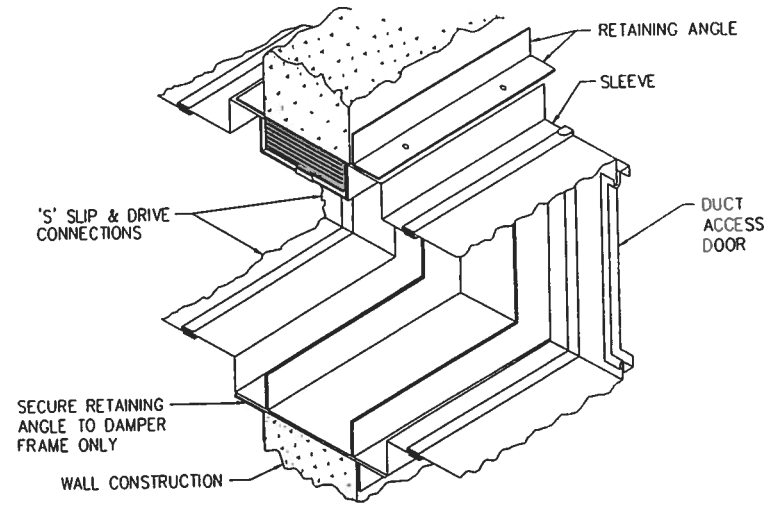


## HORIZONTAL LOW PRESSURE FIRE DAMPER DETAIL (NON-INSULATED DUCT)

2 TYP. M7-1

NOT TO SCALE

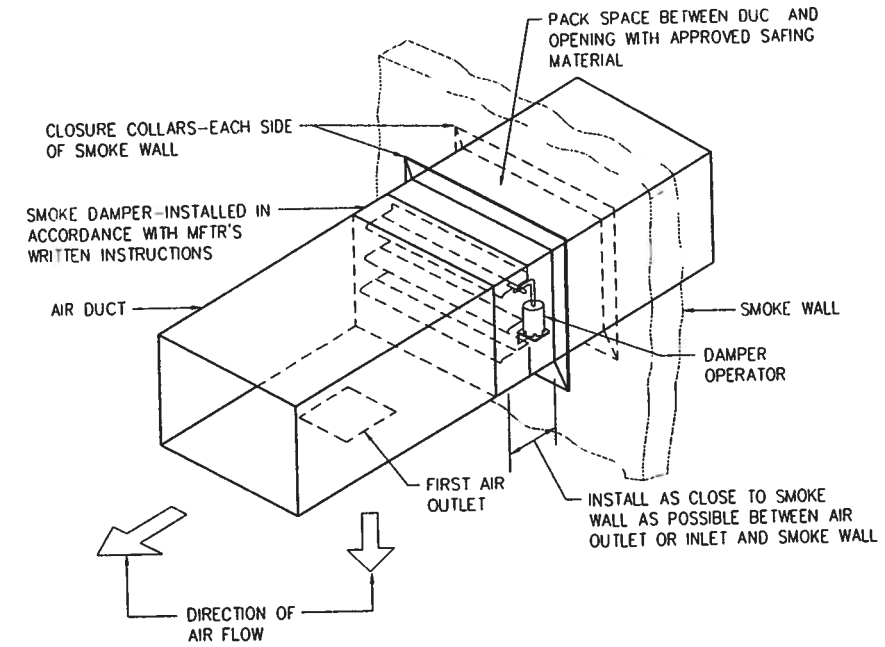


## HORIZONTAL LOW PRESSURE SMOKE DAMPER

3 TYP. M7-1

NOT TO SCALE

NOTE:

LISTED COMBINATION SMOKE/FIRE DAMPER MAY BE USED IN LIEU OF INDIVIDUAL DAMPERS.

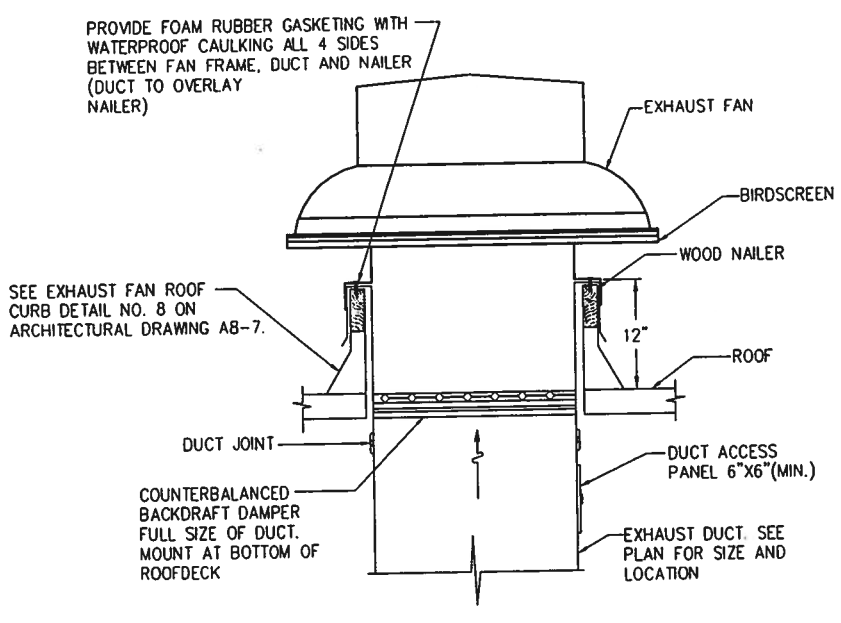


## EXHAUST FAN

4 TYP. M7-1

NOT TO SCALE

DESIGN NOTES

1. DUCT ACCESS SHOULD BE AS BIG AS DUCT WILL ALLOW TO GIVE ACCESS TO DAMPER. SHOW SIZE ON PLAN.
2. IF FAN IS DIRECT DRIVE AND EXHAUSTING CONDITIONED AIR, PROVIDE A BALANCING DAMPER.

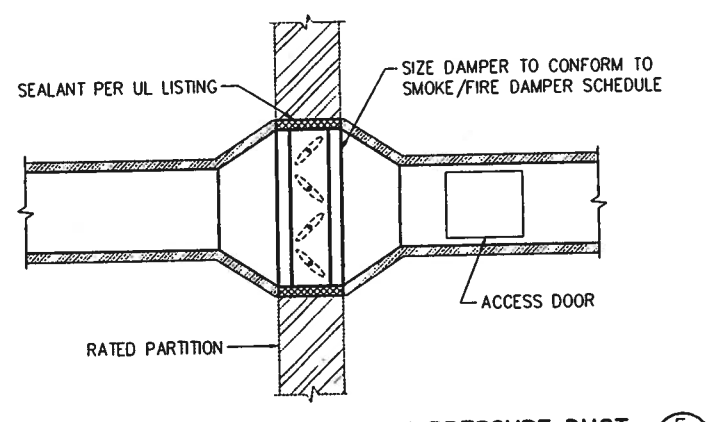


## SMOKE/FIRE DAMPERS IN MEDIUM PRESSURE DUCT

5 TYP. M7-1

NOT TO SCALE

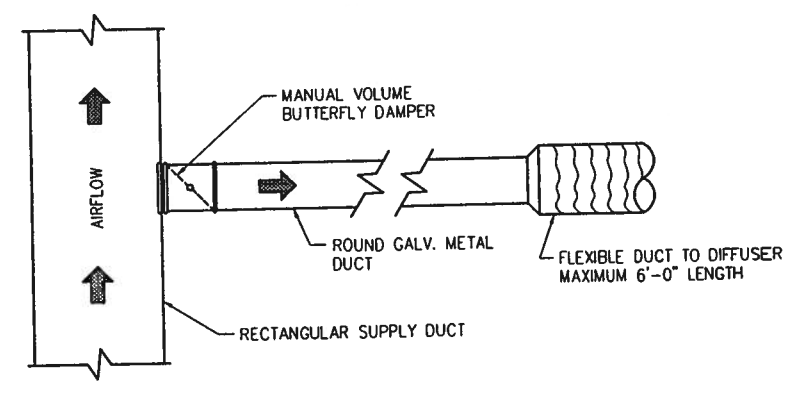


## SPIN-IN AIR EXTRACTOR

6 TYP. M7-1

NOT TO SCALE

### SMOKE/FIRE DAMPER (SFD)

| LOCATION | UL LEAKAGE CLASS | MAX. LEAKAGE @ 1" W.C. | MAX. LEAKAGE @ 4" W.C. | TEMPERATURE CLASSIFICATION | * MAX. LOSS IN INCHES WG | FUSIBLE LINK TEMP °F. | DAMPER TYPE | REMARKS |
|---|---|---|---|---|---|---|---|---|
| MED. PRESSURE SUPPLY | I | 4 CFM/ SQ. FT. | 8 CFM/ SQ. FT. | 350°F | 0.11 @ 2,500 FPM | 165 | AIRFOIL BLADES | |
| LOW PRESSURE SUPPLY & RETURN | II | 10 CFM/ SQ. FT. | – | 350°F | 0.05 @ 1,200 FPM | 165 | – | |

SHERLOCK, SMITH & ADAMS, INC.
ARCHITECTS – ENGINEERS
MONTGOMERY, ALABAMA

U.S. NAVAL STATION ROOSEVELT ROADS, P.R.
REPAIRS TO NAVAL HOSPITAL
DETAILS

CONSTR. CONTR. NO. XXXXX | SPECIFICATION NO. XXXXX | NAVFAC DRWG. NO. XXXXX | TF NO. XXXXX | SHEET ? OF ??

PLATE NO. M7-1

PWC # XXXXX

DEPARTMENT OF THE NAVY
NAVAL FACILITIES ENGINEERING COMMAND
NAVY PUBLIC WORKS CENTER, JACKSONVILLE, FL
U.S. NAVAL STATION ROOSEVELT ROADS, P.R.
REPAIRS TO NAVAL HOSPITAL
DETAILS

DESIGN BY DUFFEE | DRAWN BY TAYLOR
DWG. ON DR.: | DATE | SATISFACTORY TO: | DATE
REVISION DESCRIPTION | DATE

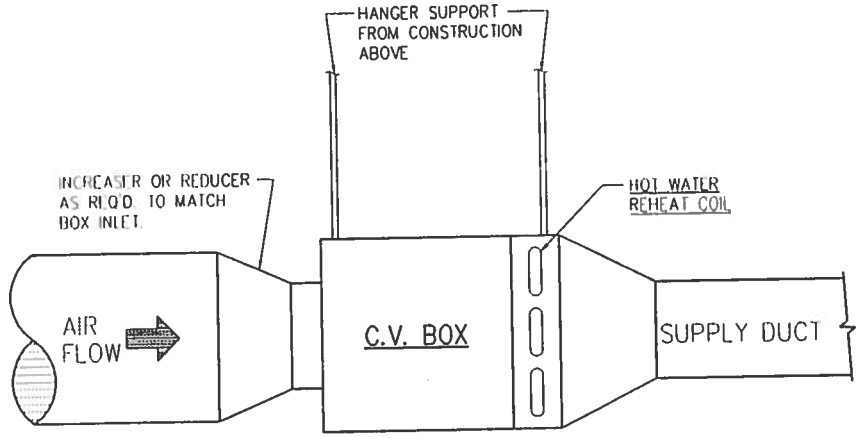


## C.V.T.R. BOX CONFIGURATION (1 / TYP. M7-2)

NOT TO SCALE

NOTE :
REHEAT HOT WATER PIPING SHALL BE SUPPORTED INDEPENDENT OF C.V.T.R. BOX.

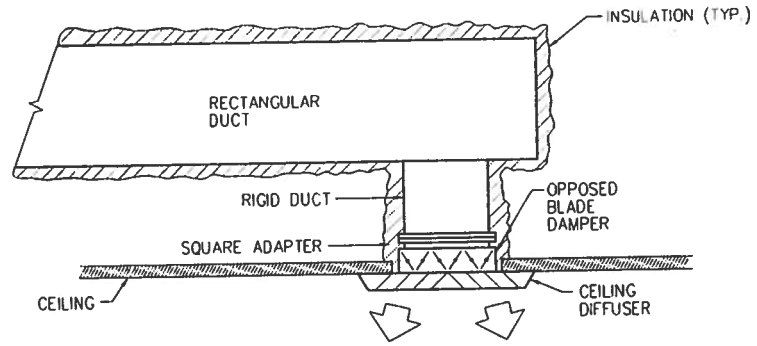


## CEILING DIFFUSER CONNECTION (2 / TYP. M7-2)

NOT TO SCALE

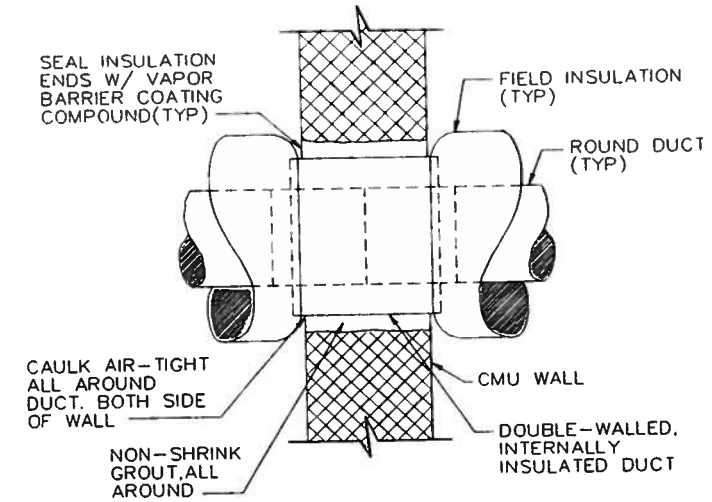


## INSULATED ROUND DUCT PENETRATION (3 / TYP. M7-3)

NOT TO SCALE

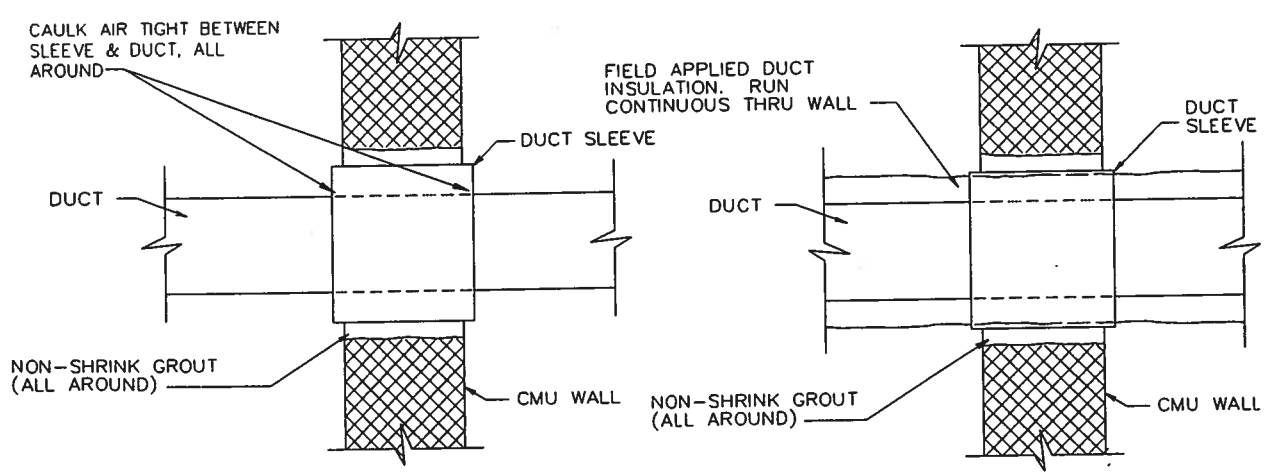


UNINSULATED

INSULATED

## RECTANGULAR DUCT PENETRATION OF WALL (4 / TYP. M7-2)

NOT TO SCALE

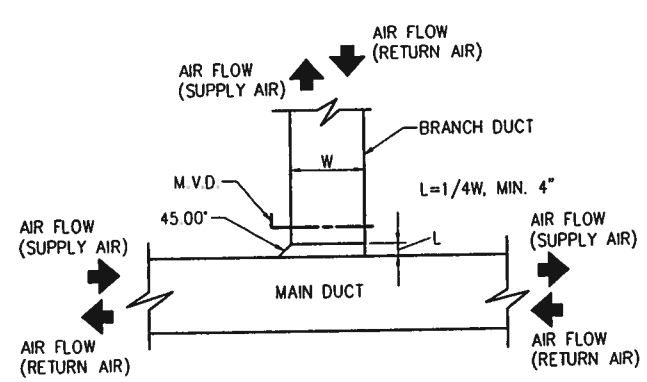


## SUPPLY AND RETURN AIR DUCT BRANCH CONNECTION (5 / TYP. M7-2)

NOT TO SCALE

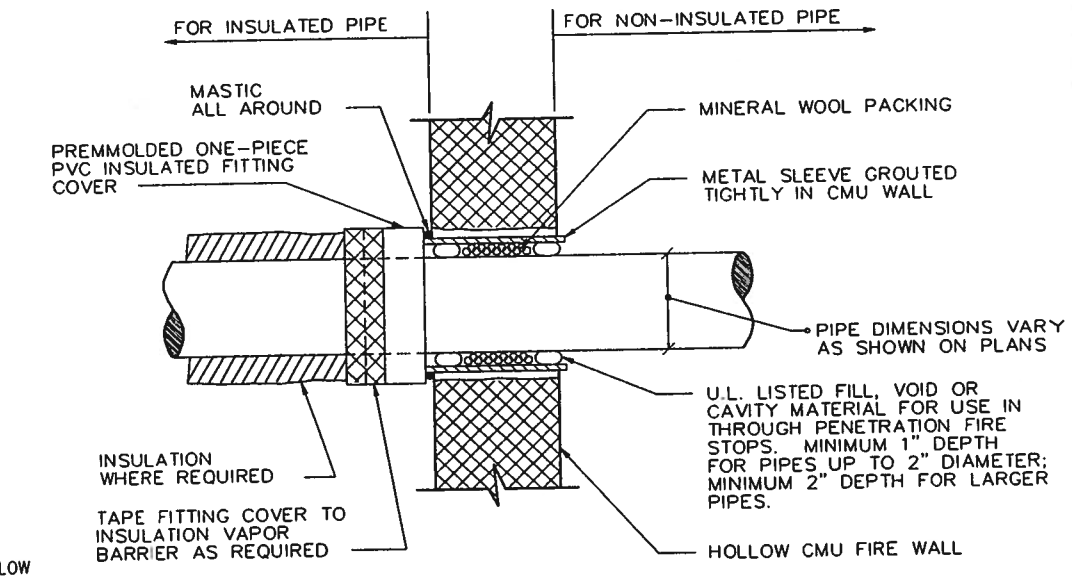


NOTE:
DETAIL ILLUSTRATES PIPE INSULATION ON ONE SIDE OF FIRE RATED WALL. WHERE PIPE IS REQUIRED TO BE INSULATED ON BOTH SIDES, THE INSULATION END TREATMENT SHALL BE DUPLICATED ON BOTH SIDES.

## PIPE PENETRATION OF FIRE WALL (6 / TYP. M7-2)

NOT TO SCALE

SHERLOCK, SMITH & ADAMS, INC.
ARCHITECTS - ENGINEERS
MONTGOMERY, ALABAMA

U.S. NAVAL STATION ROOSEVELT ROADS, P.R.
REPAIRS TO NAVAL HOSPITAL
DETAILS

| CONSTR. CONTR. NO. | SPECIFICATION NO. | NAVFAC DRWG. NO. | TF NO. XXXXX |
|---|---|---|---|
| XXXXX | XXXXX | XXXXX | SHEET ? OF ?? |

DESIGN BY: DUFFEE DRAWN BY: TAYLOR
ENG. DIV. DIR.: DATE:
SATISFACTORY TO: DATE:
REVISION DESCRIPTION DATE

NAVAL FACILITIES ENGINEERING COMMAND
DEPARTMENT OF THE NAVY
NAVY PUBLIC WORKS CENTER, JACKSONVILLE, FL
U.S. NAVAL STATION ROOSEVELT ROADS, P.R.
REPAIRS TO NAVAL HOSPITAL
DETAILS

PLATE NO. M7-2

PWC # xxxxx

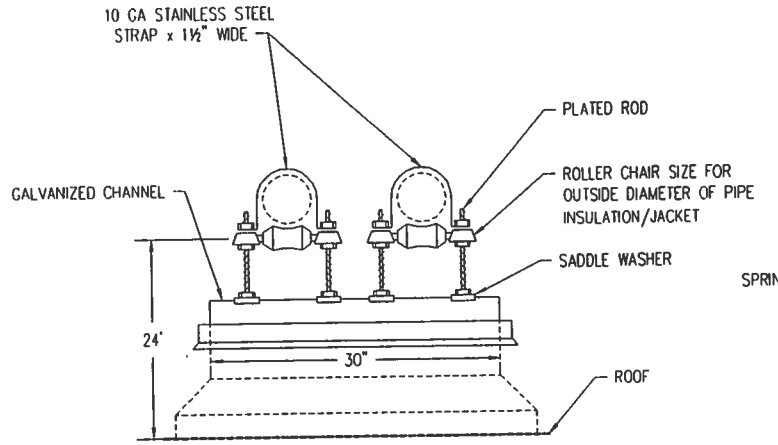


ELEVATION

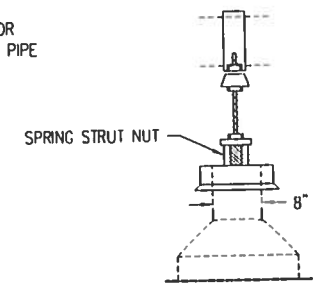


END VIEW

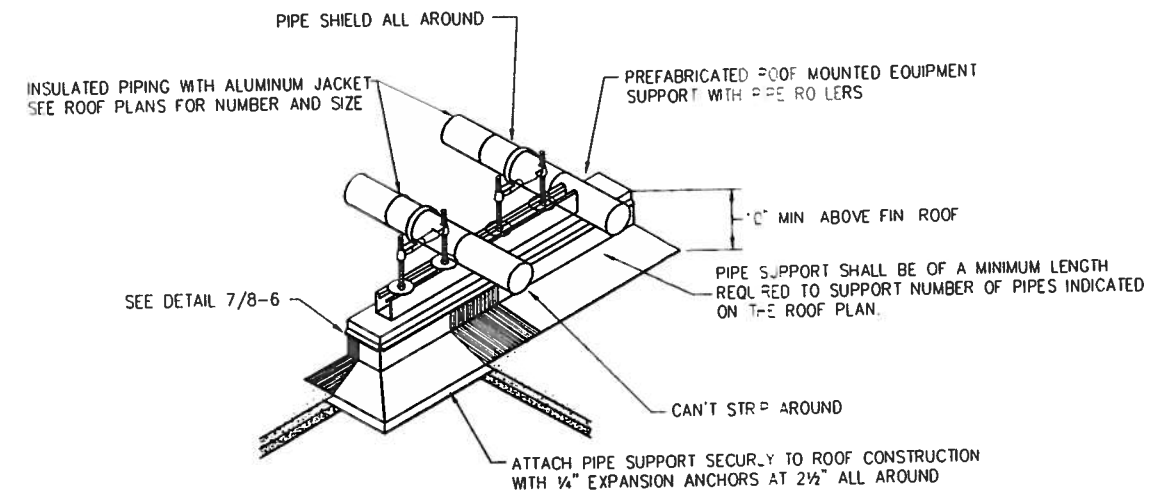


## UTILITY BUILDING ROOFTOP PIPE SUPPORTS (1 / M3-2 | M7-3)

NOT TO SCALE

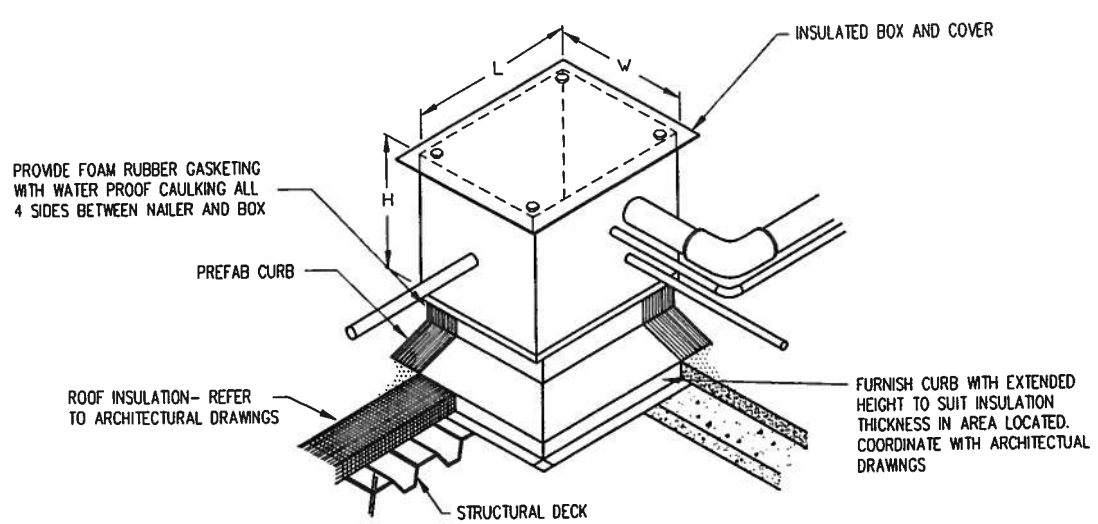


## CUSTOM PIPE BOX (2 / M6-1 | M7-3)

NOT TO SCALE

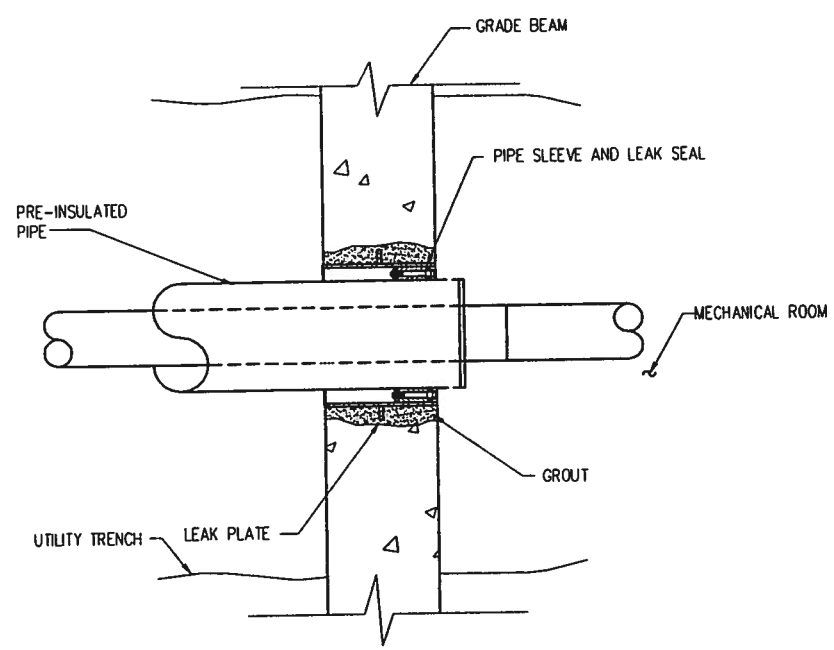


## EXTERIOR WALL PENETRATION (4 / M3-3 | M7-3)

NOT TO SCALE

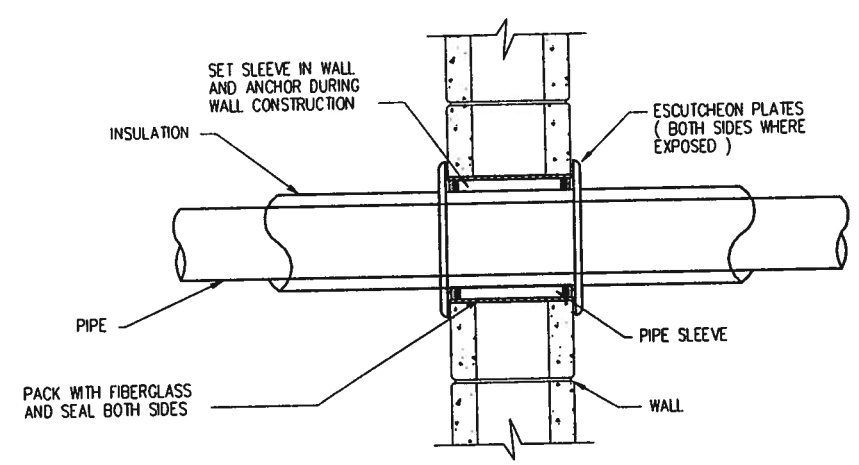


## PIPE SLEEVE THRU EXISTING INTERIOR WALL (5 / TYP | M7-3)

NOT TO SCALE

SHERLOCK, SMITH & ADAMS, INC.
ARCHITECTS – ENGINEERS
MONTGOMERY, ALABAMA

U.S. NAVAL STATION ROOSEVELT ROADS, P.R.
REPAIRS TO NAVAL HOSPITAL
DETAILS

| CONSTR. CONTR. NO. | SPECIFICATION NO. | NAVFAC DRWG. NO. | TF NO. XXXXX |
|---|---|---|---|
| XXXXX | XXXXX | XXXXX | SHEET ? OF ?? |

PLATE NO. M7-3

PWC # XXXXX

DEPARTMENT OF THE NAVY
NAVAL FACILITIES ENGINEERING COMMAND
NAVY PUBLIC WORKS CENTER, JACKSONVILLE, FL
U.S. NAVAL STATION ROOSEVELT ROADS, P.R.
REPAIRS TO NAVAL HOSPITAL
DETAILS

| REVISION DESCRIPTION | DATE | ENG. DIV. DR. | DATE | SATISFACTORY TO | DATE |
|---|---|---|---|---|---|

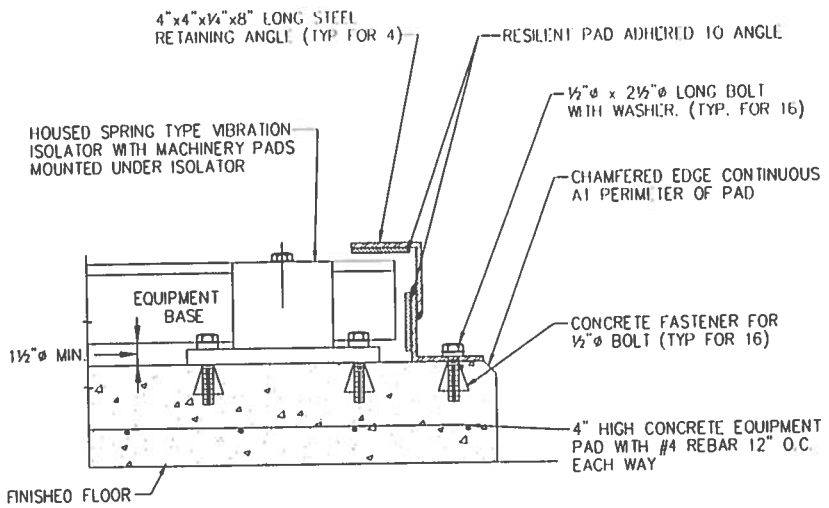


VIBRATION ISOLATOR (BASE) 1 TYP. M7-4
NOT TO SCALE

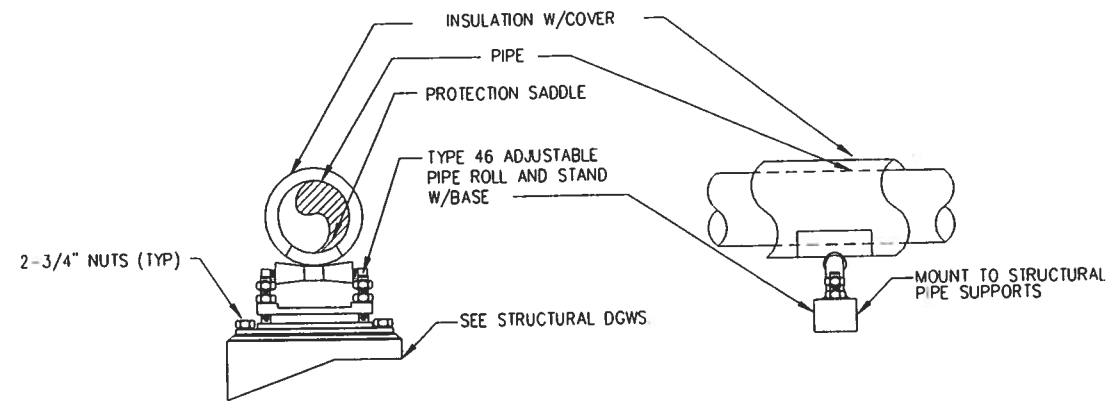


PIPE SUPPORT 2 TYP. M7-4

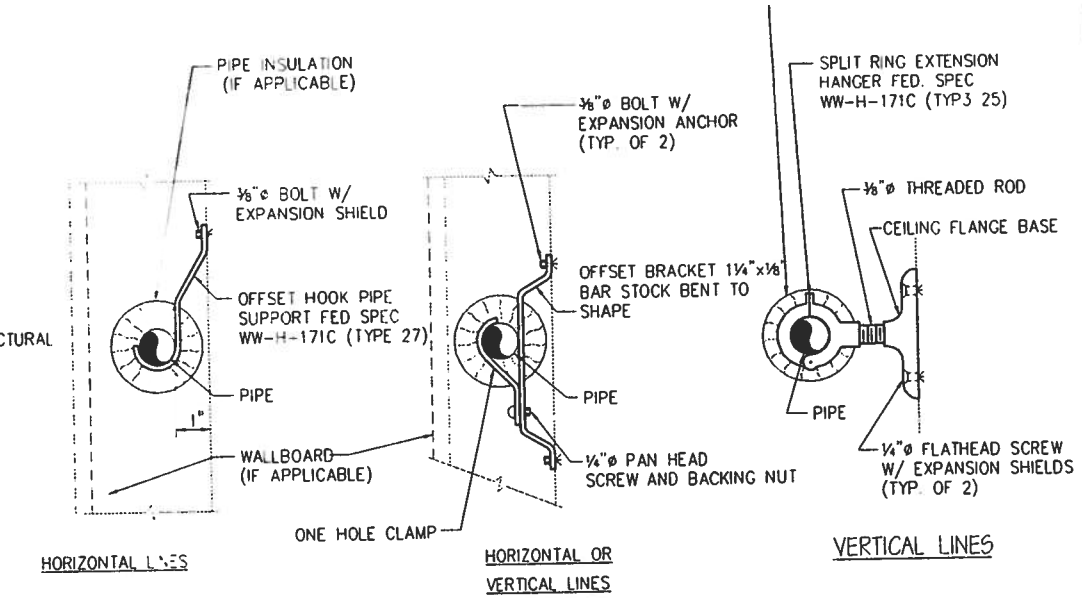


WALL SUPPORTS 3 TYP. M7-4

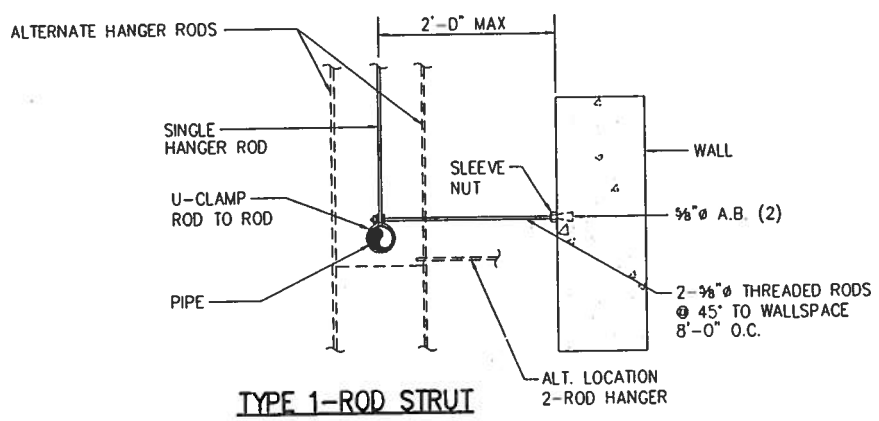


TYPE 1-ROD STRUT

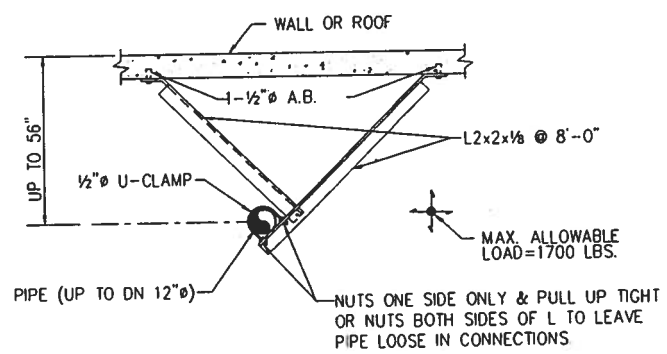


VERTICAL & HORIZONTAL SUPPORT PARALLEL TO HORIZONTAL PIPE 4 TYP. M7-4

NOTE: AT ROOF BRACING WILL BE BOLTED TO ANGLE IRON IN LIEU OF CONC. ANGLE IRON SHALL BE SPANNED BETWEEN BAR JOISTS.

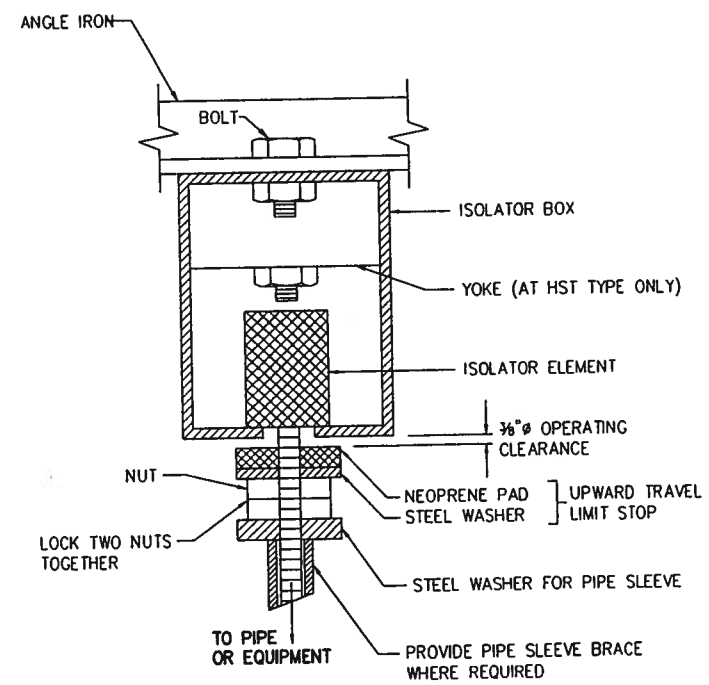


NOTES:

1. DETAIL APPLIES TO TYPE HN, HS OR HST VIBRATION ISOLATION HANGERS.
2. TYPE VERTICAL TRAVEL LIMIT STOP AFTER SYSTEM IS OPERATIONAL.
3. ADJUST TRAVEL LIMIT STOP AFTER SYSTEM IS OPERATIONAL.
4. UPWARD TRAVEL LIMIT STOP MUST NOT SHORT CIRCUIT ISOLATOR OR REDUCE ISOLATOR PERFORMANCE

VIBRATION ISOLATOR 7 TYP. M7-4

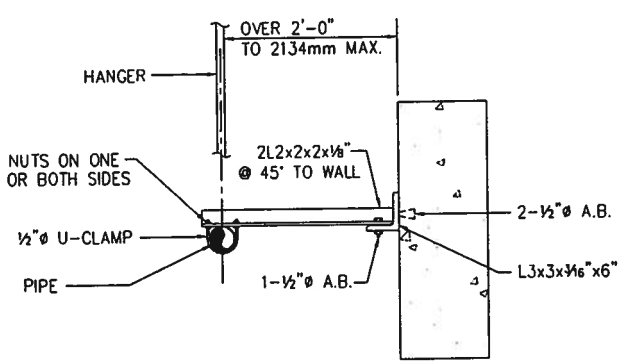


TYPE 2-ANGLE STRUT
NOT TO SCALE

LATERAL SUPPORT PERPENDIUCLAR TO HORIZ. PIPES TP ADJACENT WALL WHEN VERTICALLY SUPPORTED BY HANGERS-8'-0" MAX. SPACING. 5 TYP. M7-4

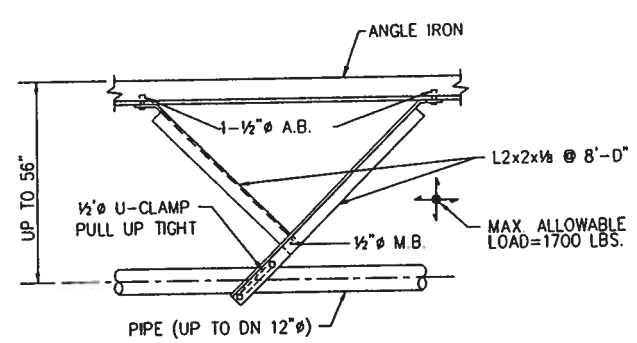


VERTICAL & HORIZONTAL SUPPORT PARALLEL TO HORIZONTAL PIPE 6 TYP. M7-4

SHERLOCK, SMITH & ADAMS, INC.
ARCHITECTS – ENGINEERS
MONTGOMERY, ALABAMA

U.S. NAVAL STATION ROOSEVELT ROADS, P.R.
REPAIRS TO NAVAL HOSPITAL
DETAILS

| CONSTR. CONTR. NO. | SPECIFICATION NO. | NAVFAC DRWG. NO. | TF NO. XXXXX |
|---|---|---|---|
| XXXXX | XXXXX | XXXXX | SHEET ? OF ?? |

DESIGN BY: DUFFEE DRAWN BY: TAYLOR
ENG. DIV. DIR.: DATE: SATISFACTORY TO: DATE:
REVISION DESCRIPTION DATE

NAVAL FACILITIES ENGINEERING COMMAND
DEPARTMENT OF THE NAVY
NAVY PUBLIC WORKS CENTER, JACKSONVILLE, FL
U.S. NAVAL STATION ROOSEVELT ROADS, P.R.
REPAIRS TO NAVAL HOSPITAL
DETAILS

PLATE NO. M7-4

PWC # XXXXX

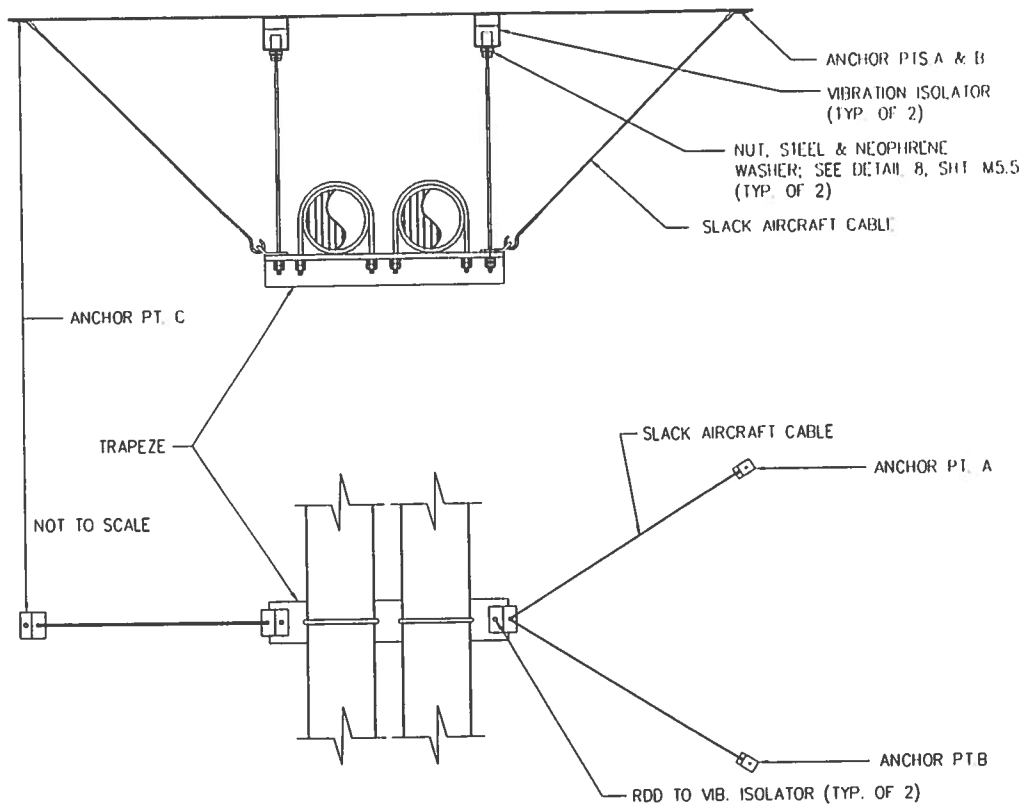


NOTES:
ISOLATORS MUST BE MODIFIED WITH UPWARD LIMIT TRAVEL STOP.

RADIATION MOUNTING (1) TYP. M7-5
NOT TO SCALE

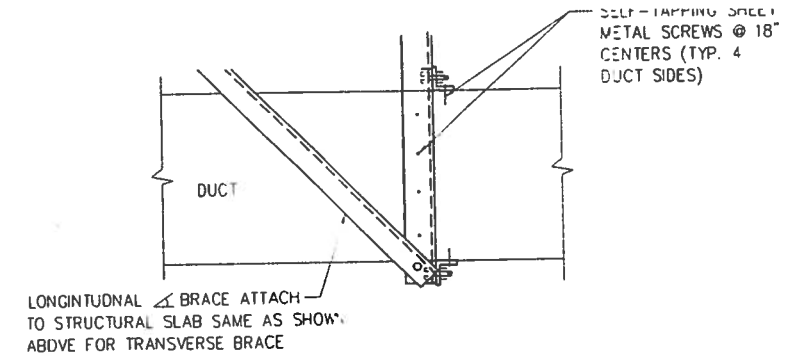


SECTION "A-A"

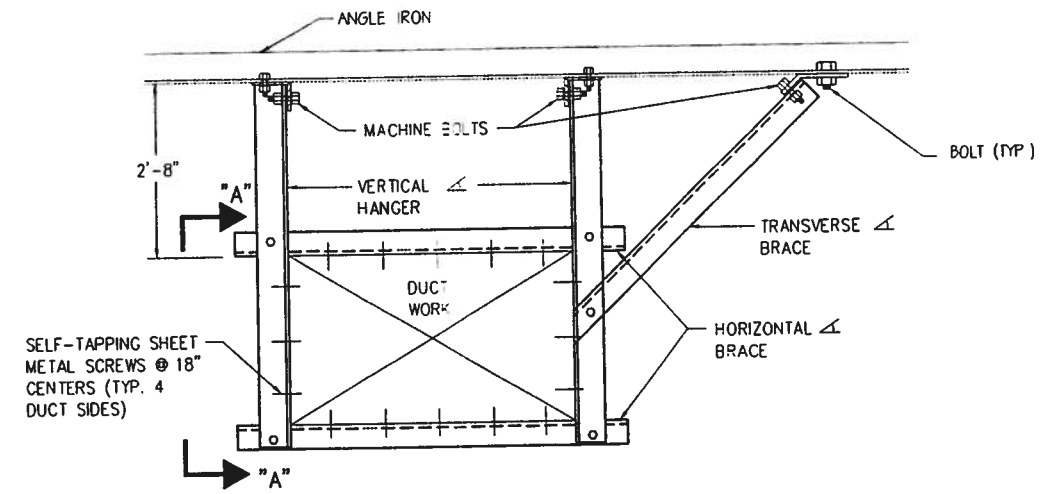


LATERAL RESTRAINT FOR DUCTWORK (2) TYP. M7-5
NOT TO SCALE

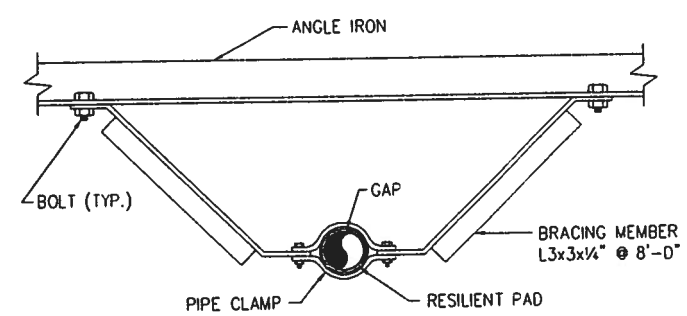


TRANSVERSE BRACING

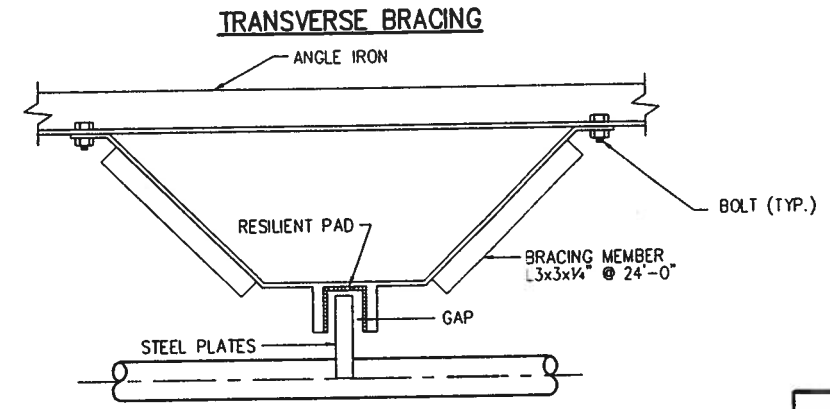


BRACING FOR VIBRATION ISOLATED PIPES (4) TYP. M7-5
NOT TO SCALE

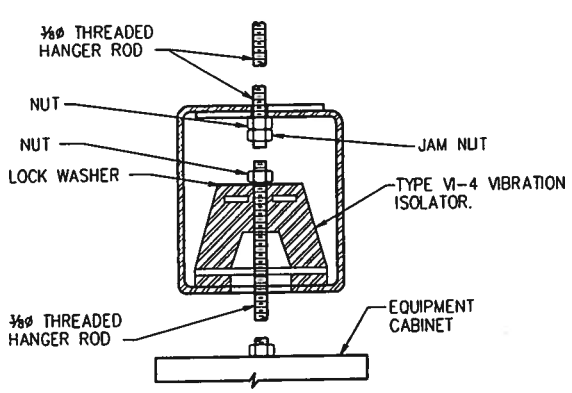


VIBRATION ISOLATOR (3) TYP. M7-5
NOT TO SCALE

SHERLOCK, SMITH & ADAMS, INC.
ARCHITECTS – ENGINEERS
MONTGOMERY, ALABAMA

U.S. NAVAL STATION ROOSEVELT ROADS, P.R.
REPAIRS TO NAVAL HOSPITAL
DETAILS

| CONSTR. CONTR. NO. | SPECIFICATION NO. | NAVFAC DRWG. NO. | TF NO. XXXXX |
|---|---|---|---|
| XXXXX | XXXXX | XXXXX | SHEET ? OF ?? |

DEPARTMENT OF THE NAVY
NAVY PUBLIC WORKS CENTER, JACKSONVILLE, FL
NAVAL FACILITIES ENGINEERING COMMAND
U.S. NAVAL STATION ROOSEVELT ROADS, P.R.
REPAIRS TO NAVAL HOSPITAL
DETAILS

REVISION DESCRIPTION
DATE
ENG. DIV. DIR.:
DATE:
SATISFACTORY TO:
DATE:

PLATE NO.
M7-5

PWC # XXXXX