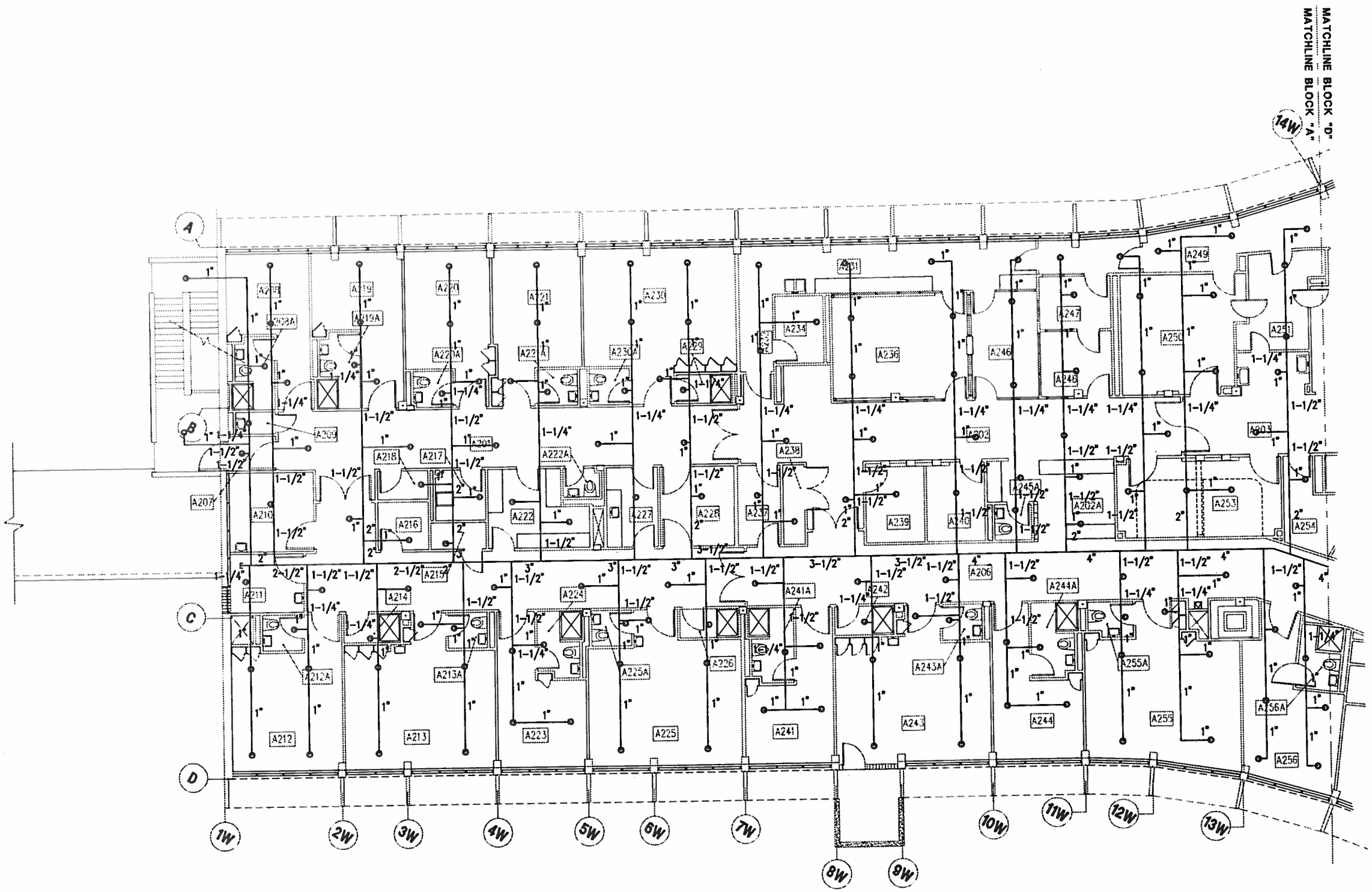

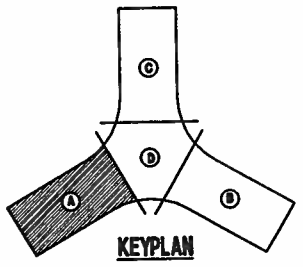

KEYPLAN

0 5 10 15 20
GRAPHIC SCALE
1/8"=1'-0"

FIRE PROTECTION SECOND FLOOR PLAN BLOCK "A"

SCALE: 1/8" = 1'-0"

P:\95-113\ME\113P0931.dwg, (48|96), 04/23/96 at 14:03:07 by WINGARD_N

SHERLOCK, SMITH & ADAMS, INC.
ARCHITECTS - ENGINEERS
MONTGOMERY, ALABAMA

U.S. NAVAL STATION ROOSEVELT ROADS, P.R.
REPAIRS TO NAVAL HOSPITAL
FIRE PROTECTION SECOND FLOOR PLAN BLOCK "A"

CONSTR. CONTR. NO.	SPECIFICATION NO.	NAVFAC DRWG. NO.	TF NO. XXXXX
XXXXX	XXXXX	XXXXX	SHEET ? OF ??

DEPARTMENT OF THE NAVY
NAVAL FACILITIES ENGINEERING COMMAND
NAVY PUBLIC WORKS CENTER, JACKSONVILLE, FL
U.S. NAVAL STATION ROOSEVELT ROADS, P.R.

PLATE NO. F

PWC #

REVISION DESCRIPTION | DATE

ENG. DIV. DIR.: | DATE

SEAL AREA

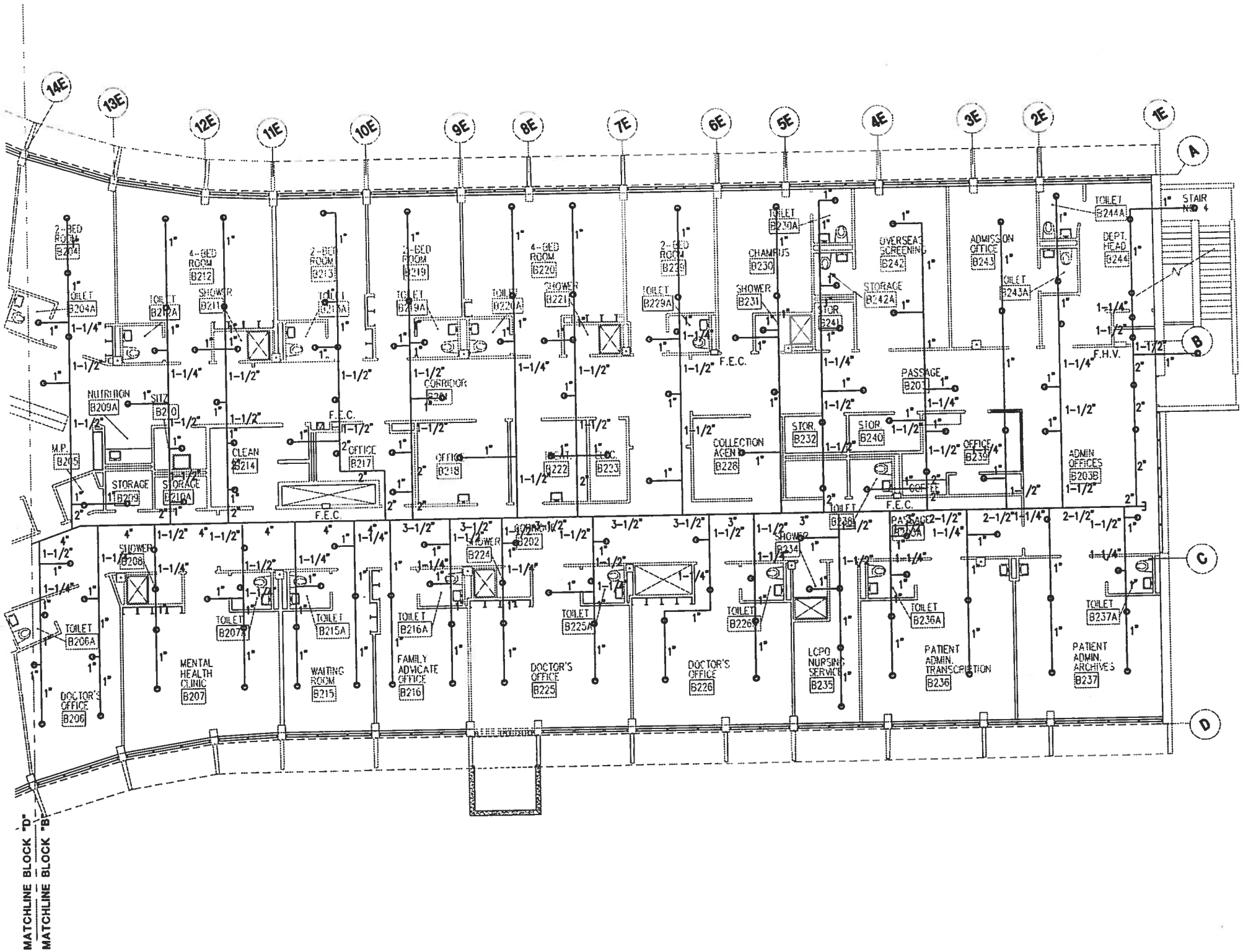

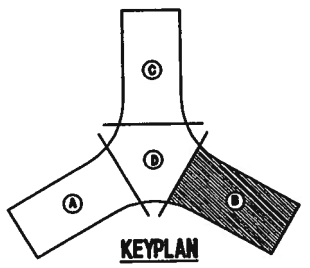

0 5 10 15 20
GRAPHIC SCALE
1/8"=1'-0"

FIRE PROTECTION SECOND FLOOR PLAN BLOCK "B"

SCALE: 1/8" = 1'-0"

P:\95-113\ME\113P0902.dwg, (48|96), 04/23/96 at 14:02:16 by MNGARD_M

SHERLOCK, SMITH & ADAMS, INC.
ARCHITECTS – ENGINEERS
MONTGOMERY, ALABAMA

U.S. NAVAL STATION ROOSEVELT ROADS, P.R.
REPAIRS TO NAVAL HOSPITAL
FIRE PROTECTION SECOND FLOOR PLAN BLOCK "B"

CONSTR. CONTR. NO.	SPECIFICATION NO.	NAVFAC DRWG. NO.	TF NO. XXXXX
XXXXX	XXXXX	XXXXX	SHEET ? OF ??

DEPARTMENT OF THE NAVY
NAVAL FACILITIES ENGINEERING COMMAND
NAVY PUBLIC WORKS CENTER, JACKSONVILLE, FL

PLATE NO. F

PWC

SEAL AREA

DIS. DIV. DRL.
DATE

DATE
REVISION DESCRIPTION

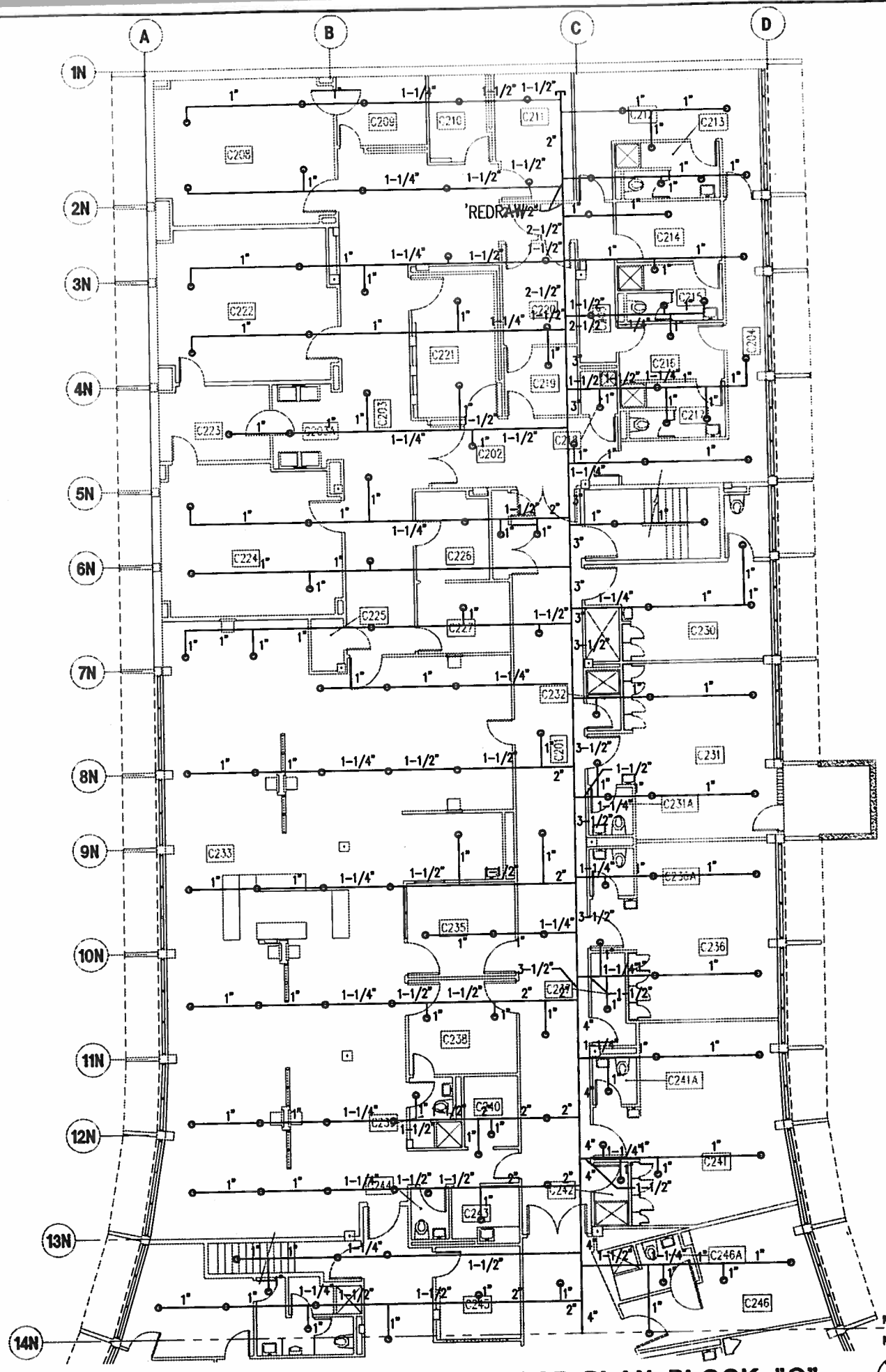

MATCHLINE BLOCK "C"

MATCHLINE BLOCK "D"

FIRE PROTECTION SECOND FLOOR PLAN BLOCK "C"

SCALE: 1/8" = 1'-0"

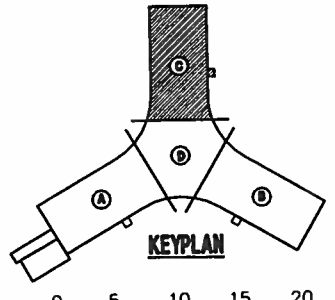

KEYPLAN

0 5 10 15 20

GRAPHIC SCALE

1/8" =1'-0"

P:\95-113\ME\113P0903.dwg, (48|96), 04/23/96 at 14:00:52 by WINGARD_M

SHERLOCK, SMITH & ADAMS, INC.
ARCHITECTS – ENGINEERS
MONTGOMERY, ALABAMA

U.S. NAVAL STATION ROOSEVELT ROADS, P.R.

REPAIRS TO NAVAL HOSPITAL

FIRE PROTECTION SECOND FLOOR PLAN BLOCK "C"

CONSTR. CONTR. NO.	SPECIFICATION NO.	NAVFAC DRWG. NO.	TF NO. XXXXX
XXXXX	XXXXX	XXXXX	SHEET ? OF ??

SEAL AREA

DIC. DV. DR.

DATE

REVISION DESCRIPTION

DATE

NAVAL FACILITIES ENGINEERING COMMAND

DEPARTMENT OF THE NAVY

NAVY PUBLIC WORKS CENTER, JACKSONVILLE, FL

PLATE NO.

F

PWC

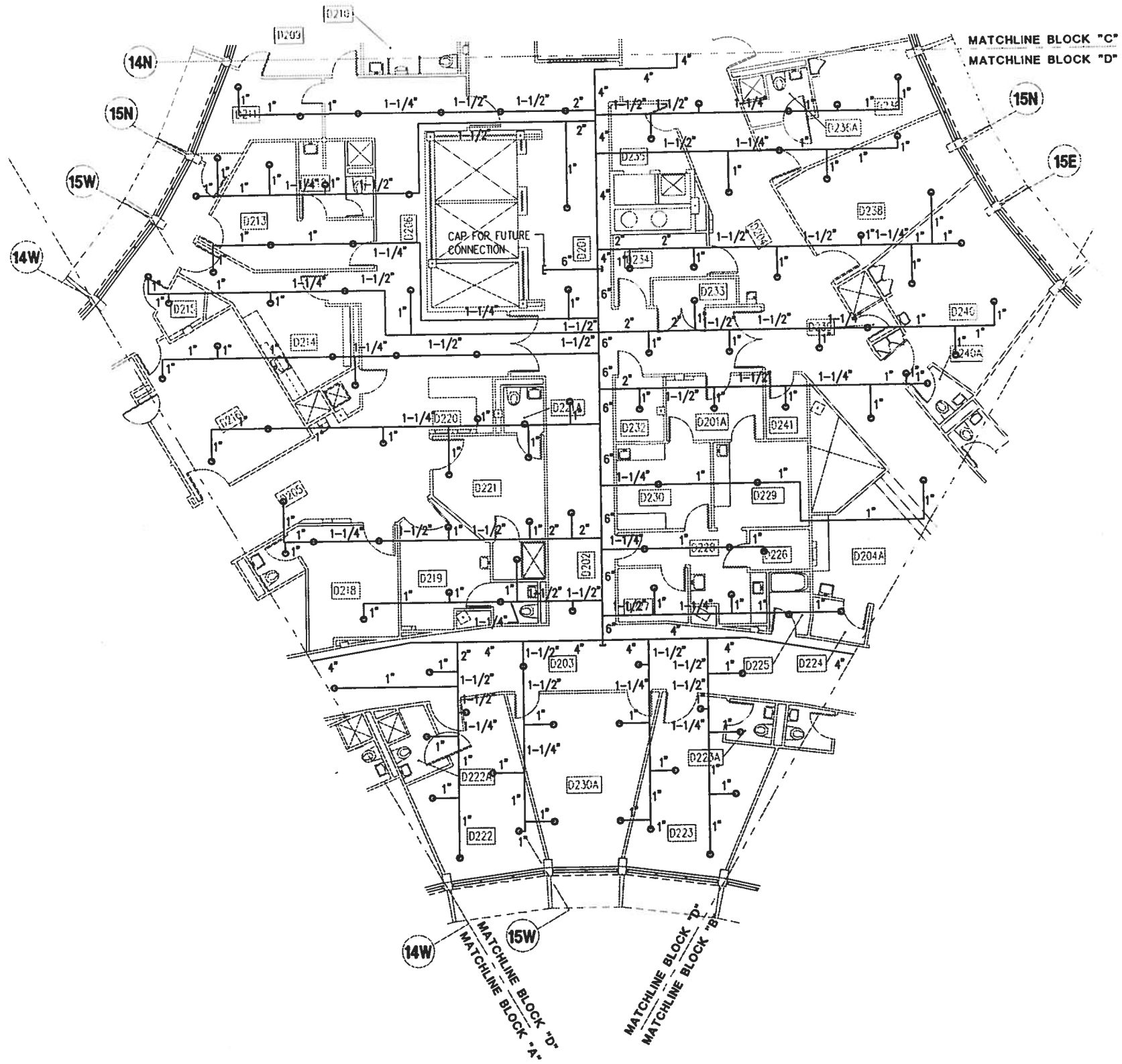

FIRE PROTECTION SECOND FLOOR PLAN BLOCK "D"

SCALE: 1/8" = 1'-0"

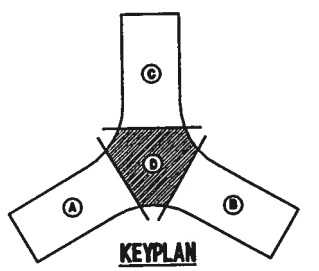

KEYPLAN

0 5 10 15 20

GRAPHIC SCALE
1/8"=1'-0"

P:\95-113\ME\113M0203.dwg, (48|96), 02/27/96 at 10:02:07 by JOINER_J

SHERLOCK, SMITH & ADAMS, INC.
ARCHITECTS - ENGINEERS
MONTGOMERY, ALABAMA

U.S. NAVAL STATION ROOSEVELT ROADS, P.R.
REPAIRS TO NAVAL HOSPITAL
FIRE PROTECTION SECOND FLOOR PLAN BLOCK "D"

CONSTR. CONTR. NO.	SPECIFICATION NO.	NAVFAC DRWG. NO.	TF NO. XXXXX
XXXXX	XXXXX	XXXXX	SHEET ? OF ??

PLATE NO. F

DEPARTMENT OF THE NAVY
NAVAL FACILITIES ENGINEERING COMMAND
NAVY PUBLIC WORKS CENTER, JACKSONVILLE, FL

REVISION DESCRIPTION | DATE | ENG. DIV. DR. | DATE

SEAL AREA

PWC

ELECTRICAL LEGEND

SYMBOLS & ABBREVIATIONS:

AFF MOUNTING HEIGHT ABOVE FINISHED FLOOR OR GRADE TO CENTERLINE

CL CEILING MOUNTED

ER EXISTING EQUIPMENT TO REMAIN, DEMOLISH EXISTING CIRCUIT ONLY AND RECONNECT AS SHOWN ON NEW WORK (EP2-1 TO EP2-11).

GFI GROUND FAULT CIRCUIT INTERRUPTER.

HG HOSPITAL GRADE RECEPTACLE

REC RECEPTACLE(S)

WP RAINTIGHT (NEMA 3R CLASSIFICATION).

SWITCHES:

S FLUSH TYPE, 20A, 120/277V AC ONLY, QUIET TYPE, 1-POLE

S_3 FLUSH TYPE, 20A, 120/277V AC ONLY, QUIET TYPE, 3 WAY

S_4 FLUSH TYPE, 20A, 120/277V AC ONLY, QUIET TYPE, 4 WAY

S_a CONTROLS OUTLET "a" ETC.

S_D SOLID STATE DIMMER, INCANDESCENT OR FLUORESCENT AS REQUIRED FOR LIGHTS PROVIDED. WATTAGE TO BE MINIMUM OF 125% OF TOTAL FIXTURE WATTAGE CONTROLLED OR AS INDICATED ON DRAWING.

ESSENTIAL ELECTRICAL SYSTEM DESIGNATIONS:

L LIFE SAFETY BRANCH

C CRITICAL BRANCH

O EQUIPMENT BRANCH

NORMAL SYSTEM

BRANCH CIRCUITS:

CONCEALED IN OR BELOW FLOORS.

EXPOSED CONDUIT.

FLEXIBLE CONDUIT TO EQUIPMENT

CONCEALED OVERHEAD OR IN WALLS.

NOTE: CIRCUITS SHOWN L2A:3 INDICATES 1 #12 PHASE CONDUCTOR, 1 #12 NEUTRAL & 1 #12 GND - 1/2" C. TO 20 AMP, 1 POLE BREAKER ON CIRCUIT No. 3, IN PANEL "L2A"., L2A:2,4 INIDICATES 2 # 12 PHASE CONDUCTORS, 1 #10 NEUTRAL & 1 #12 GND - 1/2 C. TO 20 AMP, 1 POLE BREAKER ON CIRCUIT No.'s 2 & 4 IN PANEL "L2A". L2A:2,4,6 INDICATES 3 #12 PHASE CONDUCTORS, 1 #10 NEUTRAL & 1 #12 GND - 3/4" C, TO 20 AMP 1 POLE BREAKERS ON CIRCUIT No.'S 2,4,6, IN PANEL "L2A" ETC. PER NEC OR AS INDICATED. 10s INDICATES ALL CONDUCTORS ARE TO BE MINIMUM #10 GAUGE. CONDUIT PER NEC OR AS INDICATED. 3-30A/2P INDICATES CONNECTED TO THREE(3) 30 AMP 2 POLE BREAKERS ("2-40A/1P" INDICATES TWO 40 AMP, 1 POLE BREAKERS, ETC.) ON LIGHTING PLANS A #12 NEUTRAL MAY BE UTILIZED RATHER THAN A #10 NEUTRAL. TO 20 AMP 1 POLE BREAKERS ON CIRCUIT No.'S 2,4,6, IN PANEL "L2A" ETC.

F4A:3 CIRCUIT THAT IS SHOWN AND SIZE ON SINGLE LINE DIAGRAM SHOWN AS PANEL "F4A" CIRCUIT No.3.

POWER, PANELS & POWER EQUIPMENT

PANELBOARD - SURFACE MOUNTED - SEE PANELBOARD SCHEDULE

PANELBOARD - RECESSED - SEE PANELBOARD SCHEDULE

DISTRIBUTION PANELBOARD OR SWITCHBOARD - SEE PANEL SCHEDULE

DISCONNECT SWITCH, NON-FUSIBLE, SIZE AND TYPE AS NOTED OR AS SHOWN ON SCHEDULE ON PLATE

DISCONNECT SWITCH, FUSIBLE, SIZE, TYPE AND FUSED AS NOTED, FUSE PER MANUFACTURER'S RECOMMENDATION. NON-FUSED SWITCH MAY BE USED IF UNIT IS UL TESTED WITH BREAKER PROTECTION. SIZE, TYPE AND FUSES AS NOTED OR AS SHOWN ON SCHEDULE ON PLATE.

POWER, PANELS & POWER EQUIPMENT (CONTINUED)

MOLDED CASE CIRCUIT BREAKER

M MAGNETIC TRIP ONLY CIRCUIT BREAKER.

MOLDED CASE CIRCUIT BREAKER WITH SOLID STATE TRIP

DRAWOUT AIR CIRCUIT BREAKER

T TRANSFORMER - DRY TYPE - RATING AS SHOWN. TRANSFORMERS ARE FLOOR MOUNTED UNLESS NOTED OTHERWISE.

B CIRCUIT BREAKER IN NEMA 1 ENCLOSURE - SURFACE MOUNTED

B_F CIRCUIT BREAKER IN NEMA 1 ENCLOSURE - FLUSH MOUNTED.

MISCELLANEOUS EQUIPMENT:

C ELECTRIC CLOCK, TYPE AS SHOWN

J E ELAPSED TIME CLOCK AND CONTROLLER

BRACKET TYPE FIXTURE

EXIT LIGHT

S_F PASSIVE INFRARED OCCUPANCY SENSOR - WALL MOUNTED IN EXISTING LOCATION FOR LIGHT SWITCH.

S_C ULTRASONIC OCCUPANCY SENSOR - CEILING MOUNTED

S_{C1} PASSIVE INFRARED OCCUPANCY SENSOR - CEILING MOUNTED

GROUNDING

GROUND ROD(S).

G GROUND HOMERUN 1#12, 1/2"C.

CEILING OUTLETS:

FS1 8 b SURFACE MOUNTED FIXTURE, SHOWN FIXTURE MARK "FS1", CIRCUIT No. 8, CONTROLLED BY SWITCH "b" TYPICAL. WHERE 2 SUBSCRIPT LETTERS ARE SHOWN BY FIXTURE SUCH AS "a" & "b" THE INBOARD LAMPS SHALL BE CONTROLLED BY SWITCH "a" AND THE OUTBOARD LAMPS BY SWITCH "b".

LIGHTING FIXTURE - MOUNTING AND TYPE AS SHOWN IN FIXTURE SCHEDULE.

EXIT LIGHT - NUMBER AND DIRECTION OF FACES AS SHOWN BY COLORED IN SECTION. SHOWN SINGLE FACE. PROVIDE ARROWS AS INDICATED ON ELECTRICAL PLANS OR FIRE PROTECTION PLANS.

LIGHTING FIXTURE ON EMERGENCY POWER

LIGHTING FIXTURE ON EMERGENCY POWER AND WITH BATTERY PACK.

WALL RECEPTACLES:

SINGLE RECEPTACLE - 20A, MTD. 18" AFF UNLESS OTHERWISE NOTED.

DUPLEX RECEPTACLE, HG, 20A, 125V., 2P-3 WIRE, MOUNT 1'-6" AFF, UNLESS NOTED OTHERWISE NEMA 5-20R.

DUPLEX RECEPTACLE, HG, 20A, 125V, 2P-3 WIRE, MOUNT BOTTOM OF RECEPTACLE COVER PLATE 2" ABOVE COUNTER OR BACKSPLASH. IF NO COUNTER THEN MOUNT 3'-8" AFF, NEMA 5-20R.

DOUBLE DUPLEX RECEPTACLE, HG, 20A, 125V, 2P-3 WIRE, MOUNT BOTTOM OF RECEPTACLE COVER PLATE 2" ABOVE COUNTER OR BACKSPLASH. IF NO COUNTER THEN MOUNT 3'-8" AFF, NEMA 5-20R.

5-30R SPECIAL RECEPTACLE - NEMA CONFIGURATION AS SHOWN ON FLOOR PLANS OR IN EQUIPMENT SCHEDULE - SHOWN NEMA 5-30R.

GFI DUPLEX RECEPTACLE, HG, 20A, 125V, 2P-3 WIRE, WITH GROUND FAULT INTERRUPTING.

CW DUPLEX RECEPTACLE, HG, MOUNTED IN CASEWORK

TV DUPLEX RECEPTACLE, HG, MOUNTED IN CEILING

JUNCTION BOXES:

J IN OR ABOVE CEILING

J IN WALL - MOUNT 1'-6" UNLESS NOTED OTHERWISE.

J WITH FLEXIBLE CONNECTION TO EQUIPMENT

J WP CAST BOX WITH WEATHERPROOF COVER

8 J BL IN CEILING FOR EXAM LIGHTS ON THE CRITICAL BRANCH. NUMBER INDICATES CIRCUIT (277 VOLT.)

CONTROLS & MECHANICAL EQUIPMENT:

MOTOR CONTROLLER - MAGNETIC - MOUNTS IN MOTOR CONTROL CENTER

MOTOR CONTROLLER - MAGNETIC - MOUNTS IN SEPARATE ENCLOSURE FURNISHED BY MECHANICAL, INSTALLED BY ELECTRICAL - COORDINATE LOCATION WITH MECHANICAL. REPLACEMENT STARTERS FOR CONVERSION TO 480 VOLT FURNISHED BY ELECTRICAL.

V COMBINATION VARIABLE SPEED MOTOR CONTROLLER AND DISCONNECT

S_M MOTOR SNAP SWITCH WITH THERMAL OVERLOAD PROTECTION. 20A, 1 POLE UNLESS NOTED OTHERWISE.

M MOTOR - ELECTRICAL CHARACTERISTICS AS NOTED.

COMBINATION STARTER - MOUNTS IN SEPERATE ENCLOSURE - MAGNETIC STARTER, OVERLOAD RELAY, NON-FUSED DISCONNECT. 50VA CONTROL TRANSFORMER, 1A/1B CONTACTS.

COMMUNICATIONS SYSTEM:

CEILING OUTLETS

S PAGING SYSTEM, CEILING SPEAKER

NURSE CALL SYSTEM DOME LIGHT.

FATC FIRE ALARM CONTROL PANEL

FIRE ALARM SYSTEM: SMOKE DETECTOR

F P FIRE ALARM SYSTEM: MANUAL PULL STATION

F FIRE ALARM SYSTEM: STROBE LIGHT, MOUNTED AT 6'-8"(80") AFF.

F FIRE ALARM SYSTEM: HORN/STROBE LIGHT, MOUNTED AT 6'-8"(80") AFF.

FIRE ALARM SYSTEM: SMOKE DETECTOR, DUCT-MOUNTED.

SEE SHEET EP6-1 FOR POWER SINGLE LINE DIAGRAM LEGEND.

SHERLOCK, SMITH & ADAMS, INC.
ARCHITECTS - ENGINEERS
MONTGOMERY, ALABAMA

U.S. NAVAL STATION ROOSEVELT ROADS, P.R.
REPAIRS TO NAVAL HOSPITAL
ELECTRICAL LEGEND

CONSTR. CONTR. NO.	SPECIFICATION NO.	NAVFAC DRWG. NO.	TF NO. XXXXX
XXXXX	XXXXX	XXXXX	SHEET ? OF ??

DEPARTMENT OF THE NAVY
NAVAL FACILITIES ENGINEERING COMMAND
NAVY PUBLIC WORKS CENTER, JACKSONVILLE, FL

PLATE NO.

REVISION DESCRIPTION | DWG. DR. | DATE | DATE

SEAL AREA

PWC

GENERAL NOTES

1. FOR SITE WORK LEGEND SEE SHEET ES1-1, FOR POWER SINGLE LINE LEGEND SEE SHEET EP6-1.

2. PHASING SHALL BE COORDINATED AND IN COMPLIANCE WITH ALL PHASING DRAWINGS AND NOTES. COORDINATE ALL POWER OUTAGES WITH OWNER AND PROVIDE A WRITTEN NOTICE TO OWNER NOT LESS THAN 30 DAYS IN ADVANCE.

3. MOTOR CONTROL DEVICES FURNISHED IN PLACE BY MECHANICAL TRADE, BUT ELECTRICALLY CONNECTED BY ELECTRICAL TRADE.

4. FLEXIBLE CONDUIT INSTALLED OUT-OF-DOORS, IN ANY MECHANICAL EQUIPMENT ROOM, OR IN NORMALLY WET AREAS, SHALL BE LIQUID TIGHT FLEX WITH SUITABLE FITTINGS.

5. COORDINATE WITH ALL MECHANICAL TRADES FOR SPACE REQUIREMENTS IN MECHANICAL ROOMS, CORRIDORS, SHAFTS, ABOVE CEILING, ETC. THIS INCLUDES SPACE ABOVE PANELS WHERE DUCTS AND PIPING ARE PROHIBITED.

6. FOR EXACT LOCATIONS OF MECHANICAL EQUIPMENT, SEE MECHANICAL PLANS.

7. WHERE WALL SWITCHES AND CONTROL DEVICES SUCH AS THERMOSTATS ARE SHOWN NEAR EACH OTHER (CONTROL DEVICES SUCH AS THERMOSTATS ARE SHOWN ON THE MECHANICAL DRAWINGS) THEY SHALL BE MOUNTED WITH THE CONTROL DEVICE DIRECTLY BESIDE THE SWITCH.

8. THE LOCATION OF FIXTURES IN MECH., ELEC., MACHINE ROOMS, ETC. ARE SHOWN FOR BID PURPOSES ONLY. FIXTURES SHALL BE INSTALLED SO AS TO COORDINATE WITH ALL TRADES AND SHALL BE ARRANGED FOR MAXIMUM LIGHTING DISTRIBUTION OF THE AREA.

9. PROVIDE CONDUIT EXPANSION FITTINGS WITH BONDING JUMPERS FOR ALL CONDUITS PASSING THROUGH EXPANSION JOINTS. SEE ARCHITECTURAL DRAWINGS FOR EXPANSION JOINT LOCATIONS.

10. SEE ARCHITECTURAL REFLECTED CEILING PLANS FOR EXACT LOCATION OF ALL CEILING MOUNTED EQUIPMENT.

11. ALL CEILING AND WALL MOUNTED EQUIPMENT OR DEVICES SHALL BE LOCATED TO AVOID DOOR SWINGS WHERE REQUIRED.

12. CONTRACTOR SHALL VERIFY & COORDINATE ALL MOUNTING HEIGHTS OF ALL DEVICES MOUNTED IN CASEWORK OR IN OR ABOVE COUNTERS WITH SPECIFIC EQUIPMENT FURNISHED.

13. OUTLET BOXES(RECEPTACLES, LIGHT SWITCHES, TELEPHONES, ETC.) OVER 16 SQUARE INCHES IN SMOKE AND FIRE WALLS MUST BE 5 SIDED WITH SAME CONSTRUCTION AS WALL SYSTEM. WHERE OUTLET BOXES ARE ON OPPOSITE SIDES OF A FIRE WALL THERE MUST BE A 24 INCH HORIZONTAL SEPARATION BETWEEN THEM. IF OUTLET BOXES ON PLANS ARE SHOWN AT EXISTING LOCATIONS IN FIRE WALLS BUT THERE IS LESS THAN 24 INCHES OF SEPARATION THE CONTRACTOR SHALL RELOCATE ONE OR BOTH OUTLETS TO ACHIEVE THE MINIMUM 24 INCHES OF SEPARATION REQUIRED.

14. DO NOT MOUNT OUTLETS BACK TO BACK. THEY MUST BE IN SEPARATE STUD SPACES.

15. CONDUIT TO PASS THROUGH WALLS AT 90 DEGREES AND TO BE RUN PARALLEL OR PERPENDICULAR TO WALLS.

16. BRANCH CIRCUITS AND HOMERUNS SHALL BE # 12 WIRE AND 1/2"CONDUIT MINIMUM. EVERY CONDUIT SHALL HAVE A GROUND WIRE (#12 MINIMUM).

17. NO MORE THAN 3 PHASE CONDUCTORS MAY BE INSTALLED IN ONE CONDUIT UNLESS NOTED OTHERWISE.

18. ALL NORMAL RECEPTACLES, SWITCHES, ETC. TO BE IVORY WITH STAINLESS STEEL PLATES UNLESS NOTED OTHERWISE. ALL RECEPTACLES AND LIGHT SWITCHES ON EMERGENCY POWER SHALL BE RED. ENGRAVE EMERGENCY PLATES WITH "EMERGENCY", FILLED WITH RED LETTERS. IN CRITICAL CARE AREAS ALSO ENGRAVE EMERGENCY PLATES WITH CIRCUIT NUMBER.

19. PROVIDE BARRIERS BETWEEN ALL 277V SWITCHES MOUNTED UNDER THE SAME COVER PLATE WITH OTHER 277V SWITCHES ON DIFFERENT PHASES OR 120V SWITCHES.

20. MOUNTING HEIGHTS OF WALL OUTLETS ABOVE FINISHED FLOOR SHALL BE AS INDICATED IN THE LEGEND AND IN THE FOLLOWING TABLE UNLESS NOTED OTHERWISE ON THE PLANS (MOUNTING HEIGHTS ARE TO CENTERLINE OF DEVICE):

SWITCHES (GENERAL)	4'- 0"
RECEPTACLES (GENERAL)	1'- 6"
BATH BRACKETS	7'- 0"
STAIR BRACKETS (ABOVE LANDING)	7'- 0"
TELEPHONE OUTLETS	1'- 6"

FOR SPECIAL MOUNTING HEIGHTS OF DEVICES IN O.R., DELIVERY, NURSES STATIONS, ETC., SEE ARCHITECTURAL ELEVATIONS.

21. MAINTAIN N.E.C. MINIMUM CLEARANCE IN FRONT OF ALL SAFETY SWITCHES, PANELBOARDS, TRANSFER SWITCHES, TRANSFORMERS, AND OTHER ELECTRICAL EQUIPMENT.

22. PRIOR TO ANY ROUGH-IN CONTRACTOR TO PROVIDE SCALED DRAWINGS (WITH ACTUAL DIMENSIONS OF APPROVED EQUIPMENT) SHOWING LOCATIONS AND PROPER CLEARANCES OF ALL ELECTRICAL PANELS, TRANSFORMERS, COMMUNICATION CABINETS, AUTOMATIC TRANSFER SWITCHES, ENGINE GENERATOR SETS, EXHAUST PIPING, DAY TANKS, ETC. FOR APPROVAL. DRAWINGS WILL SHOW MECHANICAL, PLUMBING AND ARCHITECTURAL AS WELL AS ELECTRICAL EQUIPMENT. PROVIDE SCALED PLAN VIEW AND ELEVATION OF COMPLETE GENERATOR EXHAUST SYSTEM FOR APPROVAL.

23. PRIOR TO ROUGH-IN CONTRACTOR TO PROVIDE SCALED WALL ELEVATIONS WHERE ALL ALARM, SIGNAL CABINETS, ETC ARE INSTALLED IN OTHER THAN MECHANICAL & ELECTRICAL CLOSETS FOR APPROVAL.

24. NO CONDUIT SHALL PASS THROUGH ELEVATOR HOISTWAY OR ELEVATOR MACHINE ROOM UNLESS IT SPECIFICALLY SERVES EQUIPMENT IN THAT ROOM.

25. ALL UNDERGROUND CONDUIT RUNS ENTERING THE BUILDING SHALL BE SEALED TO PREVENT THE ENTRANCE OF MOISTURE AND GASES.

26. UNLESS NOTED OTHERWISE ALL MOTORS 1/2 HP AND LARGER SHALL BE 460V, 3 PHASE AND MOTORS SMALLER THAN 1/2 HP SHALL BE 120V, 1 PHASE.

27. CONDUIT FOR RECEPTACLE CIRCUITS SHALL BE RUN OVERHEAD UNLESS NOTED OTHERWISE.

28. PROVIDE CONDUIT FOR OUTLET BOXES AS REQUIRED FOR THERMOSTATS. THERMOSTATS ARE SHOWN ON MECHANICAL DRAWINGS.

29. CONTRACTOR SHALL VERIFY AND COORDINATE ALL CONNECTIONS TO EQUIPMENT WITH SPECIFIC EQUIPMENT FURNISHED.

30. IN EXISTING BUILDING ALL CONDUIT SHALL BE CONCEALED UNLESS NOTED OTHERWISE.

31. ANY ITEM ABOVE CEILINGS IN EXISTING CORRIDORS OR ROOMS WHICH NEEDS TO BE RELOCATED FOR INSTALLATION OF NEW EQUIPMENT SHALL BE RELOCATED AND RECONNECTED AS REQUIRED. THIS INCLUDES CONDUIT, WIRE, PIPING, DUCTWORK,ETC.

32. ALL ITEMS ON PLANS ARE NEW UNLESS NOTED OTHERWISE.

33. EXISTING PANELS TO REMAIN SHALL HAVE THEIR PANEL SCHEDULES UPDATED AND RETYPED AFTER COMPLETION OF WORK.

34. CONTRACTOR SHALL PROVIDE 1500 FT OF 2-#12, 1-#12 GND., 3/4"C OR THE EQUIVALENT THEREOF FOR MISCELLANEOUS CIRCUITS AS DIRECTED BY THE CONTRACTOR OFFICER. CONTRACTOR SHALL MAINTAIN A LOG OF MATERIAL USED.

35. SHEETS E01-1 THROUGH E01-3 SHOW THE LOCATIONS OF EXISTING PANELS AND NEW ELECTRICAL CLOSETS. THESE SHEETS ALSO INDICATE THE GENERAL ROUTING PATH FOR NEW FEEDERS. EXACT ROUTING OF FEEDERS IS TO BE DETERMINED BY THE CONTRACTOR IN THE FIELD AND CHANGES TO ROUTING SHALL BE AT NO ADDITIONAL COST TO THE GOVERNMENT. ADHERE TO ALL PHASING PLANS. ROUTING OF CIRCUITS FROM MOTOR CONTROL CENTERS ARE THE RESPONSIBILITY OF THE CONTRACTOR AND SHOULD BE CONSIDERED WHEN PROVIDING FEEDER CIRCUITS. THESE SHEETS ARE FOR INFORMATION PURPOSES ONLY.

36. CONTRACTOR SHALL IDENTIFY ANY NEW AND EXISTING ELECTRICAL DEVICE THAT IS MOUNTED ABOVE THE CEILING AND REQUIRES MAINTENANCE BY PLACING A COLORED DOT OR TACK AT THE LOCATION. COORDINATE WITH OTHER TRADES SUCH THAT ALL TRADES USE THE SAME METHOD EXCEPT DIFFERENT COLORS FOR EACH SYSTEM IN EACH TRADE.

37. ALL NEW CIRCUITS TO WALL MOUNTED RECEPTACLES AND JUNCTION BOXES MUST BE FED FROM OVERHEAD. IN MOST CASES THIS WILL REQUIRE CHASING AND PATCHING THE EXISTING WALLS AT EACH DEVICE LOCATION. SEE NOTES 42 AND 44.

38. ALL ELECTRICAL ITEMS PROVIDED OR EXISTING TO REMAIN SHALL BE PROPERLY BRACED FOR SEISMIC ZONE 3.

39. IT IS STRONGLY RECOMMENDED THE CONTRACTOR VISIT THE SITE PRIOR TO BIDDING TO ASCERTAIN EXISTING CONDITIONS AS HE WILL BE RESPONSIBLE FOR EXISTING CONDITIONS AS REQUIRED IN OTHER NOTES.

40. ALL RECEPTACLES BESIDES SINKS SHALL BE LOCATED AT LEAST 6" HORIZONTALLY FROM THE TOWEL DISPENSER. UNDER NO CONDITION SHALL A RECEPTACLE BE LOCATED UNDER A TOWEL DISPENSER.

41. CONTRACTOR SHALL PROVIDE A CONSOLIDATED UTILITY OUTAGE PLAN 30 DAYS AFTER CONTRACT AWARD. PLAN SHALL BE IN A TABULAR FORMAT WITH THE FOLLOWING INFORMATION PROVIDED FOR EACH EVENT:
    A - DATE/DURATION
    B - DESCRIPTION/PURPOSE OF OUTAGE
    C - IMPACTS
    D - REMARKS

42. CONTRACTOR SHALL HAVE THE OPTION OF USING METALLIC ARMORED CABLE TO RUN FROM THE CEILING SPACE DOWN THE WALL TO THE DEVICE IN QUESTION. THE CONTRACTOR CAN USE THE EXISTING CONDUIT IN THE WALL TO PULL NEW CONDUCTORS AS LONG AS THE NEW CONDUCTORS ARE NOT DAMAGED.

43. ALL CONTROL WIRING LESS THAN 120 VOLTS SHALL BE FURNISHED UNDER DIVISION 15 SPECIFICATIONS, UNLESS NOTED OTHERWISE.

43. FOR EXISTING AND NEW FINISHES SEE SHEET A3-1 THRU A3-4. FOR EXISTING WALL TYPES SEE NOTE 4 ON A1-1.

GENERAL DEMOLITION NOTES

1. ALL ITEMS SHOWN ON DEMOLITION PLANS ARE TO BE REMOVED UNLESS NOTED OTHERWISE. REMOVE ALL ELECTRICAL ITEMS ASSOCIATED WITH ITEMS SHOWN TO BE REMOVED ON DEMOLITION PLANS. THIS SHALL INCLUDE BUT NOT BE LIMITED TO CONDUIT, WIRE, DEVICES AND CONDUIT SUPPORTS.

2. THE FOLLOWING REMOVED ELECTRICAL EQUIPMENT SHALL REMAIN THE PROPERTY OF THE GOVERNMENT AND SHALL BE TURNED OVER TO THE OWNER AT A LOCATION DESIGNATED BY THE GOVERNMENT: INDOOR DRY TYPE TRANSFORMERS, 800KW EMERGENCY GENERATOR, AND 1200A TRANSFER SWITCH WITH BYPASS OPTION. CARE SHALL BE TAKEN NOT TO DAMAGE REMOVED EQUIPMENT. THE REMOVED EQUIPMENT MUST BE STACKED NEATLY INSIDE OR OUTSIDE THE DESIGNATED STORAGE AREA AS DIRECTED BY THE ROICC. EQUIPMENT NOT DESIRED BY THE GOVERNMENT SHALL BE DISPOSED OF OFF SITE BY THE CONTRACTOR AT NO ADDITIONAL COST. WIRE AND CONDUIT CONDUIT SHALL BECOME THE PROPERTY OF THE CONTRACTOR AND SHALL BE DISPOSED OF OFF SITE.

4. ABANDONED CONDUIT SHALL BE REMOVED WHERE POSSIBLE. ABANDONED CONDUIT WHICH CAN NOT BE REMOVED SHALL HAVE WIRES PULLED FROM THEM AND PLUGGED. WHERE EXISTING CONDUITS ARE REUSED THE OLD WIRES SHALL BE REMOVED, THE CONDUIT SWABBED OUT, AND NEW WIRES REPULLED.

5. IF ANY EXISTING ELECTRICAL EQUIPMENT THAT IS TO REMAIN IN OPERATION BECOMES ISOLATED BECAUSE OF PHASING OR BY THE REMOVAL OF WALLS, CEILINGS, ELECTRICAL EQUIPMENT, ETC., IT SHALL BE THE CONTRACTOR'S RESPONSIBILITY TO REROUTE AND/OR RECONNECT THE EQUIPMENT SO THAT THE SYSTEM REMAINS OPERABLE AS SOON AS POSSIBLE. THIS SHALL ALSO APPLY TO SWITCHING OF LIGHTS AS NEEDED TO KEEP THE FACILITY FUNCTIONAL.

6. ANY MOTORS, HVA/C DEVICES OR OTHER EQUIPMENT WHICH IS TO BE REMOVED SHALL ALSO HAVE ELECTRICAL CONNECTION REMOVED.

7. IT SHALL BE THE ELECTRICAL CONTRACTOR'S RESPONSIBILITY TO RELOCATE AND RECONNECT EXISTING ELECTRICAL CIRCUITS AS REQUIRED TO AVOID NEW CONSTRUCTION.

8. FOR ANY CUTTING OR PATCHING OF WALLS AND CEILING REQUIRED, THIS CONTRACTOR SHALL BE RESPONSIBLE FOR SAME, HOWEVER WORK SHALL BE PERFORMED BY CRAFTSMAN SKILLED IN THAT TRADE.

9. ANY ITEMS ABOVE CEILING IN EXISTING CORRIDORS OR ROOMS WHICH NEEDS TO BE RELOCATED FOR INSTALLATION OF NEW ELECTRICAL EQUIPMENT SHALL BE RELOCATED AND RECONNECTED AS REQUIRED. THIS INCLUDES BUT IS NOT LIMITED TO CONDUIT, WIRE, PIPING, AND DUCTWORK.

10. BEFORE DEMOLISHING ANY CONDUIT OR WIRE THE CONTRACTOR SHALL VERIFY WHAT IT SERVES TO ENSURE SERVICE IS NOT LOST TO ITEMS OUTSIDE OF THE AREA SCHEDULED IN THE PHASING PLAN.

11. WHERE EXISTING ELECTRICAL PANELS IN WALLS OR CEILINGS ARE NOT REUSED THEY SHALL BE REMOVED AND THE WALL OR CEILING PATCHED. BLANKING PLATES WILL NOT BE ACCEPTABLE.

12. EXISTING CONDUITS WHICH PENETRATE EXTERIOR WALLS SHALL BE REMOVED AND EXTERIOR WALL PATCHED, OR CONDUIT SHALL BE SEALED ON INTERIOR OF BUILDING TO PREVENT WATER FROM ENTERING BUILDING.

13. FOR DEMOLITION POWER FLOOR PLANS SEE SHEETS ED2-1 THROUGH ED2-11. FOR DEMOLITION POWER SINGLE LINE DIAGRAM SEE SHEET EP6-3 AND EP6-4.

14. CONTRACTOR SHALL BE RESPONSIBLE FOR REMOVAL, STORAGE AND DISPOSAL OF PCB BALLAST AND FLUORESCENT LAMPS FROM ALL LIGHTING FIXTURES. SEE SPECIFICATION SECTION 13284 FOR DETAILS.

15. CONTRACTOR SHALL NOTIFY THE FACILITY MANAGER IF HE FINDS EXISTING COMMUNICATION CABLE THAT IS IN THE WAY OF CONSTRUCTION. A 2 DAY NOTIFICATION IS REQUIRED.

16. GOVERNMENT SHALL BE RESPONSIBLE FOR COMMUNICATION CABLING AND CONDUIT ABOVE EXISTING CEILINGS WHICH NEEDS TO BE RELOCATED OR SUPPORTED TO REMAIN IN SERVICE DUE TO DEMOLITION OF EXISTING CEILINGS. ELECTRICAL ITEMS SUCH AS EXISTING COMMUNICATIONS CABLE LAYING ON EXISTING CEILINGS SHALL BE INDEPENDENTLY SUPPORTED BY THE GOVERNMENT WHILE THE EXISTING CEILING ARE BEING DEMOLISHED AND REPLACED. SUPPORT SHALL KEEP COMMUNICATION CABLES AND OTHER ITEMS 12" ABOVE CEILING TO ALLOW FOR PROPER SPACE TO INSTALL NEW CEILINGS. THIS INCLUDES BUT IS NOT LIMITED TO CONDUIT AND WIRE FOR NURSE CALL, FIRE ALARM, PAGING, COMPUTER SYSTEMS AND SECURITY.

SEAL AREA

ENG. DIV. DIR.: DATE

DATE REVISION DESCRIPTION

DEPARTMENT OF THE NAVY
NAVAL FACILITIES ENGINEERING COMMAND
NAVY PUBLIC WORKS CENTER, JACKSONVILLE, FL

SHERLOCK, SMITH & ADAMS, INC.
ARCHITECTS - ENGINEERS
MONTGOMERY, ALABAMA

U.S. NAVAL STATION ROOSEVELT ROADS, P.R.
REPAIRS TO NAVAL HOSPITAL
GENERAL NOTES AND DEMOLITION NOTES

CONSTR. CONTR. NO.	SPECIFICATION NO.	NAVFAC DRWG. NO.	TF NO. XXXXX
XXXXX	XXXXX	XXXXX	SHEET ? OF ??

PLATE NO.

PWC

11/9/91

FEEDER SCHEDULE (ALL CONDUCTORS ARE TO BE COPPER)

FEEDER SIZE INDICATOR	NOMINAL AMPACITY (FEEDER)	SYMBOL "⬡" DRY & WET LOCATIONS — CONDUCTORS	RACEWAY	SYMBOL "⬡NN" (NO NEUTRAL) DRY & WET LOCATIONS (NO NEUTRAL) — CONDUCTORS	RACEWAY
1	20	4 #12 & 1 #12 (GND.)	3/4"	3 #12 & 1 #12 (GND.)	3/4"
2	30	4 #10 & 1 #10 (GND.)	3/4"	3 #10 & 1 #10 (GND.)	3/4"
3	40	4 #8 & 1 #10 (GND.)	1"	3 #8 & 1 #10 (GND.)	1"
4	50	4 #6 & 1 #10 (GND.)	1 1/4"	3 #6 & 1 #10 (GND.)	1"
5	60	4 #6 & 1 #10 (GND.)	1 1/4"	3 #6 & 1 #10 (GND.)	1"
6	70	4 #4 & 1 #8 (GND.)	1 1/4"	3 #4 & 1 #8 (GND.)	1 1/4"
7	80	4 #3 & 1 #8 (GND.)	1 1/2"	3 #3 & 1 #8 (GND.)	1 1/4"
8	90	4 #3 & 1 #8 (GND.)	1 1/2"	3 #3 & 1 #8 (GND.)	1 1/4"
9	100	4 #2 & 1 #8 (GND.)	1 1/2"	3 #2 & 1 #8 (GND.)	1 1/4"
10	125	4 #1 & 1 #6 (GND.)	2"	3 #1 & 1 #6 (GND.)	1 1/2"
11	150	4 #1/0 & 1 #6 (GND.)	2"	3 #1/0 & 1 #6 (GND.)	2"
12	175	4 #2/0 & 1 #6 (GND.)	2"	3 #2/0 & 1 #6 (GND.)	2"
13	200	4 #3/0 & 1 #6 (GND.)	2 1/2"	3 #3/0 & 1 #6 (GND.)	2"
14	225	4 #4/0 & 1 #4 (GND.)	2 1/2"	3 #4/0 & 1 #4 (GND.)	2 1/2"
15	250	4-250 KCMIL & 1 #4 (GND.)	3"	3-250 KCMIL & 1 #4 (GND.)	2 1/2"
16	300	4-350 KCMIL & 1 #4 (GND.)	3"	3-350 KCMIL & 1 #4 (GND.)	3"
17	350	4-400 KCMIL & 1 #3 (GND.)	3 1/2"	3-400 KCMIL & 1 #3 (GND.)	3"
18	400	4-500 KCMIL & 1 #3 (GND.)	3 1/2"	3-500 KCMIL & 1 #3 (GND.)	3 1/2"
19	500	2 PARALLEL CIRCUITS EACH 4-250 KCMIL & 1 #2 (GND.)	2-3"	2 PARALLEL CIRCUITS EACH 3-250 KCMIL & 1 #2 (GND.)	2-2 1/2"
20	600	2 PARALLEL CIRCUITS EACH 4-350 KCMIL & 1 #1/0 (GND.)	2-3"	2 PARALLEL CIRCUITS EACH 3-350 KCMIL & 1 #1/0 (GND.)	2-3"
21	800	3 PARALLEL CIRCUITS EACH 4-300 KCMIL & 1 # 1/0 (GND.)	3-3"	3 PARALLEL CIRCUITS EACH 3-300 KCMIL & 1 # 1/0 (GND.)	3-3"
22	1000	3 PARALLEL CIRCUITS EACH 4-400 KCMIL & 1 #3/0 (GND.)	3-3 1/2"	3 PARALLEL CIRCUITS EACH 3-400 KCMIL & 1 #3/0 (GND.)	3-3"
23	1200	4 PARALLEL CIRCUITS EACH 4-350 KCMIL & 1 #3/0 (GND.)	4-3"	4 PARALLEL CIRCUITS EACH 3-350 KCMIL & 1 #3/0 (GND.)	4-3"
24	1400	4 PARALLEL CIRCUITS EACH 4-400 KCMIL & 1 #4/0 (GND.)	4-3 1/2"	4 PARALLEL CIRCUITS EACH 3-400 KCMIL & 1 #4/0 (GND.)	4-3"
25	1600	5 PARALLEL CIRCUITS EACH 4-400 KCMIL & 1 #4/0 (GND.)	5-3 1/2"	5 PARALLEL CIRCUITS EACH 3-400 KCMIL & 1 #4/0 (GND.)	5-3"
26	2000	6 PARALLEL CIRCUITS EACH 4-400 KCMIL & 1 #250 KCMIL (GND.)	6-3 1/2"	6 PARALLEL CIRCUITS EACH 3-400 KCMIL & 1 #250 KCMIL (GND.)	6-3"
27	3000	8 PARALLEL CIRCUITS EACH 4-500 KCMIL & 1 #400 KCMIL (GND.)	8-3 1/2"	8 PARALLEL CIRCUITS EACH 3-500 KCMIL & 1 #400 KCMIL (GND.)	8-3"

SYMBOL "⬡2N" (OVERSIZED NEUTRAL) DRY LOCATIONS (OVERSIZED NEUTRAL) — CONDUCTORS	RACEWAY	WET LOCATIONS (OVERSIZED NEUTRAL) — CONDUCTORS	RACEWAY	NOMINAL AMPACITY (FEEDER)	FEEDER SIZE INDICATOR
3 #12, 1 #10 NEUTRAL & 1 #12(GND)	3/4"	3 #12, 1 #8 NEUTRAL & 1 #12(GND)	3/4"	20	1
3 #10, 1 #6 NEUTRAL & 1 #10(GND)	1"	3 #8, 1 #4 NEUTRAL & 1 #10(GND)	1"	30	2
3 #8, 1 #4 NEUTRAL & 1 #10(GND)	1"	3 #6 1 #3 NEUTRAL & 1 #10(GND)	1 1/4"	40	3
3 #6, 1 #3 NEUTRAL & 1 #10(GND)	1 1/4"	3 #4, 1 #1 NEUTRAL & 1 #10(GND)	1 1/4"	50	4
3 #6, 1 #2 NEUTRAL & 1 #10(GND)	1 1/4"	3 #4, 1 #1/0 NEUTRAL & 1 #10(GND)	1 1/4"	60	5
3 #4, 1 #1 NEUTRAL & 1 #8(GND)	1 1/4"	3 #3, 1 #1/0 NEUTRAL & 1 #8(GND)	1 1/2"	70	6
3 #3, 1 #1/0 NEUTRAL & 1 #8(GND)	1 1/2"	3 #2, 1 #2/0 NEUTRAL & 1 #8(GND)	1 1/2"	80	7
3 #3, 1 #2/0 NEUTRAL & 1 #8(GND)	1 1/2"	3 #1, 1 #3/0 NEUTRAL & 1 #8(GND)	2"	90	8
3 #2, 1 #3/0 NEUTRAL & 1 #8(GND)	2"	3 #1/0, 1 #4/0 NEUTRAL & 1 #8(GND)	2"	100	9
3 #1, 1 #4/0 NEUTRAL & 1 #6(GND)	2"	3 #1/0, 2 #1/0 NEUTRAL & 1 #6(GND)	2"	125	10
3 #2/0, 1 #300 KCMIL NEUTRAL & 1 #6(GND)	2 1/2"	3 #2/0, 2 #1/0 NEUTRAL & 1 #6(GND)	2 1/2"	150	11
3 #3/0, 1 #400 KCMIL NEUTRAL & 1 #6(GND)	2 1/2"	3 #4/0, 2 #3/0 NEUTRAL & 1 #6(GND)	3"	175	12
3 #4/0, 2 #3/0 NEUTRALS & 1 #6(GND)	3"	3-250 KCMIL, 2 #4/0 NEUTRALS & 1 #6 (GND)	3"	200	13
3-250 KCMIL, 2 #4/0 NEUTRALS & 1 #4 (GND)	3"	3-300 KCMIL, 2 #250 KCMIL NEUTRALS & 1 #4(GND)	3"	225	14
3-300 KCMIL, 2 #4/0 NEUTRALS, & 1 #4 (GND)	3"	3-350 KCMIL, 2-300 KCMIL NEUTRALS & 1 #4(GND)	3 1/2"	250	15
3-400 KCMIL, 2-300 KCMIL NEUTRALS & 1 #4(GND)	3 1/2"	3-500 KCMIL, 2-400 KCMIL NEUTRALS & 1 #4(GND)	4"	300	16
3-500 KCMIL, 2-400 KCMIL NEUTRALS & 1 #3(GND)	4"	2 PARALLEL CIRCUITS EACH 3 #4/0, 2-3/0 NEUTRALS & 1 #3(GND)	2-3"	350	17
2 PARALLEL CIRCUITS EACH 3 #4/0, 2#3/0 NEUTRALS & 1 #3(GND)	2-3"	2 PARALLEL CIRCUITS EACH 3-250 KCMIL, 2 #4/0 NEUTRALS & 1 #3(GND)	2-3"	400	18
2 PARALLEL CIRCUITS EACH 3-300 KCMIL, 2 #4/0 NEUTRALS & 1 #2(GND)	2-3"	2 PARALLEL CIRCUITS EACH 3-350 KCMIL, 2-300 KCMIL NEUTRALS & 1 #2(GND)	2-3 1/2"	500	19
2 PARALLEL CIRCUITS EACH 3-400 KCMIL, 2-300 KCMIL NEUTRALS & 1 #1/0(GND)	2-3 1/2"	2 PARALLEL CIRCUITS EACH 3-500 KCMIL, 2-400 KCMIL NEUTRALS & 1 #1/0(GND)	2-4"	600	20
3 PARALLEL CIRCUITS EACH 3-350 KCMIL, 2-250 KCMIL NEUTRALS & 1 #1/0(GND)	3-3 1/2"	3 PARALLEL CIRCUITS EACH 3-400 KCMIL, 2-350 KCMIL NEUTRALS & 1 #1/0(GND)	3-3 1/2"	800	21
3 PARALLEL CIRCUITS EACH 3-500 KCMIL, 2-400 KCMIL NEUTRALS & 1 #3/0(GND)	3-4"	4 PARALLEL CIRCUITS EACH 3-400 KCMIL, 2-300 KCMIL NEUTRALS & 1 #3/0(GND)	4-3 1/2"	1000	22
4 PARALLEL CIRCUITS EACH 3-400 KCMIL, 2-350 KCMIL NEUTRALS & 1 #3/0(GND)	4-3 1/2"	4 PARALLEL CIRCUITS EACH 3-500 KCMIL, 2-400 KCMIL NEUTRALS & 1 #3/0(GND)	4-4"	1200	23
5 PARALLEL CIRCUITS EACH 3-350 KCMIL, 2-300 KCMIL NEUTRALS & 1 #4/0(GND)	5-3 1/2"	5 PARALLEL CIRCUITS EACH 3-500 KCMIL, 2-350 KCMIL NEUTRALS & 1 #4/0(GND)	5-4"	1400	24
5 PARALLEL CIRCUITS EACH 3-500 KCMIL, 2-350 KCMIL NEUTRALS & 1 #4/0(GND)	5-4"	6 PARALLEL CIRCUITS EACH 3-400 KCMIL, 2-500 KCMIL NEUTRALS & 1 #4/0(GND)	6-4"	1600	25
6 PARALLEL CIRCUITS EACH 3-500 KCMIL, 2-400 KCMIL NEUTRALS & 1-250 KCMIL (GND)	6-4"	6 PARALLEL CIRCUITS EACH 3-400 KCMIL, 2-350 KCMIL NEUTRALS & 1-250 KCMIL (GND)	6-3 1/2"	2000	26
				3000	27

SCHEDULE
THREE PHASE: DRY-TYPE TRANSFORMERS

TRANSFORMER RATING KVA	PRIMARY VOLTS	SECONDARY VOLTS	TAPS % FCAN	TAPS % FCBN	PRI. AMPS	PRI.-BKR. IN 480V. PANEL	SEC. AMPS	SEC.-BKR. IN 208Y/120V. PNL.	PRIMARY FEEDER	SECONDARY FEEDER NORMAL XFMR	SECONDARY FEEDER "K" RATED XFMR	GROUNDING ELECTRODE CONDUCTOR - NOTE 1
6	480	208Y/120	-	2-5	7.2	15A - 3P	16.7	25A - 3P	1NN	2	2 2N	1 #8 GND-3/4"C.
9			2-2 1/2	2-2 1/2	10.8	15A - 3P	25.0	35A - 3P	1NN	3	3 2N	1 #8 GND-3/4"C.
15			2-2 1/2	2-2 1/2	18	30A - 3P	42	50A - 3P	2NN	4	4 2N	1 #8 GND-3/4"C.
30			2-2 1/2	4-2 1/2	36	50A - 3P	83	100A - 3P	4NN	9	9 2N	1 #8 GND-3/4"C.
45			2-2 1/2	4-2 1/2	54	70A - 3P	125	175A - 3P	6NN	12	12 2N	1 #4 GND-3/4"C.
75			2-2 1/2	4-2 1/2	90	125A - 3P	208	250A - 3P	10NN	15	15 2N	1 #2 GND-3/4"C.
112.5			2-2 1/2	4-2 1/2	135	175A - 3P	312	400A - 3P	12NN	18	18 2N	1 #1/0 GND-3/4"C.
150			2-2 1/2	4-2 1/2	180	225A - 3P	417	500A - 3P	14NN	19	19 2N	1 #1/0 GND-3/4"C.
225			2-2 1/2	4-2 1/2	271	350A - 3P	625	800A - 3P	17NN	21	21 2N	1 #2/0 GND-3/4"C.
300			2-2 1/2	4-2 1/2	361	450A - 3P	833	1000A - 3P	19NN	22	22 2N	1 #3/0 GND-3/4"C.

NOTE 1: CONNECT TRANSFORMER NEUTRAL TO COLD WATER PIPE AND TO BUILDING STEEL WITH GROUNDING ELECTRODE CONDUCTOR OF SIZE SHOWN. SEE SHEET EP8-3.

T 30 DRY TYPE TRANSFORMER: ALL DRY TYPE TRANSFORMERS TO HAVE 480V DELTA PRIMARY AND 208Y/120V SECONDARY WITH A K-4 RATING FOR NON-LINEAR LOADS UNLESS NOTED OTHERWISE.

FEEDER SCHEDULE NOTES:

1. CONDUCTORS AMPACITIES ARE BASED ON 60°C INSULATION FOR CONDUCTORS OF #2 GAUGE AND SMALLER AND ARE BASED ON 75°C INSULATION FOR CONDUCTORS OF #1 GAUGE AND LARGER. THIS IS TO CONFORM TO UL'S TESTING OF EQUIPMENT TERMINATIONS. CONDUCTOR SIZES SHALL NOT BE REDUCED FOR HIGHER RATED TEMPERATURE INSULATION USED.
2. CONDUIT SIZES ARE BASED ON "THW" INSULATION AND SHALL NOT BE REDUCED FOR DIFFERENT INSULATION TYPES.
3. SYMBOL "15 2N" INDICATES NEUTRAL HAS BEEN SIZED AT 1.73 TIMES THE AMPACITY OF THE PHASE CONDUCTORS TO COMPENSATE FOR HIGHER CURRENTS ON THE NEUTRAL FROM NON-LINEAR LOADS.

EXAMPLES OF HOW TO USE SCHEDULE ABOVE WITH SINGLE LINE DIAGRAM

FROM	TO	BREAKER SIZE	FEEDER SYMBOL	CONDUCTORS	REMARKS
DES-M2	TS-QA	1000	22	3 PARALLEL CIRCUITS EACH 4-450 KCMIL & 1 #3/0 GND.	OVERSIZED FEEDER SHOWN ON SINGLE LINE
DES-M2	TS-CC	500	19	2 PARALLEL CIRCUITS EACH 4-250 KCMIL & 1 #2 GND.	-
F4N3	TN3A	125	10 2N	3 #1, 1 #4/0 NEUTRAL & 1 #6 GND.	OVERSIZED NEUTRAL BECAUSE 480V NORMAL CIRCUIT. (SAME FOR CRITICAL BRANCH)
F4CC	C42C	200	13	4 #3/0 & 1 #6 GND.	208V BUT NO OVERSIZED NEUTRAL REQUIRED BECAUSE ON EQUIPMENT BRANCH. (SAME FOR LIFE SAFETY BRANCH)

SETTINGS OF INSTANTANEOUS AND SHORT TIME FUNCTIONS IN SWITCHGEAR AND SWITCHBOARD CIRCUIT BREAKERS

CIRCUIT BREAKER LOCATION	SHORT TIME DELAY BAND MAX	INT.	MIN	INSTANTANEOUS
SWITCHGEAR-MAIN	•	—	—	NONE
SWITCHGEAR-FEEDER	—	•	—	FIXED - 15X
SWITCHBOARD-FEEDER	—	—	•	ADJ. TO 10X

LEGEND

L23A PANELBOARD: SHOWN PANEL L23A

KEY TO PANEL DESIGNATIONS:

1. SERVICE:
   L-LIFE SAFETY
   C-CRITICAL
   Q-EQUIPMENT SYSTEM
   N-NORMAL
2. VOLTAGE:
   2-208Y/120VOLTS
   4-480Y/277VOLTS
3. FLOOR:
   GROUND THROUGH 3 AS NOTED.
4. PANEL AREA SERVED ON APPROPRIATE FLOOR: ALPHABETICAL, A, B, C, ETC.
   EXAMPLE: C 2 3 A

CRITICAL BRANCH
208Y/120V
THIRD FLOOR
AREA 'A' SERVED.

SHERLOCK, SMITH & ADAMS, INC.
ARCHITECTS - ENGINEERS
MONTGOMERY, ALABAMA

U.S. NAVAL STATION ROOSEVELT ROADS, P.R.
REPAIRS TO NAVAL HOSPITAL
NEW POWER SINGLE LINE SCHEDULES

CONSTR. CONTR. NO.	SPECIFICATION NO.	NAVFAC DRWG. NO.	TF NO. XXXXX
XXXXX	XXXXX	XXXXX	SHEET ? OF ??

DEPARTMENT OF THE NAVY — NAVAL FACILITIES ENGINEERING COMMAND
NAVY PUBLIC WORKS CENTER, JACKSONVILLE, FL
U.S. NAVAL STATION ROOSEVELT ROADS, P.R.

REVISION DESCRIPTION | DATE

ENG. DIV. DIR.: ____ DATE: ____ SATISFACTORY TO: ____

SEAL AREA

PLATE NO. E(PWC #

LEGEND

NEW ELECTRICAL ROOM

EXISTING ELECTRICAL ROOM

ROUTING OF NEW FEEDERS (FEEDER TO PANEL SDPA SHOWN) — SDP-A

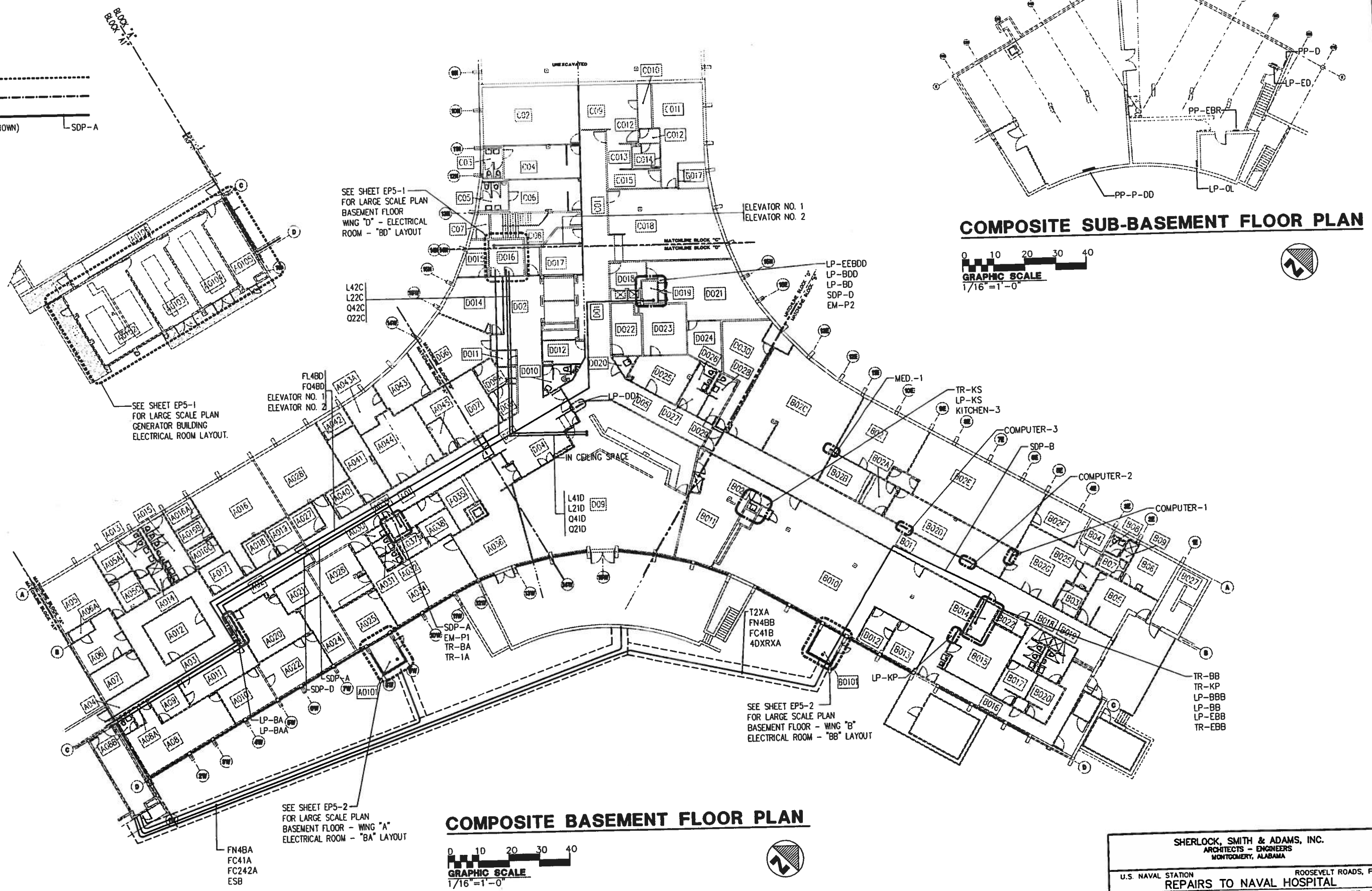

COMPOSITE BASEMENT FLOOR PLAN

0 10 20 30 40
GRAPHIC SCALE
1/16"=1'-0"

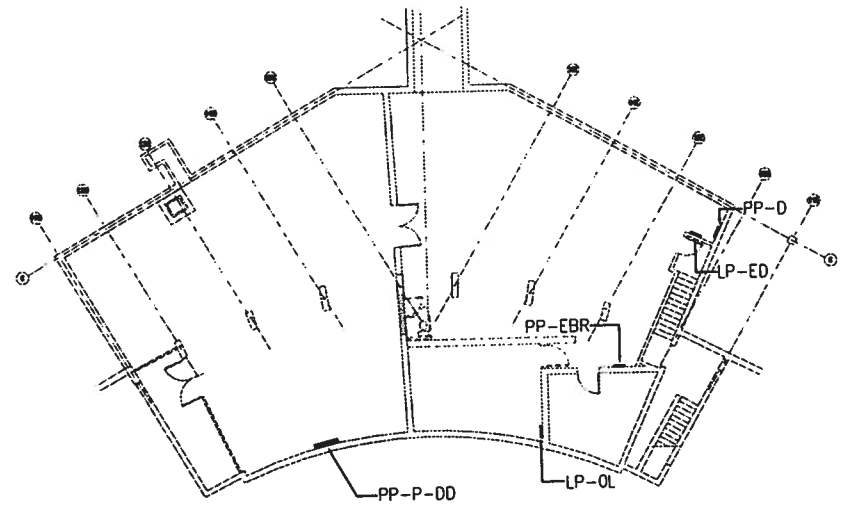

COMPOSITE SUB-BASEMENT FLOOR PLAN

0 10 20 30 40
GRAPHIC SCALE
1/16"=1'-0"

NOTE:

GENERALLY CIRCUITS BETWEEN MCC'S AND MOTORS ARE NOT SHOWN.

SHERLOCK, SMITH & ADAMS, INC.
ARCHITECTS - ENGINEERS
MONTGOMERY, ALABAMA

U.S. NAVAL STATION — ROOSEVELT ROADS, P.R.

REPAIRS TO NAVAL HOSPITAL

SERV. BOUND. & FEEDER ROUT. COMP. SITE PLAN-BASE. FLR.

CONSTR. CONTR. NO.	SPECIFICATION NO.	NAVFAC DRWG. NO.	TF NO. XXXXX
XXXXX	XXXXX	XXXXX	SHEET ? OF ??

PLATE NO.

DEPARTMENT OF THE NAVY
NAVAL FACILITIES ENGINEERING COMMAND
NAVY PUBLIC WORKS CENTER, JACKSONVILLE, FL

REVISION DESCRIPTION | DNG. DIV. DR.: | DATE | DATE

SEAL AREA

PWC

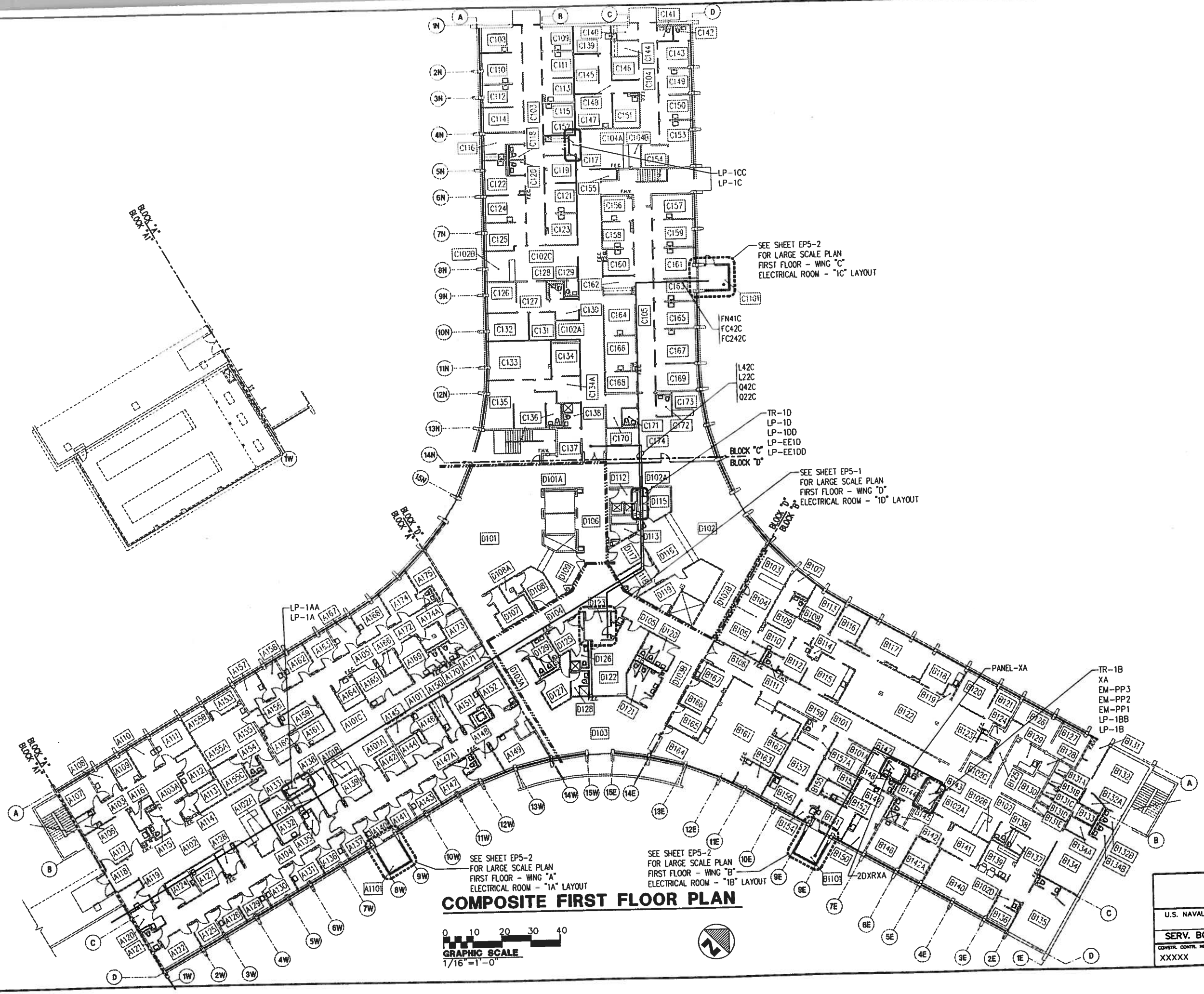

COMPOSITE FIRST FLOOR PLAN

LEGEND

NEW ELECTRICAL ROOM

EXISTING ELECTRICAL ROOM

ROUTING OF NEW FEEDERS (FEEDER TO PANEL SDPA SHOWN) — SDP-A

SHERLOCK, SMITH & ADAMS, INC.
ARCHITECTS - ENGINEERS
MONTGOMERY, ALABAMA

U.S. NAVAL STATION ROOSEVELT ROADS, P.R.

REPAIRS TO NAVAL HOSPITAL

SERV. BOUND. & FEEDER ROUT. COMP. PLAN-FIRST FLR.

CONSTR. CONTR. NO.	SPECIFICATION NO.	NAVFAC DRWG. NO.	TF NO. XXXXX
XXXXX	XXXXX	XXXXX	SHEET ? OF ??

DEPARTMENT OF THE NAVY
NAVAL FACILITIES ENGINEERING COMMAND
NAVY PUBLIC WORKS CENTER, JACKSONVILLE, FL

PLATE NO.

PWC

SEAL AREA

ENG. DIV. DR.: DATE

DATE REVISION DESCRIPTION

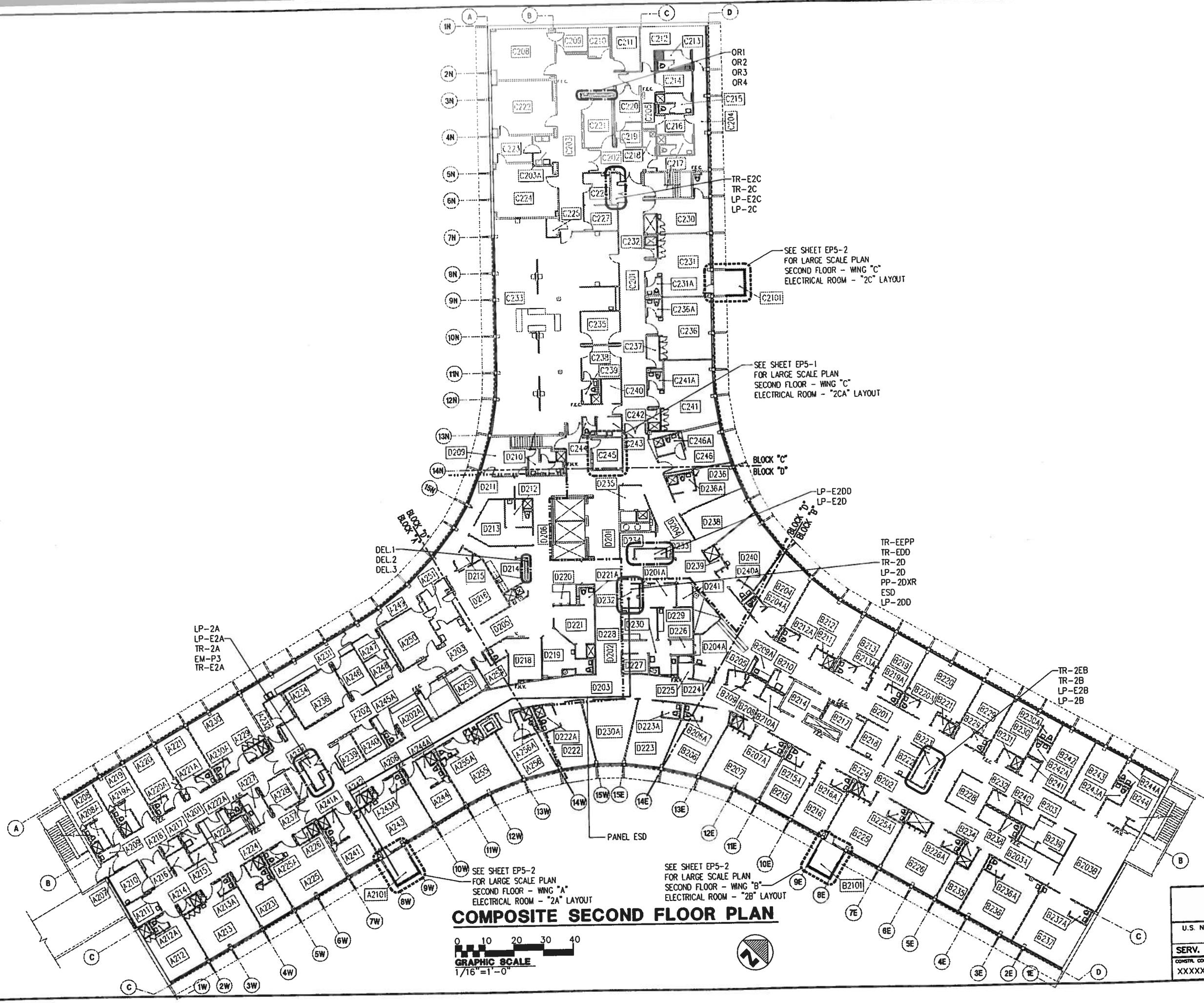

COMPOSITE SECOND FLOOR PLAN

LEGEND

NEW ELECTRICAL ROOM

EXISTING ELECTRICAL ROOM

ROUTING OF NEW FEEDERS
(FEEDER TO PANEL SDPA SHOWN) SDP-A

SHERLOCK, SMITH & ADAMS, INC.
ARCHITECTS - ENGINEERS
MONTGOMERY, ALABAMA

U.S. NAVAL STATION ROOSEVELT ROADS, P.R.

REPAIRS TO NAVAL HOSPITAL

SERV. BOUND. & FEEDER ROUT. COMP. PLAN - SECOND FLR.

CONSTR. CONTR. NO.	SPECIFICATION NO.	NAVFAC DRWG. NO.	TF NO. XXXXX
XXXXX	XXXXX	XXXXX	SHEET ? OF ??

PLATE NO.

DEPARTMENT OF THE NAVY
NAVAL FACILITIES ENGINEERING COMMAND
NAVY PUBLIC WORKS CENTER, JACKSONVILLE, FL

REVISION DESCRIPTION | DATE | DWG. DN. DR. | DATE

SEAL AREA

PWC

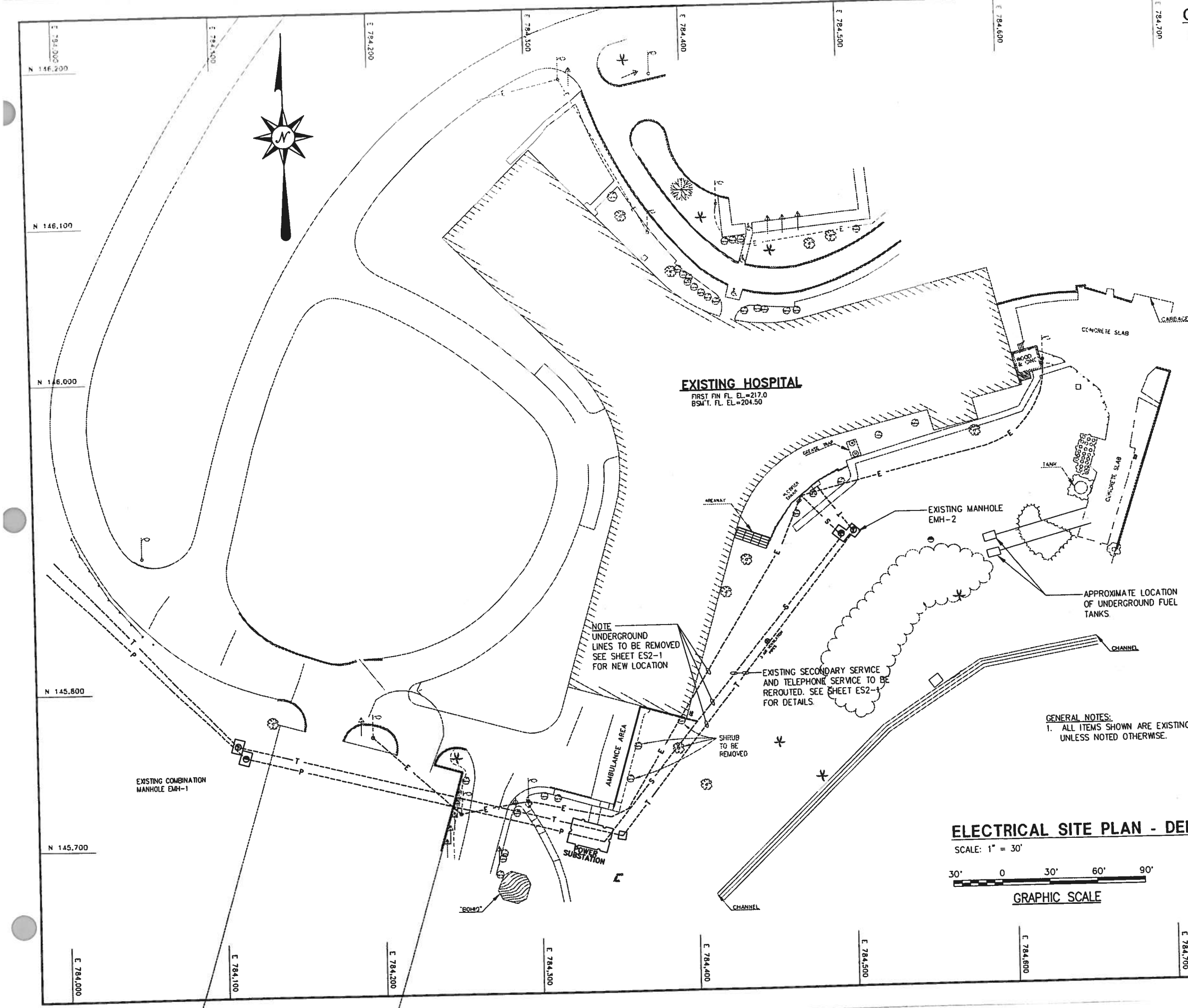

GENERAL NOTES - SITEWORK

1. IN THE EVENT ANY EXISTING ELECTRICAL APPARATUS OR EQUIPMENT IS FOUND LEAKING DIELECTRIC OR OTHER FLUID, WORK SHALL CEASE AND THE CONTRACTING OFFICER SHALL BE CONTACTED IMMEDIATELY.
2. BEFORE ANY SERVICE DISRUPTION, THE CONTRACTOR SHALL CONTACT THE CONTRACTING OFFICER. CONTRACTOR SHALL OBTAIN PERMISSION NOT LESS THAN THIRTY (30) DAYS PRIOR TO DISRUPTION AND SHALL STATE IN WRITING THE PERIOD OF OUTAGE, BUILDINGS OR FEEDERS AFFECTED, AND OTHER PERTINENT INFORMATION AS MAY BE REQUESTED BY THE CONTRACTING OFFICER.
3. CUT AND PATCH ALL EXISTING ROADS, PARKING LOTS, CURBS, ETC., EFFECTED BY THE DEMOLITION AND NEW WORK SUCH AS REMOVING/INSTALLING DUCT BANKS, MAN HOLES, EQUIPMENT PADS, ETC. THIS CUTTING AND PATCHING SHALL BE ACCOMPLISHED BY CRAFTSMEN SPECIALIZED IN THE TRADE.
4. ALL ITEMS ARE NEW UNLESS OTHERWISE NOTED.
5. DURING INSTALLATION OF PRIMARY SERVICE, CONTRACTOR SHALL WRAP CABLE AROUND MANHOLES ONE FULL TURN. THIS ALLOWS SLACK IN PRIMARY SERVICE IN CASE OF A SEISMIC EVENT.
6. FOR ALL EQUIPMENT PAD-MOUNTED USE ELBOW-TYPE TERMINATORS
7. WHERE POWER AND TELEPHONE DUCTBANKS EXIST SIDE BY SIDE, THE SEPARATION SHALL BE A MINIMUM OF 12 INCHES.

LEGEND

DESCRIPTION	EXISTING
EXISTING TELEPHONE LINE	--T-----T--
EXISTING SECONDARY LINE	--S-----S--
EXISTING POWER LINE	--P-----P--
FIRE SYSTEM	--F-----F--
ELECTRIC LINE	--E-----E--
ELECTRIC MANHOLE	E
TELEPHONE MANHOLE	T
ELECTRIC BOX	
UTILITY TRENCH	
EXISTING AERIAL ELECTRICAL LINE	--AE-----AE--
EXISTING AERIAL PRIMARY	--AP-----AP--
EXISTING AERIAL SECONDARY	--AS-----AS--

GENERAL NOTES:
1. ALL ITEMS SHOWN ARE EXISTING TO REMAIN UNLESS NOTED OTHERWISE.

ELECTRICAL SITE PLAN - DEMOLITION

SCALE: 1" = 30'

30' 0 30' 60' 90'

GRAPHIC SCALE

SHERLOCK, SMITH & ADAMS, INC.
ARCHITECTS – ENGINEERS
MONTGOMERY, ALABAMA

U.S. NAVAL STATION ROOSEVELT ROADS, P.R.
REPAIRS TO NAVAL HOSPITAL
ELECTRICAL SITE PLAN – DEMOLITION

CONSTR. CONTR. NO.	SPECIFICATION NO.	NAVFAC DRWG. NO.	TF NO. XXXXX
XXXXX	XXXXX	XXXXX	SHEET ? OF ??

SEAL AREA

DIC. OH DIR. DATE: SATISFACTORY TO: DATE:

REVISION DESCRIPTION	DATE

DEPARTMENT OF THE NAVY
NAVAL FACILITIES ENGINEERING COMMAND
NAVY PUBLIC WORKS CENTER, JACKSONVILLE, FL
U.S. NAVAL STATION ROOSEVELT ROADS, P.R.
REPAIRS TO NAVAL HOSPITAL

PLATE NO.
ES

PWC # XX

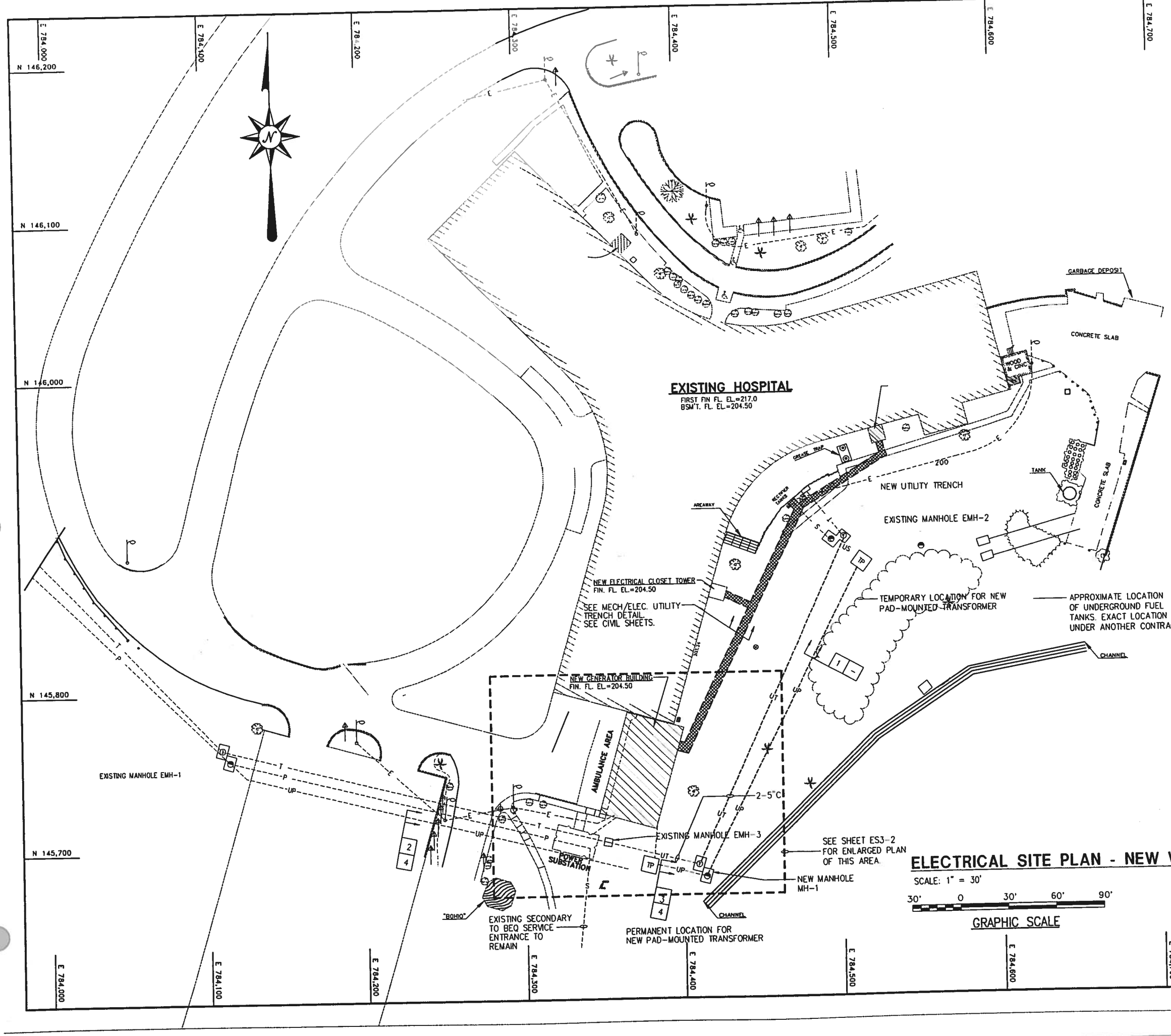

SUGGESTED SEQUENCE OF WORK

SCHEDULE OUTAGE FOR 12 HOUR PERIOD (APPROXIMATELY) ON THE WEEKEND TO BREAK THROUGH EXISTING MANHOLE WALLS AND BEGIN INITIAL POWER AND TELEPHONE DUCTBANK INSTALLATION.

INSTALL DUCTBANK AND PRIMARY CABLE FROM EXISTING MANHOLE EMH-1 ALL THE WAY TO TEMPORARY LOCATION FOR NEW PAD-MOUNTED TRANSFORMER

INSTALL DUCTBANK FOR RELOCATION OF TELEPHONE SERVICE.

INSTALL NEW PAD-MOUNTED TRANSFORMER AT TEMPORARY LOCATION.

SCHEDULE SECOND OUTAGE FOR 12 HOUR PERIOD (APPROXIMATELY) ON THE WEEKEND TO MAKE SPLICES FOR THE REROUTING OF THE TELEPHONE SERVICE AND THE TEMPORARY POWER SERVICE.

AFTER NEW SECONDARY SERVICE IS ENERGIZED, DISCONNECT PRIMARY POWER TO EXISTING UNIT SUBSTATION IN EMH-1 AND REMOVE OLD SECONDARY SERVICE FROM EMH-2 TO EXISTING UNIT SUBSTATION.

BUILD GENERATOR BUILDING.

INSTALL NEW SECONDARY SERVICE FROM THE EXISTING UNIT SUBSTATION TO THE NEW DOUBLE-ENDED SWITCHGEAR IN NEW BUILDING ADDITION.

AFTER TRANSFER OF EXISTING FEEDER CIRCUITS, TO NEW SWITCHGEAR DE-ENERGIZE AND SWITCHBOARDS. DE-ENERGIZE SERVICE TO NEW PAD-MOUNTED TRANSFORMER AND MOVE NEW PAD-MOUNTED TRANSFORMER TO PERMANENT POSITION. (SEE SHEET ES2-1).

ALL WORK SHALL BE IN ACCORDANCE WITH PHASING PLANS AND SCHEDULE. COORDINATE AS REQUIRED.

PRIMARY CABLE/DUCT BANK SCHEDULE

CABLE/DUCT DESIGNATION	DESCRIPTION	DUCT SIZE	REMARK
1	3-1/C, #2 EPR INSULATION	5"	SEE NOTE 1
2	3-1/C, #2 EPR INSULATION	5"	SEE NOTE 2
3	3-1/C, #2 EPR INSULATION	5"	SEE NOTE 1, 3
4	EMPTY	5"	

NOTES:

1. 1 WAY DUCTBANK.
2. 2 WAY DUCTBANK.
3. FOR TEMPORARY POWER.

LEGEND

DESCRIPTION		
EXISTING AERIAL TELEPHONE LINE	—AT——AT—	AT
EXISTING AERIAL SECONDARY LINE	—AS——AS—	AS
EXISTING AERIAL PRIMARY	—EP——EP—	EP
FIRE SYSTEM	—F——F—	F
EXISTING ELECTRIC LINE	--E----E--	E
EXISTING UNDERGROUND PRIMARY	--P----P--	P
EXISTING UNDERGROUND SECONDARY	--S----S--	S
EXISTING UNDERGROUND TELEPHONE LINE	--T----T--	T
NEW UNDERGROUND PRIMARY	--UP---UP--	UP
NEW UNDERGROUND SECONDARY	--US---US--	US
NEW UNDERGROUND TELEPHONE LINE	--UT---UT--	UT
ELECTRIC MANHOLE		
TELEPHONE MANHOLE		
UTILITY TRENCH		
DRAWOUT CIRCUIT BREAKER		
FUSED CUTOUT		
TRANSFORMER		
EXTERIOR LIGHT		
NEW CONDUCTOR OR CABLE DESCRIPTION TYPICAL. DESCRIPTION PER PRIMARY CABLE/DUCTBANK SCHEDULE THIS SHEET.		

ELECTRICAL SITE PLAN - NEW WORK

SCALE: 1" = 30'

30' 0 30' 60' 90'

GRAPHIC SCALE

SHERLOCK, SMITH & ADAMS, INC.
ARCHITECTS – ENGINEERS
MONTGOMERY, ALABAMA

U.S. NAVAL STATION ROOSEVELT ROADS, P.R.
REPAIRS TO NAVAL HOSPITAL
ELECTRICAL SITE PLAN – NEW WORK

CONSTR. CONTR. NO.	SPECIFICATION NO.	NAVFAC DRWG. NO.	TF NO. XXXXX
XXXXX	XXXXX	XXXXX	SHEET ? OF ??

SEAL AREA

ENG. DIV. DIR. DATE SATISFACTORY TO:

REVISION DESCRIPTION DATE

NAVAL FACILITIES ENGINEERING COMMAND
DEPARTMENT OF THE NAVY
NAVY PUBLIC WORKS CENTER, JACKSONVILLE, FL

ROOSEVELT ROADS, P.R.
U.S. NAVAL STATION REPAIRS TO NAVAL HOSPITAL

PLATE NO.
ES

PWC # XX

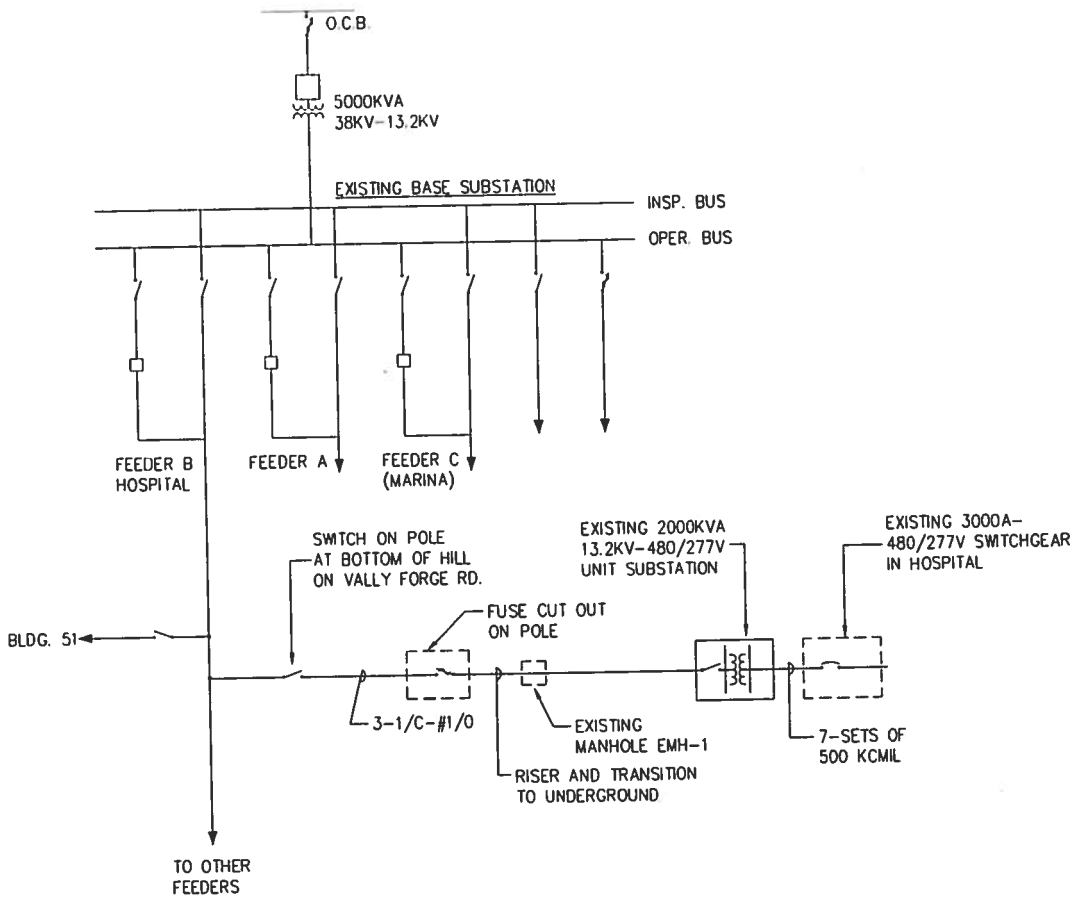

EXISTING PRIMARY SINGLE-LINE DIAGRAM

SCALE: NOT TO SCALE

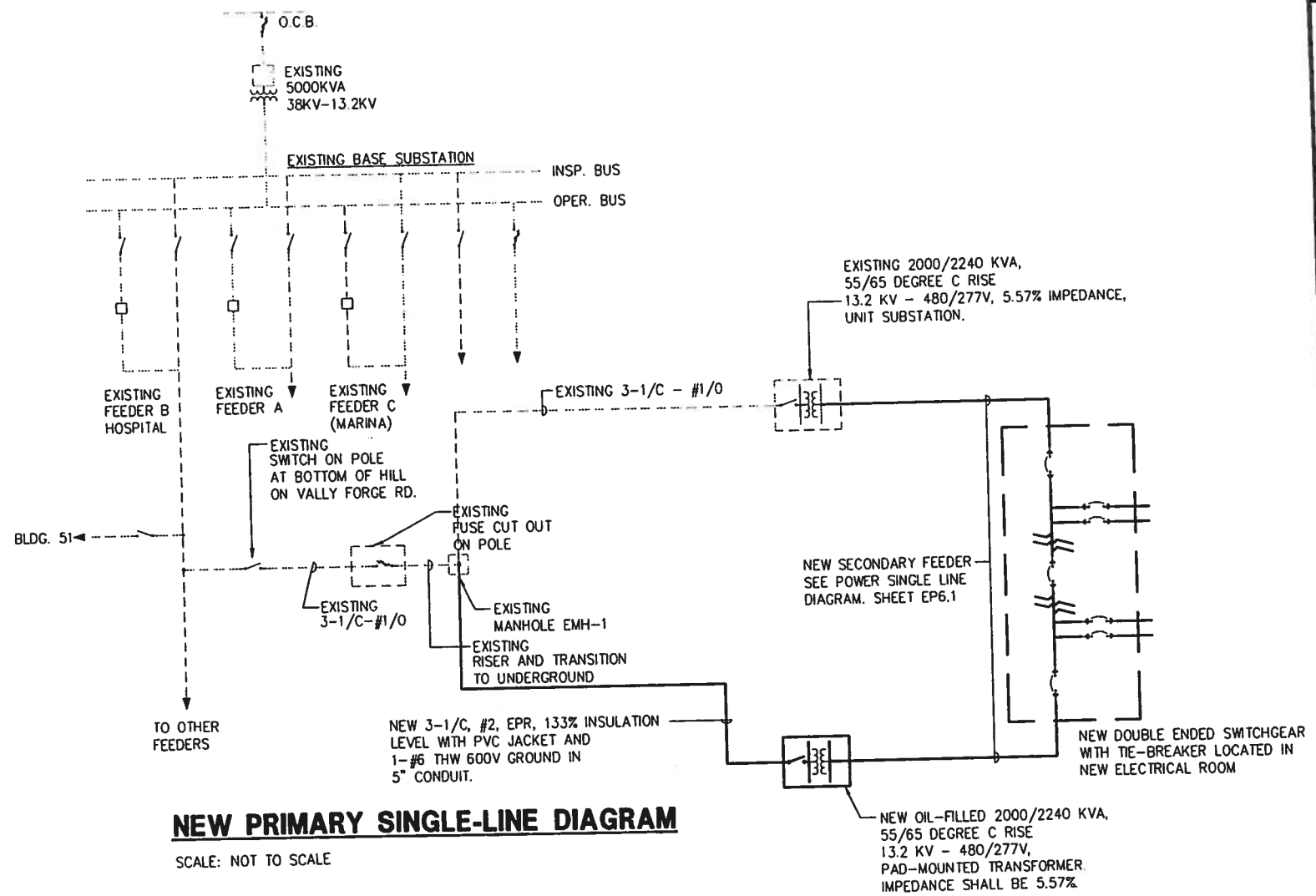

NEW PRIMARY SINGLE-LINE DIAGRAM

SCALE: NOT TO SCALE

LEGEND

- - - - - - - - EXISTING TO REMAIN

———————— NEW WORK

SHERLOCK, SMITH & ADAMS, INC.
ARCHITECTS - ENGINEERS
MONTGOMERY, ALABAMA

U.S. NAVAL STATION ROOSEVELT ROADS, P.R.

REPAIRS TO NAVAL HOSPITAL

PRIMARY SINGLE LINE DIAGRAMS

CONSTR. CONTR. NO.	SPECIFICATION NO.	NAVFAC DRWG. NO.	TF NO. XXXXX
XXXXX	XXXXX	XXXXX	SHEET ? OF ??

DEPARTMENT OF THE NAVY
NAVAL FACILITIES ENGINEERING COMMAND
NAVY PUBLIC WORKS CENTER, JACKSONVILLE, FL

REVISION DESCRIPTION | DATE | ENG. DIV. DIR.: | DATE

PLATE NO.

PWC

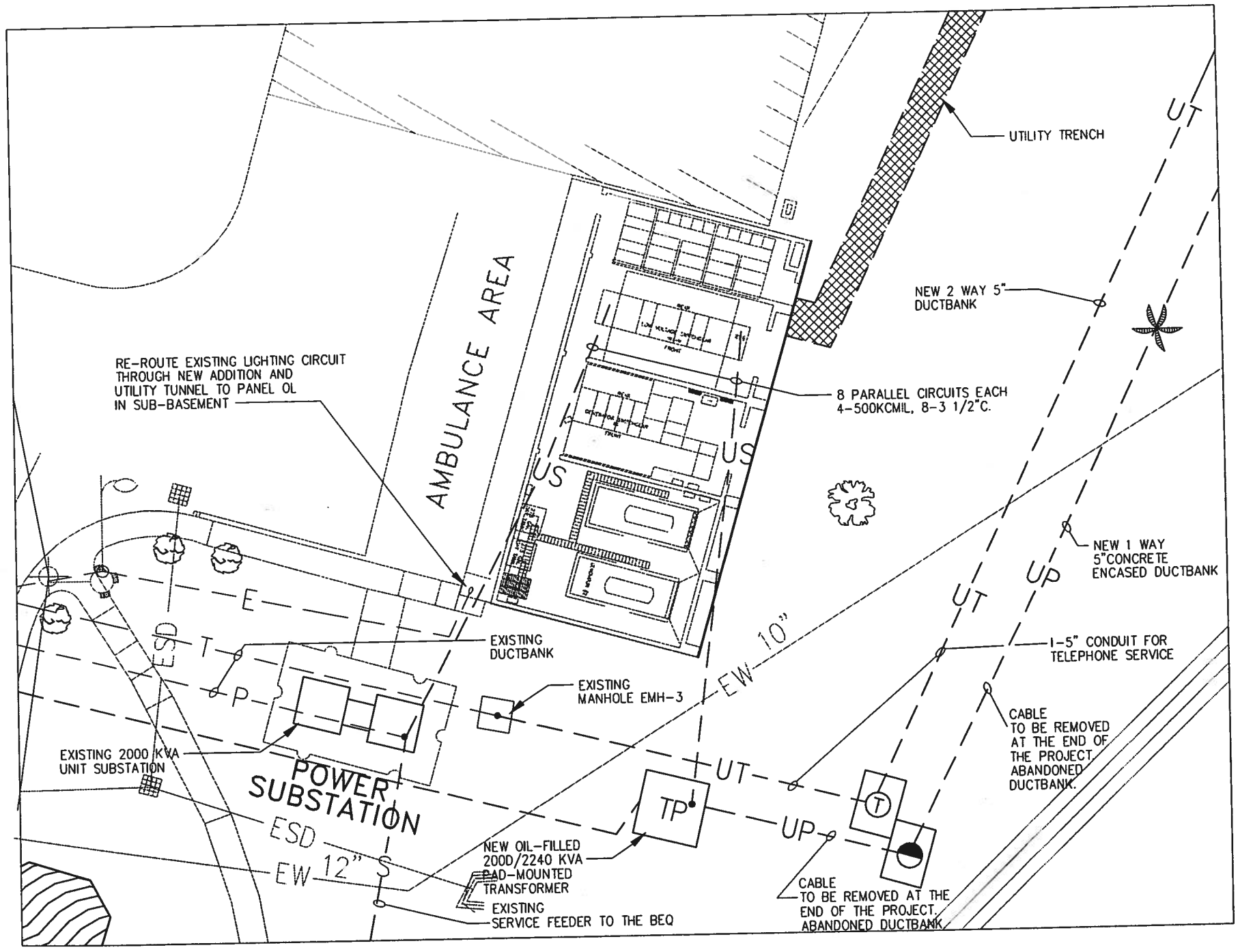

ENLARGED PLAN - UTILITY BUILDING

SCALE: 1" = 10'

SHERLOCK, SMITH & ADAMS, INC.
ARCHITECTS – ENGINEERS
MONTGOMERY, ALABAMA

U.S. NAVAL STATION ROOSEVELT ROADS, P.R.

REPAIRS TO NAVAL HOSPITAL

ENLARGED PLAN – UTILITY BUILDING

CONSTR. CONTR. NO.	SPECIFICATION NO.	NAVFAC DRWG. NO.	DF NO. XXXXX
XXXXX	XXXXX	XXXXX	SHEET ? OF ??

DEPARTMENT OF THE NAVY
NAVAL FACILITIES ENGINEERING COMMAND
NAVY PUBLIC WORKS CENTER, JACKSONVILLE, FL

REVISION DESCRIPTION | DATE

DWG. DN. DR.: ____ DATE: ____

PLATE NO. E

PWC

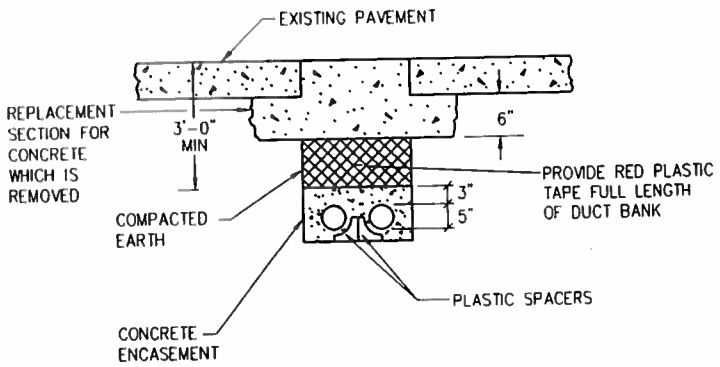

TYPICAL DUCT BANK SECTION OF 2-5" C BENEATH PAVED SURFACES

NO SCALE

NOTE: SIMILAR FOR 3-5" & 4-5" C DUCT BANKS

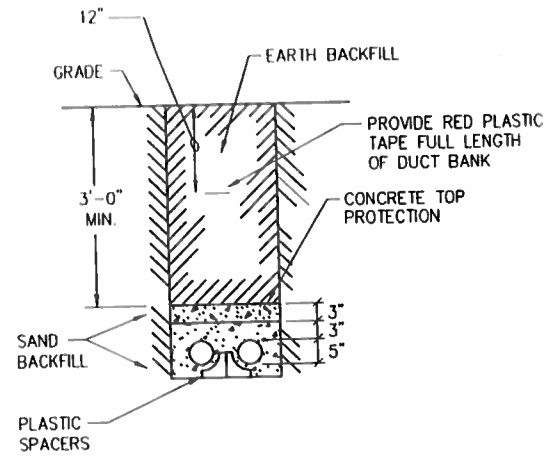

TYPICAL DUCT BANK SECTION OF 2-5" C BENEATH UNPAVED SURFACES

NO SCALE

NOTE: SIMILAR FOR 3-5" & 4-5" C DUCT BANKS

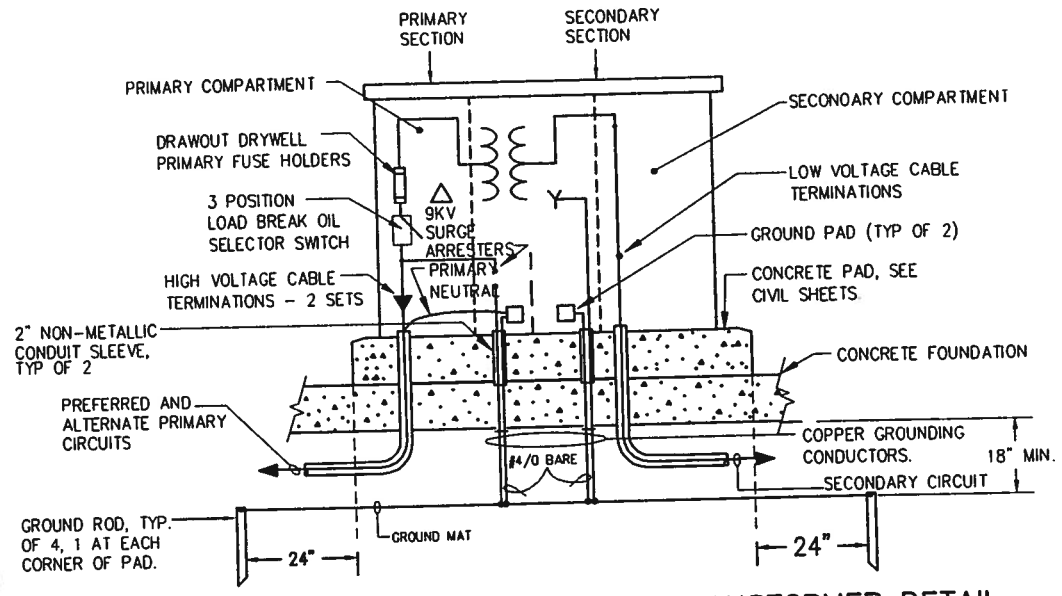

TYPICAL PAD-MOUNTED TRANSFORMER DETAIL

NO SCALE

2000KVA/2240KVA 55°/65°
13200/7200V TO 480Y/277V, 5.75%Z

NOTES:

1. GROUND RODS SHALL BE COPPER CLAD STEEL GROUND RODS 3/4" x 20'-0" IN LENGTH.

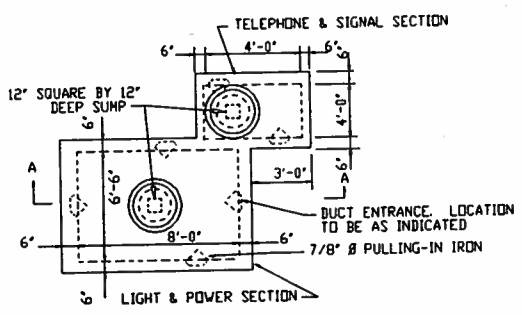

PLAN

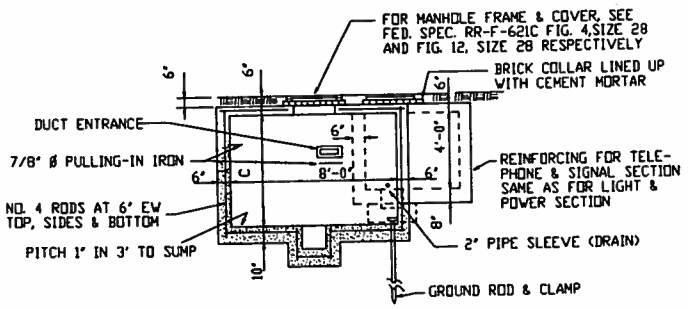

SECTION A-A

STANDARD ELECTRICAL MANHOLE (NONTRAFFIC)

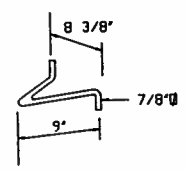

DETAIL OF PULLING-IN IRON

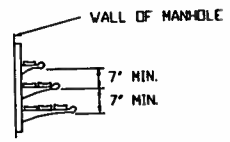

TYPICAL CABLE RACK

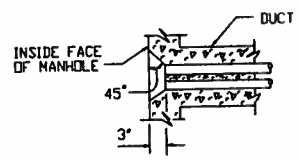

TYPICAL DUCT ENTRANCE

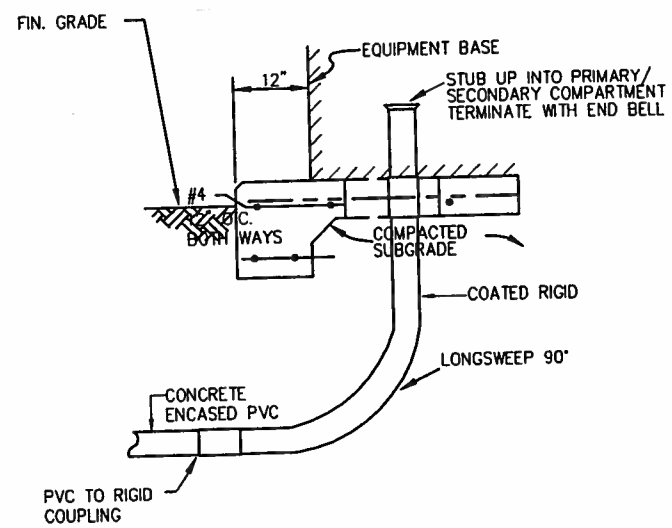

TYPICAL EQUIPMENT STUB UP

NO SCALE

SHERLOCK, SMITH & ADAMS, INC.
ARCHITECTS - ENGINEERS
MONTGOMERY, ALABAMA

U.S. NAVAL STATION ROOSEVELT ROADS, P.R.

REPAIRS TO NAVAL HOSPITAL

ELECTRICAL SITE DETAILS

CONSTR. CONTR. NO.	SPECIFICATION NO.	HAVFAC DRWG. NO.	TF NO. XXXXX
XXXXX	XXXXX	XXXXX	SHEET ? OF ??

PLATE NO. E

DEPARTMENT OF THE NAVY
NAVAL FACILITIES ENGINEERING COMMAND
NAVY PUBLIC WORKS CENTER, JACKSONVILLE, FL

REVISION DESCRIPTION | DATE | DWG. DN. DR. | DATE

PWC

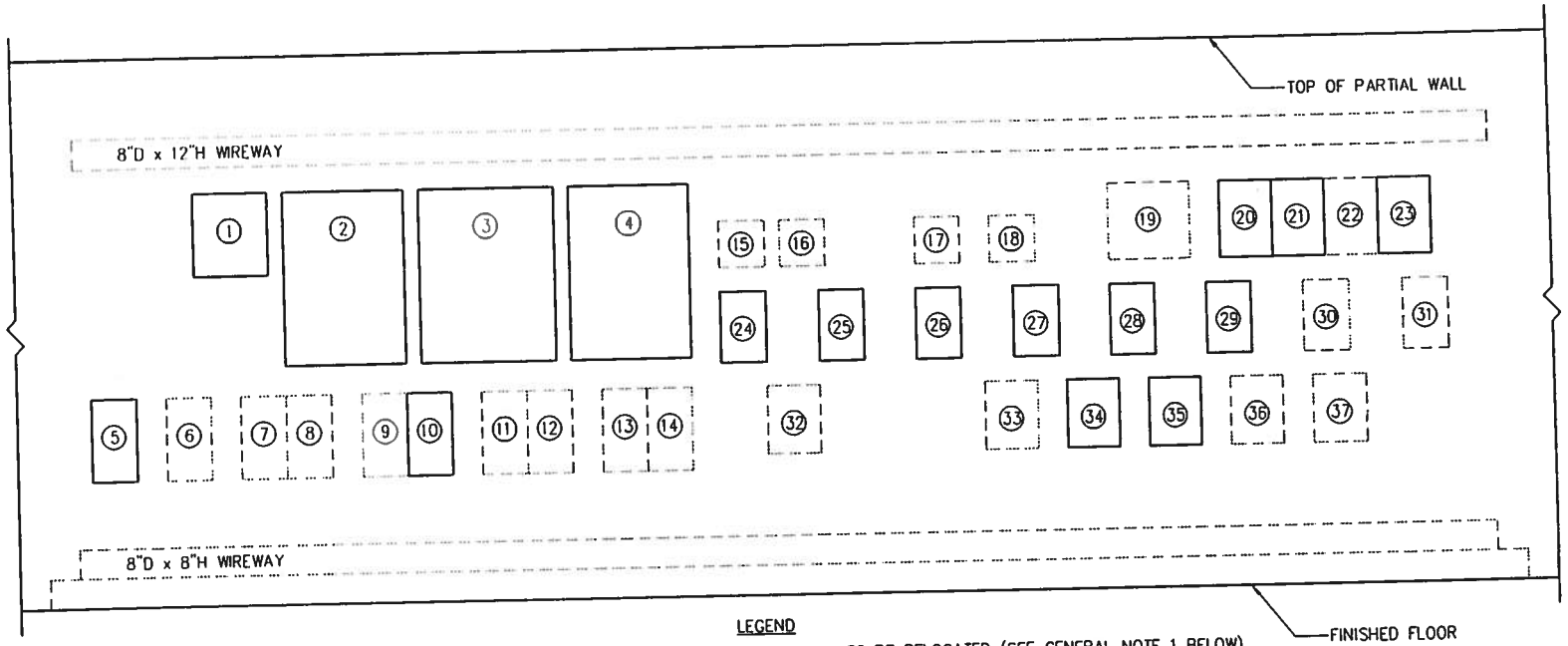

ELEVATION A

SCALE: NOT TO SCALE

LEGEND

——— TO BE RELOCATED (SEE GENERAL NOTE 1 BELOW)

- - - - - TO BE REMOVED

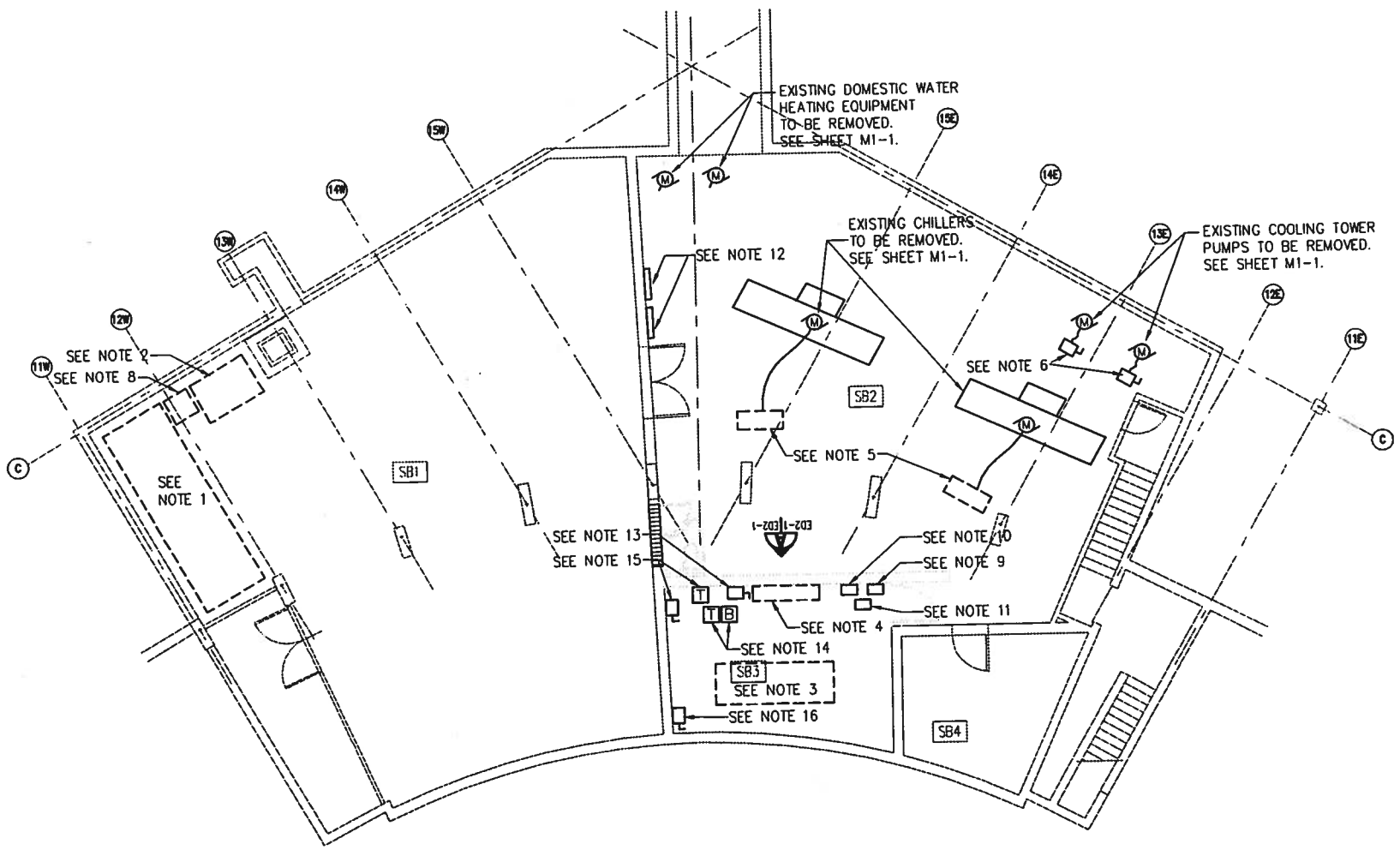

DEMOLITION FLOOR PLAN SUB-BASEMENT FLOOR

SCALE: 1/8" = 1'-0"

COORDINATE ALL DEMOLITION WITH THE PHASING PLANS. SEE SHEETS A0-2 TO A0-5.

ELEVATION – A NOTES:

1. RELOCATE STARTER/DISCONNECT SWITCH(AHU NO. 8 SUPPLY)
2. RELOCATE STARTER/DISCONNECT SWITCH(AHU NO. 1 INTERIOR AIR)
3. RELOCATE STARTER/DISCONNECT SWITCH(AHU NO. 2 EXTERIOR AIR)
4. RELOCATE STARTER/DISCONNECT SWITCH(AHU NO. 4 INDUCTION UNITS)
5. RELOCATE STARTER/DISCONNECT SWITCH(CHILLER ON ROOF FOR GALLEY)
6. REMOVE STARTER/DISCONNECT SWITCH
7. REMOVE STARTER/DISCONNECT SWITCH
8. REMOVE STARTER/DISCONNECT SWITCH
9. REMOVE STARTER/DISCONNECT SWITCH(MED. AIR. COMP. No. 2)
10. RELOCATE STARTER/DISCONNECT SWITCH(MED. AIR. COMP. No 1)
11. REMOVE STARTER/DISCONNECT SWITCH(RE-HEAT CIRC. PUMP 5)
12. REMOVE STARTER/DISCONNECT SWITCH(RE-HEAT CIRC. PUMP 4)
13. REMOVE STARTER/DISCONNECT SWITCH(CIR. PUMP INDUCTION 9)
14. REMOVE STARTER/DISCONNECT SWITCH(CIR. PUMP INDUCTION 8)
15. REMOVE STARTER (COOLING TOWER 1)
16. REMOVE DISCONNECT SWITCH(COOLING TOWER 1)
17. REMOVE STARTER (CODLING TOWER 2)
18. REMOVE DISCONNECT SWITCH(COOLING TOWER 2)
19. REMOVE STARTER/DISCONNECT SWITCH(OPERATING ROOMS AHU-3)
20. RELOCATE STARTER/DISCONNECT SWITCH(EMERGENCY 30, CIRC. C-10)
21. RELOCATE STARTER/DISCONNECT SWITCH(EMERGENCY 31, CIRC. C-11)
22. REMOVE STARTER/DISCONNECT SWITCH(SPARE)
23. RELOCATE STARTER/DISCONNECT SWITCH(RETURN FAN R-1)
24. RELOCATE STARTER/DISCONNECT SWITCH(SUB-BASEMENT AIR SUPPLY AHU No. 5)
25. RELOCATE STARTER/DISCONNECT SWITCH(SUB-BASEMENT AIR SUPPLY AHU No. 6)
26. RELOCATE STARTER/DISCONNECT SWITCH(KIT. RETURN AHU No. 7 & 8)
27. RELOCATE STARTER/DISCONNECT SWITCH(STANDBY PUMP)
28. RELOCATE STARTER/DISCONNECT SWITCH(CHILL WATER PUMP No. 1)
29. RELOCATE STARTER/DISCONNECT SWITCH(CHILL WATER PUMP No. 2)
30. REMOVE STARTER/DISCONNECT SWITCH(COND. WATER PUMP No. 1)
31. REMOVE STARTER/DISCONNECT SWITCH(COND. WATER PUMP No. 2)
32. REMOVE H-O-A SWITCH(COOLING TOWER 1)
33. REMOVE H-O-A SWITCH(COOLING TOWER 2)
34. RELOCATE H-O-A SWITCH(CHILLED WATER PUMP No. 1)
35. RELOCATE H-O-A SWITCH(CHILLED WATER PUMP No. 2)
36. REMOVE H-O-A SWITCH(COND. WATER PUMP No. 1)
37. REMOVE H-O-A SWITCH(COND. WATER PUMP No. 2)

GENERAL NOTES:

1. RELOCATE ALL DEVICES TO BE RELOCATED TO AVAILABLE WALL SPACE TO LEFT OF ENTRY DOOR.
2. INSTALL PIECE OF SHEET METAL MOUNTED ABOVE ALL DEVICES THAT IS RELOCATED TO THE WALL AT THE ENTRY DOOR TO ACT AS WATER SHIELD FOR DEVICES.

PLAN – NOTES:

1. REMOVE 800KW EMERGENCY GENERATOR, FUEL SYSTEM (INCLUDING FUEL LINES TO ENTRANCE OF SUB-BASEMENT), RACK OF BATTERIES, SILENCER (AFTER ASBESTOS REMOVAL) DAY BANKS (WITH ASSOCIATED PIPING), BATTERY CHARGER AND HEAT EXCHANGER(WITH ASSOCIATED PIPING UP TO COOLING TOWER). TURN EQUIPMENT OVER TO THE GOVERNMENT.
2. REMOVE 1200A/4P AUTOMATIC TRANSFER SWITCH WITH BYPASS ISOLATION OPTION. TURN EQUIPMENT OVER TO THE GOVERNMENT.
3. REMOVE 3000A MAIN SWITCHBOARD.
4. REMOVE 1200A EMERGENCY DISTRIBUTION PANEL "EDP".
5. REMOVE CHILLER STARTER AND CONTROLS.
6. REMOVE EXISTING DISCONNECT SWITCH, WIRE AND CONDUIT BACK TO SOURCE.
7. WHERE DEVICES ARE BEING REMOVED, REMOVE WIRE AND CONDUIT BACK TO THE POWER SOURCE FOR THAT DEVICE.
8. REMOVE GENERATOR CONTROL PANEL. TURN EQUIPMENT OVER TO THE GOVERNMENT.
9. RELOCATE TIME CLOCK FOR EMPLOYEE'S PUNCH IN PER FACILITY MANAGERS INSTRUCTIONS.
10. EXISTING PANEL "LP-SE" TO BE REMOVED AFTER THE FOLLOWING RE-CIRCUITING:
    A) LP-SE:10 (EXISTING) TO L4BD:2
    B) LP-SE:6 (EXISTING) TO L4BD:4
    C) LP-SE:7 (EXISTING) TO L41D:4
    D) LP-SE:9 (EXISTING) TO L42C:2
    E) LP-SE:8 (EXISTING) TO L42C:4
11. RELOCATE EXISTING ALARMS FOR THE FIRE ALARM SYSTEM TO AVAILABLE WALL SPACE IN ROOM SB4 AND RE-CIRCUIT TO PANEL L4BD:6.
12. REMOVE 600A DISCONNECT SWITCHES.
13. REMOVE 400A DISCONNECT SWITCH FOR FIRE PUMP SYSTEM.
14. REMOVE 225KVA TRANSFORMER AND ENCLOSED CIRCUIT BREAKER.
15. RELOCATE EXISTING TRANSFORMER TR-FA. EXISTING TRANSFORMER SWITCH AND FAN FOR SHUTDOWN RELAYS. EXISTING 60A/3P DISCONNECT SWITCH TO NEW LOCATION. SEE SHEET EP2-1.
16. REMOVE EXISTING MANUAL TRANSFER SWITCH.

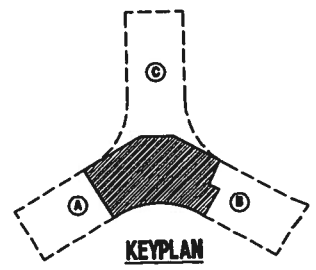

KEYPLAN

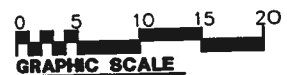

GRAPHIC SCALE
1/8"=1'-0"

DEPARTMENT OF THE NAVY
NAVAL FACILITIES ENGINEERING COMMAND
NAVY PUBLIC WORKS CENTER, JACKSONVILLE, FL

REVISION DESCRIPTION | DWG. ON: DR.: | DATE

SHERLOCK, SMITH & ADAMS, INC.
ARCHITECTS – ENGINEERS
MONTGOMERY, ALABAMA

U.S. NAVAL STATION ROOSEVELT ROADS, P.R.
REPAIRS TO NAVAL HOSPITAL
ELECTRICAL DEMOLITION PLAN – SUB-BASEMENT FLOOR

CONSTR. CONTR. NO.	SPECIFICATION NO.	NAVFAC DRWG. NO.	TF NO. XXXXX
XXXXX	XXXXX	XXXXX	SHEET ? OF ??

PLATE NO.

PWC

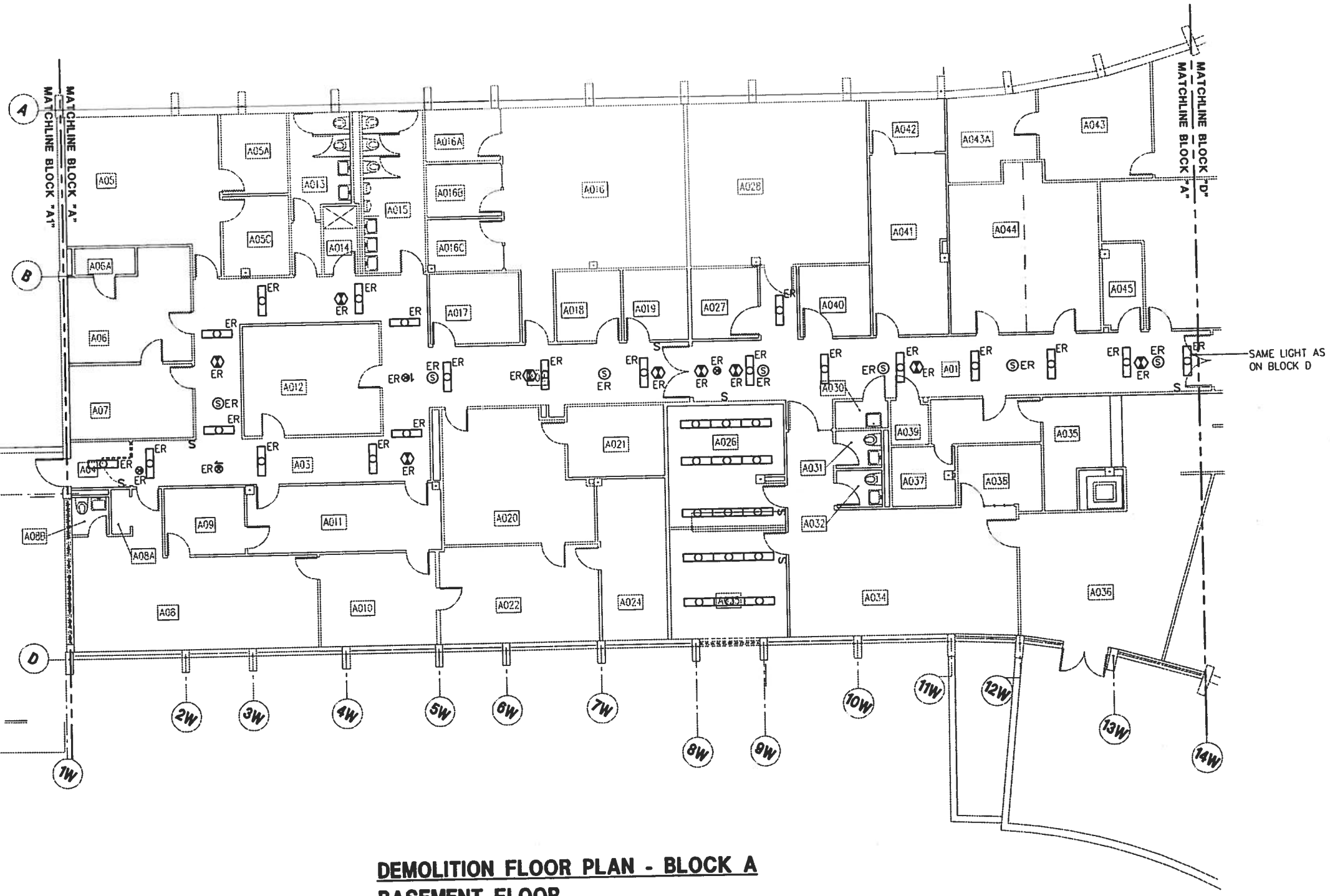

DEMOLITION FLOOR PLAN - BLOCK A
BASEMENT FLOOR

SCALE: 1/8" = 1'-0"

NOTES:

1. WHERE DEVICES ARE BEING REMOVED, REMOVE WIRE AND CONDUIT BACK TO THE POWER SOURCE FOR THAT DEVICE.
2. DEVICES SHOWN IN CORRIDOR CEILINGS THAT ARE TO REMAIN SHALL BE REMOVED AND RE-INSTALLED IN NEW CEILING AS NECESSARY. SEE WIRING ON NEW WORK PLANS (EP2-1 THRU EP2-10).
3. SUPPORT ALL EXISTING LIGHT FIXTURES SHOWN IN CORRIDORS AND ALL NEW LIGHT FIXTURES SEIMICALLY.

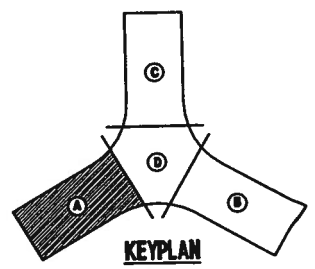

KEYPLAN

0 5 10 15 20
GRAPHIC SCALE
1/8"=1'-0"

SHERLOCK, SMITH & ADAMS, INC.
ARCHITECTS – ENGINEERS
MONTGOMERY, ALABAMA

U.S. NAVAL STATION ROOSEVELT ROADS, P.R.
REPAIRS TO NAVAL HOSPITAL
ELECTRICAL DEMOLITION PLAN – BASEMENT FLOOR BLOCK A

CONSTR. CONTR. NO.	SPECIFICATION NO.	NAVFAC DRWG. NO.	TF NO. XXXXX
XXXXX	XXXXX	XXXXX	SHEET ? OF ??

DEPARTMENT OF THE NAVY
NAVAL FACILITIES ENGINEERING COMMAND
NAVY PUBLIC WORKS CENTER, JACKSONVILLE, FL

PLATE NO.
E

PWC

REVISION DESCRIPTION	DATE	ENG. DIV. DIR.	DATE