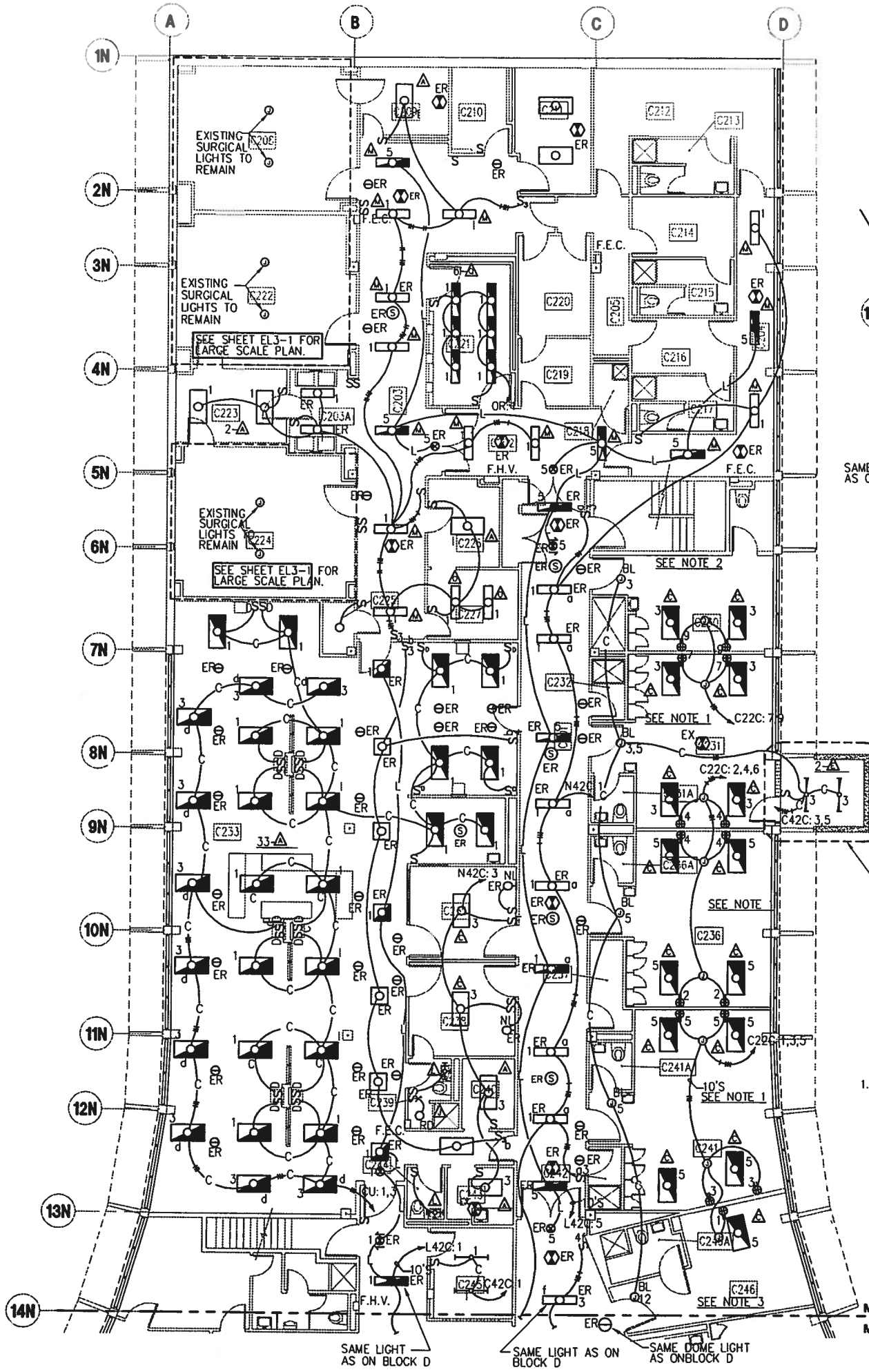

KEYED NOTES:

1. TYPICAL 4 BED PATIENT ROOM. SEE SHEET EL3-2.
2. TYPICAL 2 BED PATIENT ROOM. SEE SHEET EL3-2.
3. TYPICAL 1 BED PATIENT ROOM. SEE SHEET EL3-2.

GENERAL NOTES:

1. ALL DISCONNECT SWITCHES SHOWN SHALL BE 30A/3P-480V NON-FUSED SWITCHES IN NEMA 1 ENCLOSURE UNLESS OTHERWISE NOTED.

FLOOR PLAN - BLOCK C
SECOND FLOOR
SCALE: 1/8"=1'-0"

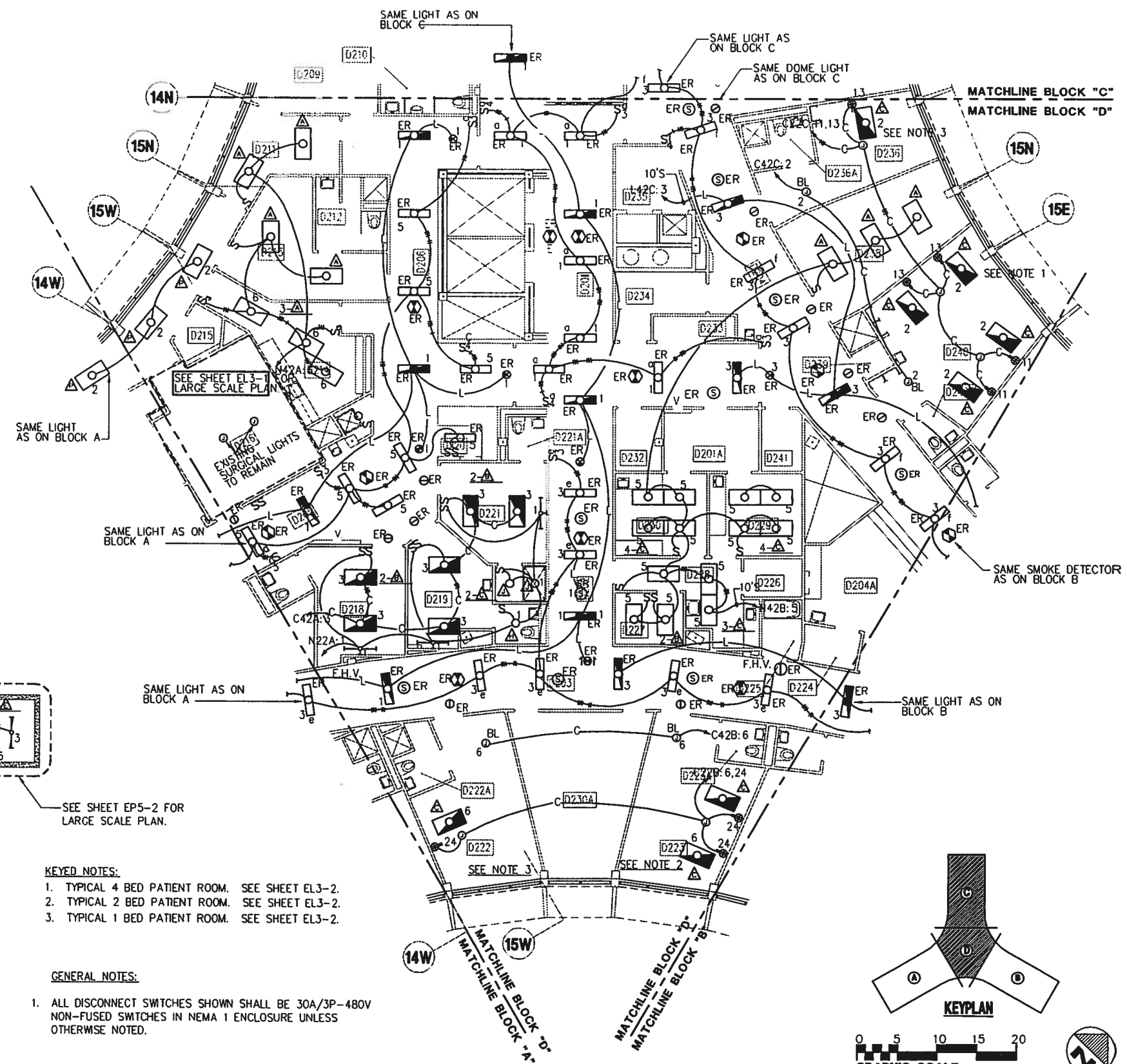

FLOOR PLAN - BLOCK D
SECOND FLOOR
SCALE: 1/8"=1'-0"

SHERLOCK, SMITH & ADAMS, INC.
ARCHITECTS - ENGINEERS
MONTGOMERY, ALABAMA

U.S. NAVAL STATION ROOSEVELT ROADS, P.R.
REPAIRS TO NAVAL HOSPITAL
ELECTRICAL PLAN-SECOND FLOOR-BLOCKS C & D

CONSTR. CONTR. NO.	SPECIFICATION NO.	NAVFAC DRWG. NO.	TF NO. XXXXX
XXXXX	XXXXX	XXXXX	SHEET ? OF ??

PLATE NO.
EP2-1

DEPARTMENT OF THE NAVY
NAVAL FACILITIES ENGINEERING COMMAND
NAVY PUBLIC WORKS CENTER, JACKSONVILLE, FL
U.S. NAVAL STATION ROOSEVELT ROADS, P.R.
REPAIRS TO NAVAL HOSPITAL
ELECTRICAL PLAN -

SEAL AREA

REVISION DESCRIPTION	DATE	ENG. DIV. DIR.	DATE	SATISFACTORY TO:	DATE

PWC # XXXXX

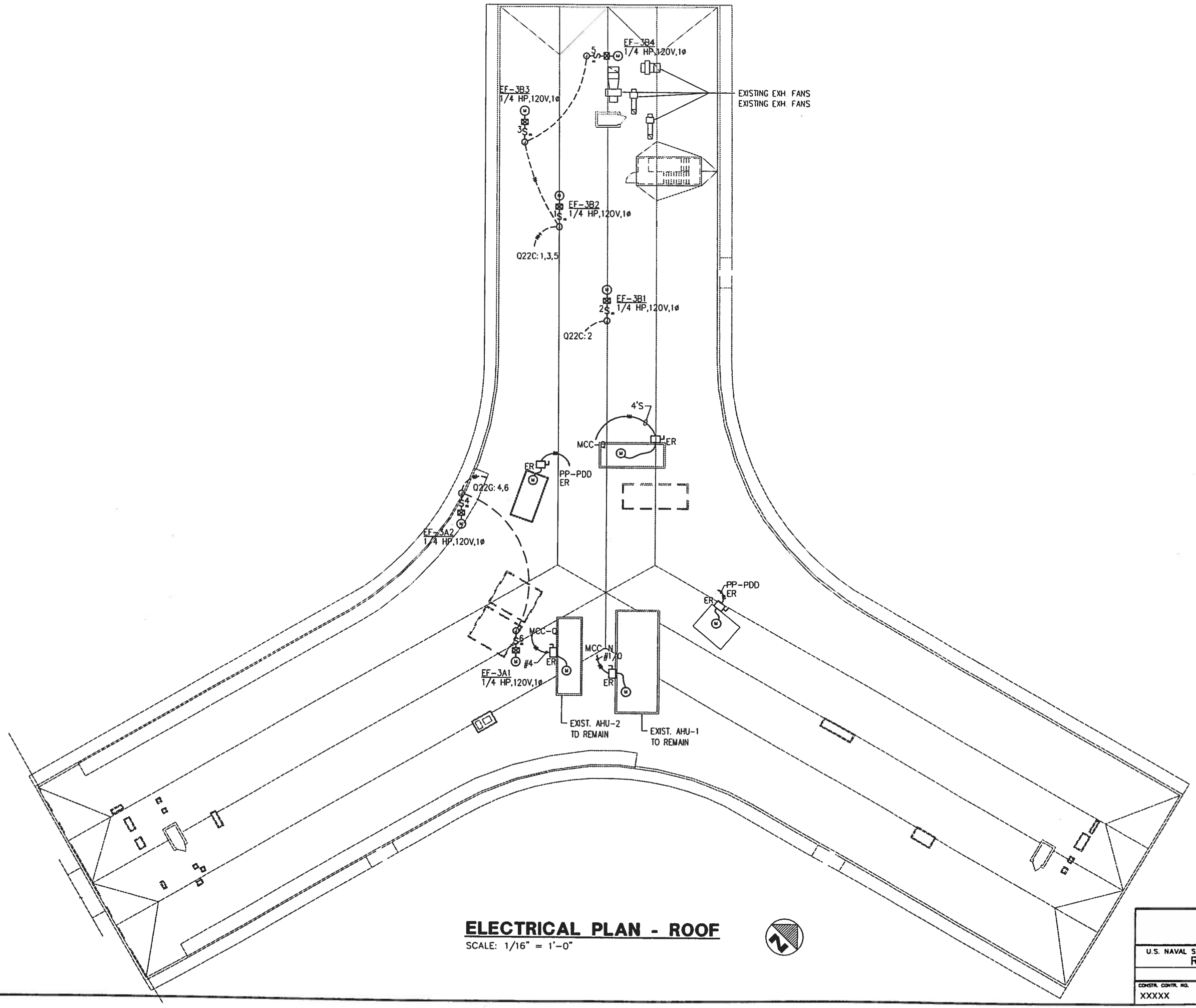

ELECTRICAL PLAN - ROOF

SCALE: 1/16" = 1'-0"

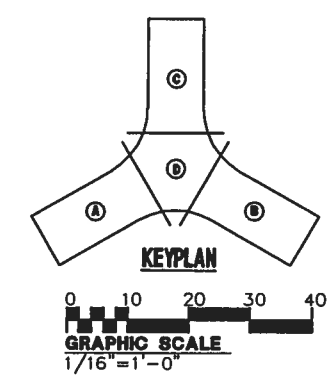

SEAL AREA

ENG. DIV. DIR.: DATE:

SATISFACTORY TO: DATE:

REVISION DESCRIPTION	DATE

DEPARTMENT OF THE NAVY — NAVAL FACILITIES ENGINEERING COMMAND

NAVY PUBLIC WORKS CENTER, JACKSONVILLE, FL

U.S. NAVAL STATION ROOSEVELT ROADS, P.R.

REPAIRS TO NAVAL HOSPITAL

ELECTRICAL PLAN - ROOF

SHERLOCK, SMITH & ADAMS, INC.
ARCHITECTS - ENGINEERS
MONTGOMERY, ALABAMA

U.S. NAVAL STATION ROOSEVELT ROADS, P.R.
REPAIRS TO NAVAL HOSPITAL
ELECTRICAL PLAN - ROOF

CONSTR. CONTR. NO.	SPECIFICATION NO.	NAVFAC DRWG. NO.	TF NO. XXXXX
XXXXX	XXXXX	XXXXX	SHEET ? OF ??

PLATE NO.

EP2-11

PWC # XXXXX

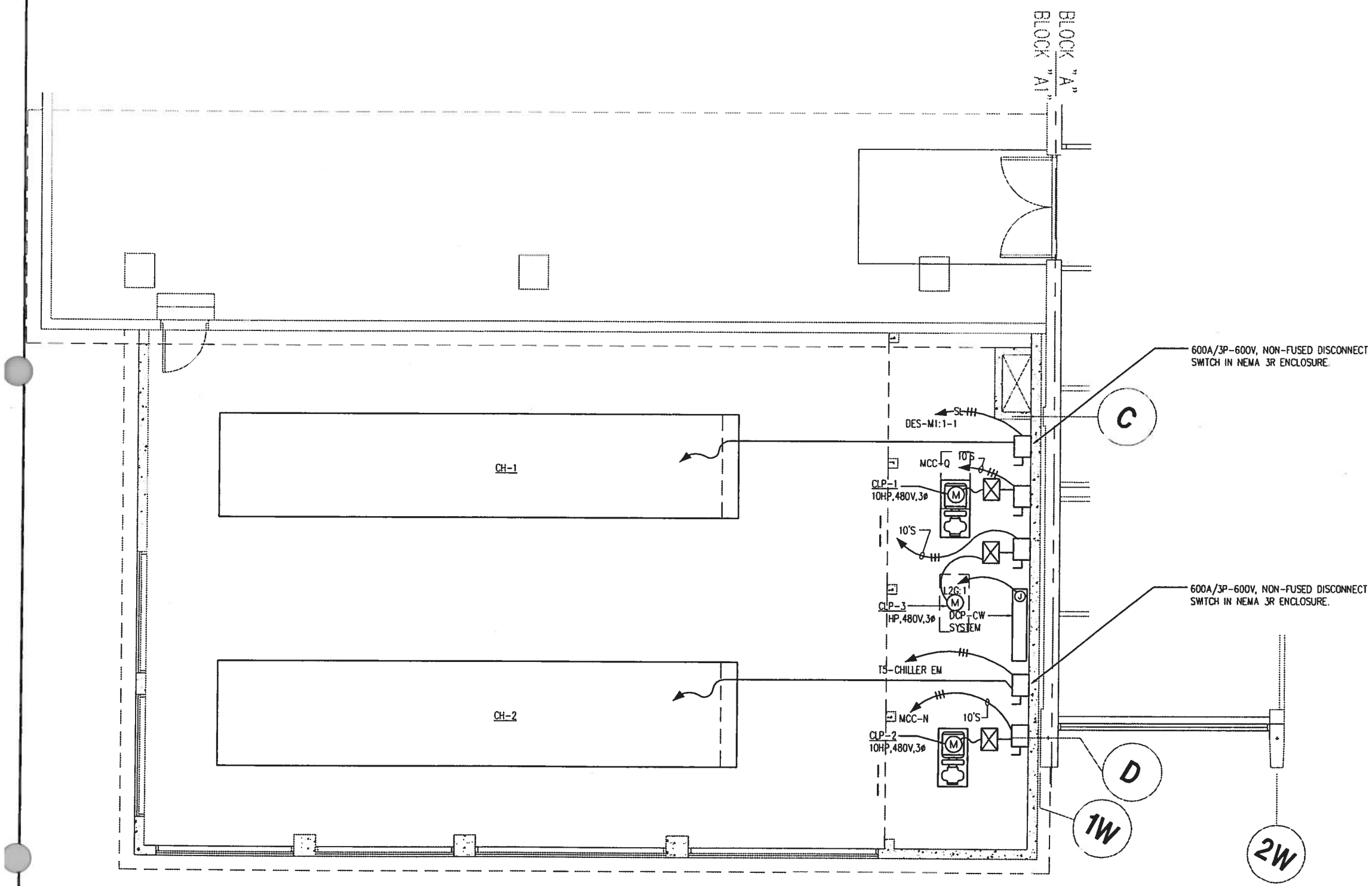

ELECTRICAL PLAN - UTILITY BUILDING

SCALE: 1/4" = 1'-0"

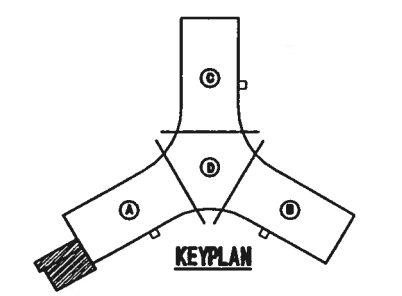

KEYPLAN

0 5 10 15

GRAPHIC SCALE
1/4"=1'-0"

SEAL AREA

ENG. DIV. DIR.: DATE:
SATISFACTORY TO: DATE:

DATE	REVISION DESCRIPTION

NAVAL FACILITIES ENGINEERING COMMAND
DEPARTMENT OF THE NAVY
NAVY PUBLIC WORKS CENTER, JACKSONVILLE, FL
U.S. NAVAL STATION ROOSEVELT ROADS, P.R.
REPAIRS TO NAVAL HOSPITAL
ELECTRICAL PLAN - UTILITY BUILDING

SHERLOCK, SMITH & ADAMS, INC.
ARCHITECTS - ENGINEERS
MONTGOMERY, ALABAMA

U.S. NAVAL STATION ROOSEVELT ROADS, P.R.
REPAIRS TO NAVAL HOSPITAL
ELECTRICAL PLAN - UTILITY BUILDING

CONSTR. CONTR. NO.	SPECIFICATION NO.	NAVFAC DRWG. NO.	TF NO. XXXXX
XXXXX	XXXXX	XXXXX	SHEET ? OF ??

PLATE NO.
EP3-1

PWC # XXXXX

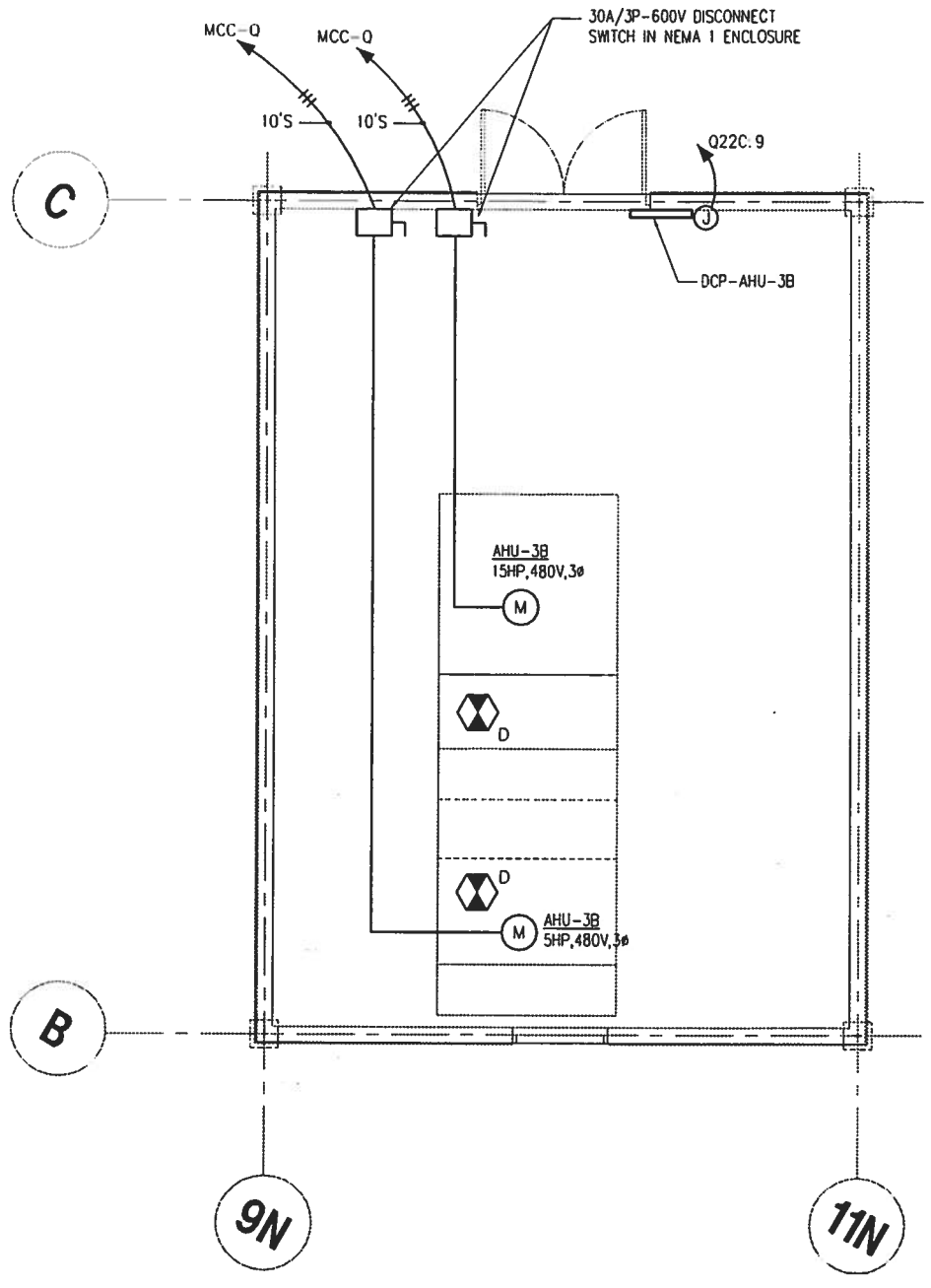

ENLARGED FLOOR PLAN - ELECT PENTHOUSE NO.1 BLOCK "C"

SCALE: 1/4" = 1'-0"

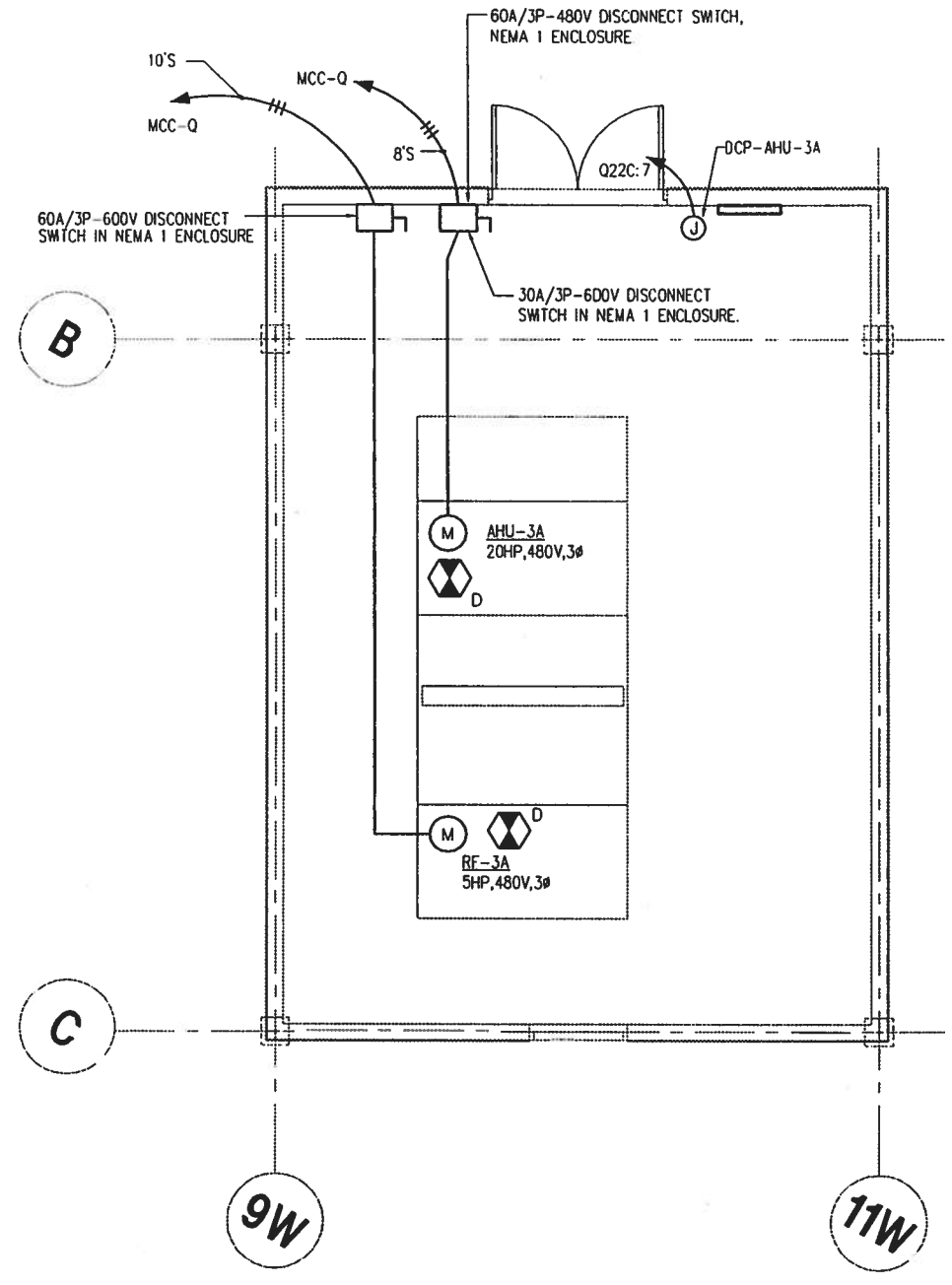

ENLARGED FLOOR PLAN - ELECT PENTHOUSE NO.1 BLOCK "A"

SCALE: 1/4" = 1'-0"

0 5 10 15

GRAPHIC SCALE
1/4"=1'-0"

SEAL AREA

ENG. DIV. DIR.: DATE:
SATISFACTORY TO: DATE:

REVISION DESCRIPTION	DATE

NAVAL FACILITIES ENGINEERING COMMAND
DEPARTMENT OF THE NAVY
NAVY PUBLIC WORKS CENTER, JACKSONVILLE, FL
U.S. NAVAL STATION ROOSEVELT ROADS, P.R.
REPAIRS TO NAVAL HOSPITAL
ENLARGED FLOOR PLAN - ELECT PENTHOUSE NO.1 BLOCK "A"

SHERLOCK, SMITH & ADAMS, INC.
ARCHITECTS - ENGINEERS
MONTGOMERY, ALABAMA

U.S. NAVAL STATION ROOSEVELT ROADS, P.R.
REPAIRS TO NAVAL HOSPITAL
ENLARGED FLOOR PLAN - ELECT PENTHOUSE NO.1 BLOCK "A"

CONSTR. CONTR. NO.	SPECIFICATION NO.	NAVFAC DRWG. NO.	TF NO. XXXXX
XXXXX	XXXXX	XXXXX	SHEET ? OF ??

PLATE NO.
EP3-2

PWC # XXXXX

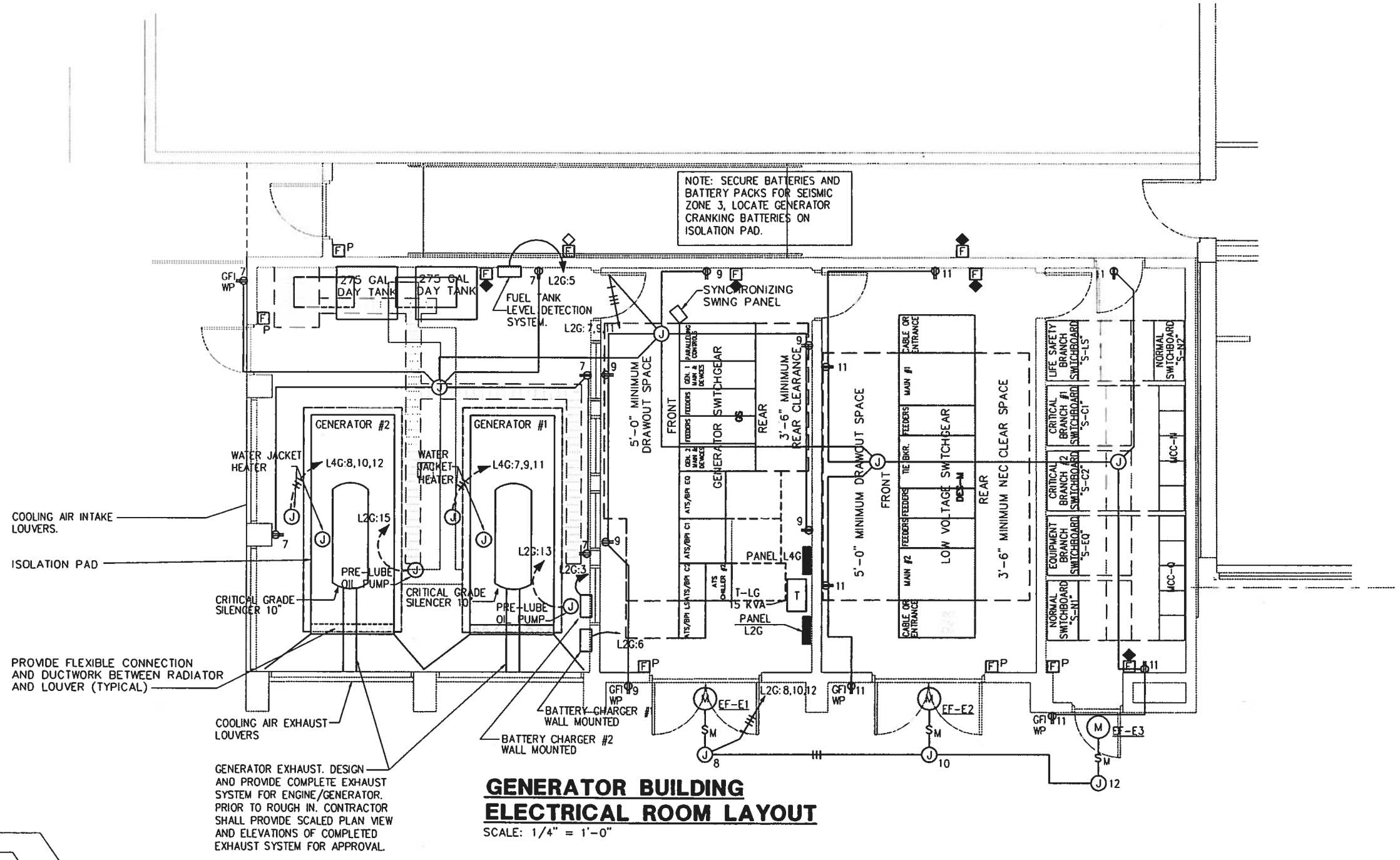

GENERATOR BUILDING ELECTRICAL ROOM LAYOUT

SCALE: 1/4" = 1'-0"

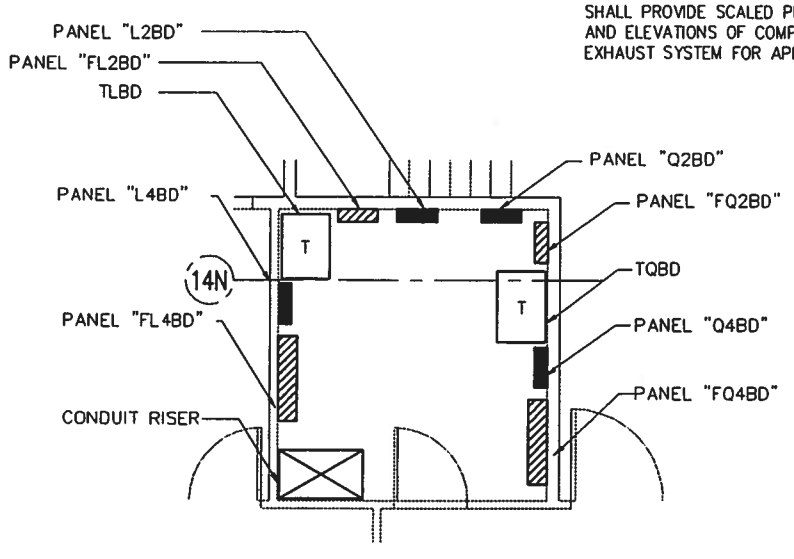

BASEMENT FLOOR - WING "D" ELECTRICAL ROOM - "BD" LAYOUT

SCALE: 1/4" = 1'-0"

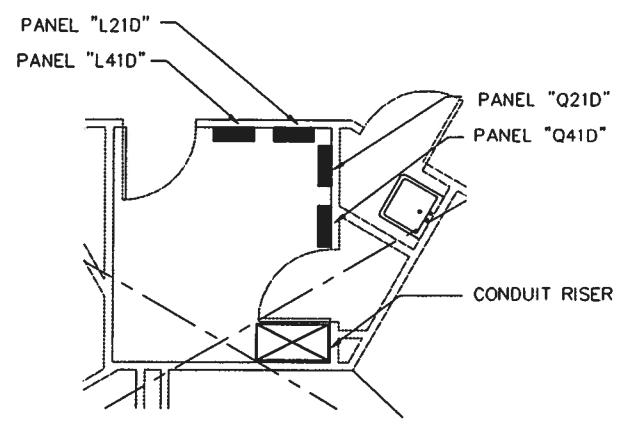

FIRST FLOOR - WING "D" ELECTRICAL ROOM - "1D" LAYOUT

SCALE: 1/4" = 1'-0"

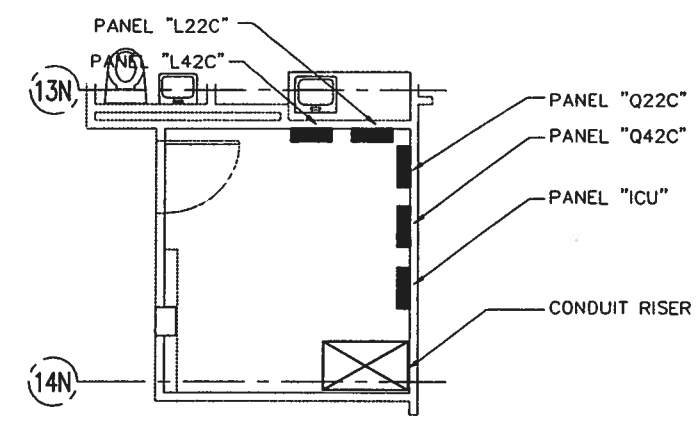

SECOND FLOOR - WING "C" ELECTRICAL ROOM - "2CA" LAYOUT

SCALE: 1/4" = 1'-0"

0 5 10 15

GRAPHIC SCALE
1/4"=1'-0"

SHERLOCK, SMITH & ADAMS, INC.
ARCHITECTS - ENGINEERS
MONTGOMERY, ALABAMA

U.S. NAVAL STATION ROOSEVELT ROADS, P.R.
REPAIRS TO NAVAL HOSPITAL
ELECTRICAL ROOM LAYOUTS - 1/4" SCALE

CONSTR. CONTR. NO.	SPECIFICATION NO.	NAVFAC DRWG. NO.	TF NO. XXXXX
XXXXX	XXXXX	XXXXX	SHEET ? OF ??

DEPARTMENT OF THE NAVY
NAVAL FACILITIES ENGINEERING COMMAND
NAVY PUBLIC WORKS CENTER, JACKSONVILLE, FL

U.S. NAVAL STATION ROOSEVELT ROADS, P.R.
REPAIRS TO NAVAL HOSPITAL
ELECTRICAL ROOM LAYOUTS - 1/4" SCALE

PLATE NO.
EP5-1

PWC # XXXXX

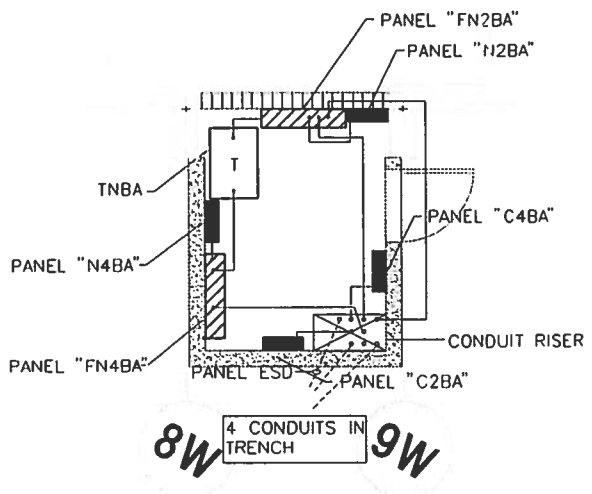

BASEMENT FLOOR - WING "A"
ELECTRICAL ROOM - "BA" LAYOUT
SCALE: 1/4" = 1'-0"

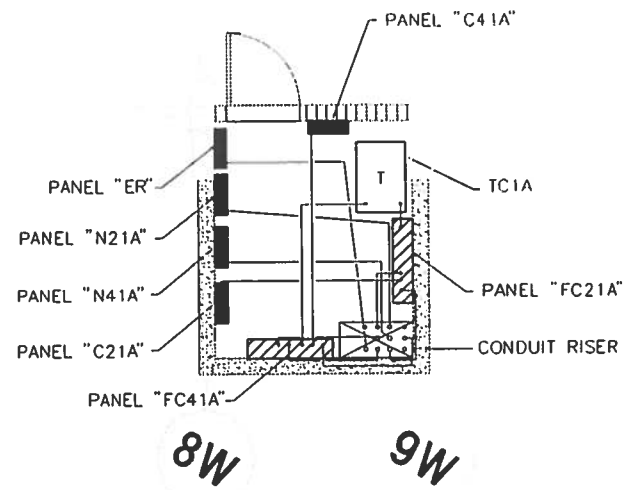

FIRST FLOOR - WING "A"
ELECTRICAL ROOM - "1A" LAYOUT
SCALE: 1/4" = 1'-0"

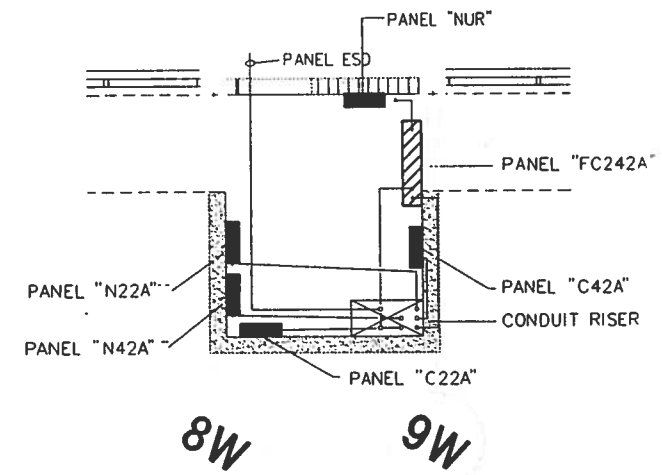

SECOND FLOOR - WING "A"
ELECTRICAL ROOM - "2A" LAYOUT
SCALE: 1/4" = 1'-0"

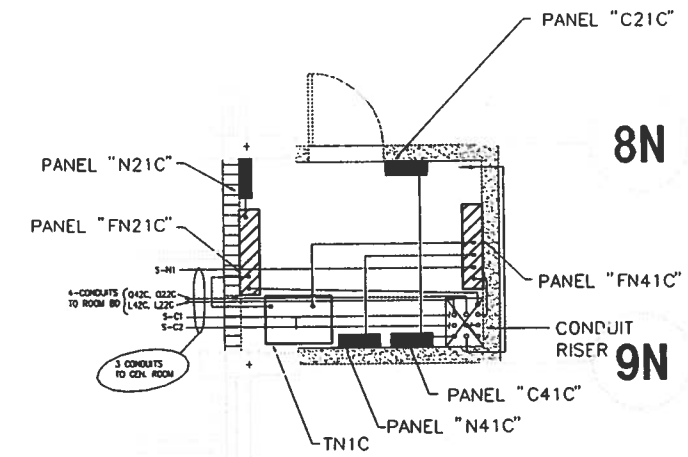

FIRST FLOOR - WING "C"
ELECTRICAL ROOM - "1C" LAYOUT
SCALE: 1/4" = 1'-0"

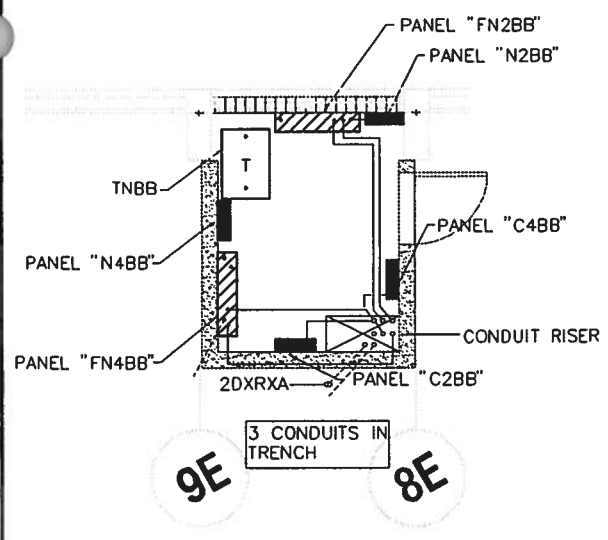

BASEMENT FLOOR - WING "B"
ELECTRICAL ROOM - "BB" LAYOUT
SCALE: 1/4" = 1'-0"

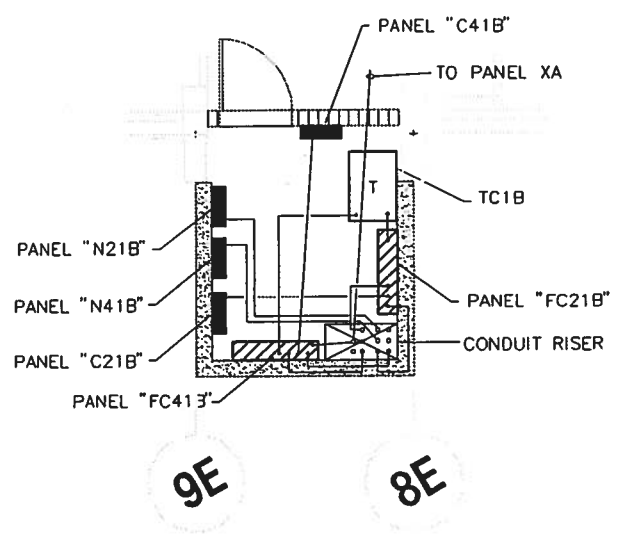

FIRST FLOOR - WING "B"
ELECTRICAL ROOM - "1B" LAYOUT
SCALE: 1/4" = 1'-0"

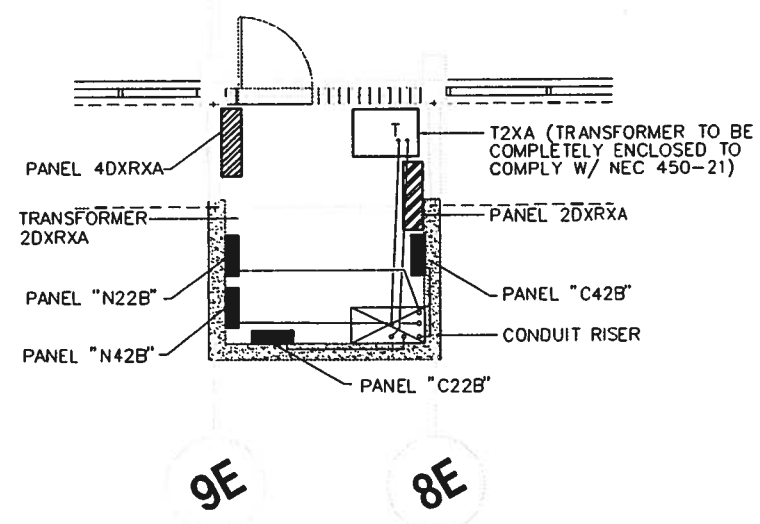

SECOND FLOOR - WING "B"
ELECTRICAL ROOM - "2B" LAYOUT
SCALE: 1/4" = 1'-0"

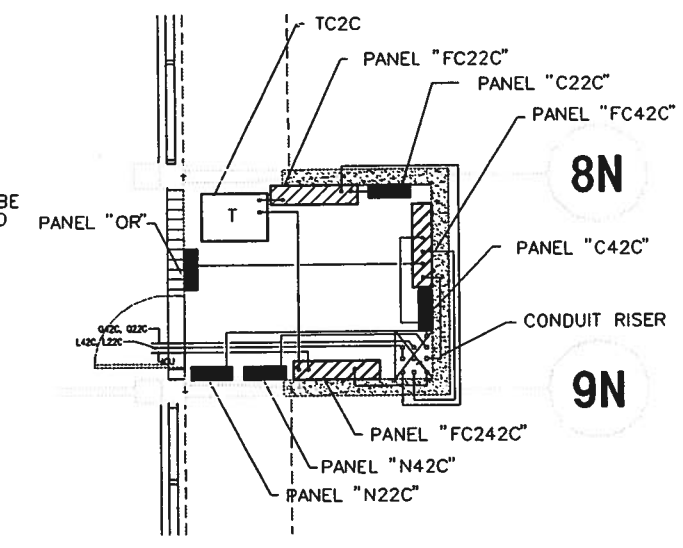

SECOND FLOOR - WING "C"
ELECTRICAL ROOM - "2C" LAYOUT
SCALE: 1/4" = 1'-0"

NOTE:
THE CONDUIT ROUTING SHOWN IS DIAGRAMMATIC ONLY. CONTRACTOR TO DETERMINE EXACT ROUTING MAY BE ABOVE OR BELOW THE FLOOR. ONLY FEEDER CONDUITS ARE SHOWN.

0 5 10 15
GRAPHIC SCALE
1/4"=1'-0"

SHERLOCK, SMITH & ADAMS, INC.
ARCHITECTS - ENGINEERS
MONTGOMERY, ALABAMA

U.S. NAVAL STATION ROOSEVELT ROADS, P.R.
REPAIRS TO NAVAL HOSPITAL
ELECTRICAL ROOM LAYOUTS - 1/4" SCALE

CONSTR. CONTR. NO.	SPECIFICATION NO.	NAVFAC DRWG. NO.	TF NO. XXXXX
XXXXX	XXXXX	XXXXX	SHEET ? OF ??

DEPARTMENT OF THE NAVY
NAVY PUBLIC WORKS CENTER, JACKSONVILLE, FL
U.S. NAVAL STATION ROOSEVELT ROADS, P.R.
REPAIRS TO NAVAL HOSPITAL
ELECTRICAL ROOM LAYOUTS - 1/4" SCALE

PLATE NO.
EP5-

PWC # XXXXX

NOTES

WHERE THE TERMS BELOW ARE USED IN PANEL SCHEDULES, SWITCHBOARD SCHEDULES, SWITCHGEAR SCHEDULES AND ELEVATIONS, AND MOTOR CONTROL CENTER SCHEDULES, THEY ARE DEFINED AS FOLLOWS:

1. SPARE – A CIRCUIT BREAKER OR MOTOR STARTER PROVIDED IN THE EQUIPMENT TO WHICH NO CIRCUIT IS CONNECTED.
   - A.) PANELBOARDS – A CIRCUIT BREAKER OF THE RATING INDICATED.
   - B.) SWITCHBOARDS – A CIRCUIT BREAKER OF THE RATING INDICATED, FURNISHED WITH SENSORS.
   - C.) SWITCHGEAR – A CIRCUIT BREAKER OF THE RATING INDICATED, FURNISHED WITH SENSORS.
   - D.) MOTOR CONTROL CENTER – A STARTER UNIT OF THE NEMA SIZE SHOWN, FURNISHED WITH CIRCUIT BREAKER AND OVERLOAD RELAYS.
2. SPACE – A FULLY BUSSED SPACE FOR A CIRCUIT BREAKER OR MOTOR STARTER OF THE SIZE NOTED, ARRANGED SO THAT THE APPROPRIATE DEVICE MAY BE INSTALLED AS FOLLOWS:
   - A.) PANELBOARD – BOLT TO PREDRILLED AND TAPPED BUS. PROVIDE BLANKING DEVICE.
   - B.) MOTOR CONTROL CENTER – STAB-IN, PROVIDE BLANK DOOR.
3. PROVISION – A COMPARTMENT IN A SWITCHBOARD OR SWITCHGEAR, DESIGNED TO ACCEPT A CIRCUIT BREAKER OF THE RATING INDICATED WITHOUT MODIFICATION TO THE BASIC COMPARTMENT.
   - A.) SWITCHBOARD – PROVISIONS TO INSTALL INDIVIDUALLY MOUNTED MOLDED CASE CIRCUIT BREAKERS BY BOLTING TO PREDRILLED AND TAPPED BUS. PROVIDE BLANKING COVER.
   - B.) LOW VOLTAGE SWITCHGEAR – COMPARTMENTS SHALL CONTAIN PRIMARY STABS, GROUNDED METAL SAFETY SHUTTERS, SECONDARY CONTACTS, DRAWOUT RAILS, SMALL WIRING AND ALL OTHER DEVICES REQUIRED TO ACCOMODATE A FUTURE LOW VOLTAGE DRAW-OUT AIR CIRCUIT BREAKER OF THE RATING INDICATED. PROVIDE A BLANK COVER.
4. ALL BREAKERS TO BE 3 POLE UNLESS NOTED OTHERWISE. FOR SPARES AND SPACES SEE PANEL SCHEDULES.
5. ALL TRANSFORMERS TO BE 480 DELTA PRIMARY, 208V/120Y SECONDARY UNLESS NOTED OTHERWISE. NOTE THAT IN SOME CASES THE K-RATING CAUSES THE PHASE CONDUCTORS TO BE OVERSIZED (SECONDARY NEUTRAL CONDUCTORS ARE ALWAYS OVERSIZED).
6. ALL NEW BREAKERS ONLY IN DISTRIBUTION PANELS 70A AND ABOVE SHALL HAVE ADJUSTABLE INSTANTANEOUS TRIP. ALL BREAKERS IN LIGHTING AND APPLIANCE PANELS 70A AND ABOVE WHICH FEED TRANSFORMERS SHALL BE SUB-FEED TYPE WITH ADJUSTABLE INSTANTANEOUS TRIP. BREAKERS SHOWN TO HAVE SOLID STATE TRIP SHALL HAVE AS MANY FUNCTIONS AS REQUIRED TO ACHIEVE PROPER COORDINATION. THIS SHALL BE DETERMINED BY THE CONTRACTOR AND A COORDINATION STUDY/SHORT CIRCUIT STUDY SHALL BE SUBMITTED FOR APPROVAL. THIS STUDY SHALL INCLUDE EXISTING BREAKER.
7. ALL 208V PANELS EXCEPT LIFE SAFETY & EQUIPMENT SHALL HAVE NEUTRAL BARS SIZED AT A MINIMUM OF 1.73 TIMES THE RATING OF THE PANEL AND BE EQUIPPED WITH PROVISIONS TO CONNECT SEPARATE NEUTRALS FOR EACH BAR.
8. SEE TABLES ON SHEET E00-3 FOR FEEDER SIZES.
9. CONNECT NEUTRAL CONDUCTOR AND GROUND CONDUTOR TO A GROUNDING ELECTRODE IN EACH OUTLYING BUILDING PER N.E.C.
10. CONTRACTOR SHALL PROVIDE PANELBOARD BONDING AS INDICATED IN NEC 517-14 FOR ALL ELECTRICAL PANELBOARDS ON THE BASEMENT, 1ST AND 2ND FLOORS OF THE HOSPITAL AS REQUIRED.
11. SEE SHEET EP7-3 FOR MIN. CONTINUOUS CURRENT RATING OF ALL AUTOMATIC TRANSFER SWITCHES.
12. PROVIDE MICARTA NAMEPLATES FOR EACH ADJUSTABLE TRIP CIRCUIT BREAKER WITH BREAKER NUMBER, LOAD AND ALL SETTINGS ENGRAVED IN NAMEPLATE.
13. TEST GROUND FAULT PROTECTION AS REQUIRED BY NEC 517-17.
14. PROVIDE A SHORT CIRCUIT/COORDINATION STUDY (SEE SPECIFICATION SECTION ___ FOR DETAILS).

LEGEND

SYMBOLS USED IN LOW VOLTAGE SINGLE LINE DIAGRAMS

- LOW VOLTAGE POWER DRAWOUT AIR CIRCUIT BREAKER WITH SOLID STATE TRIPPING DEVICES.
- LOW VOLTAGE INSULATED CASED CIRCUIT BREAKER WITH SOLID STATE TRIPPING DEVICES.
- FIXED INSULATED CASE CIRCUIT BREAKER WITH SOLID STATE TRIPPING DEVICES, SYMBOL WITH "E" INDICATES ELECTRICALLY OPERATED.
- MOLDED CASE CIRCUIT BREAKER WITH THERMAL-MAGNETIC TRIPS. SEE NOTE 6 ON THIS SHEET
- GROUND CURRENT SENSOR
- GFR – GROUND FAULT RELAY
- GFS – GROUND FAULT SENSOR – PROVIDE ALARM (NOT TRIP) AS DETAILED ON SHEET EP7-4.
- A – AMMETER
- V – VOLTMETER
- S – AMMETER OR VOLTMETER PHASE SELECTOR SWITCH
- CT – CURRENT TRANSFORMER, RATIO AS SHOWN.
- KW/D – KILOWATT METER WITH DEMAND HAND
- SURGE ARRESTER
- C – CONTACTOR, ELECTRICALLY OPERATED, MECHANICALLY HELD
- AUTOMATIC TRANSFER SWITCH.
- AUTOMATIC TRANSFER SWITCH WITH BYPASS ISOLATIONS.
- 27 – UNDERVOLTAGE RELAY – DEVICE 27
- EX – EXISTING
- FEEDER SIZE, SEE TABLE, REFER TO SHEET E00-3
- SURGE AND TRANSIENT VOLTAGE PROTECTOR.

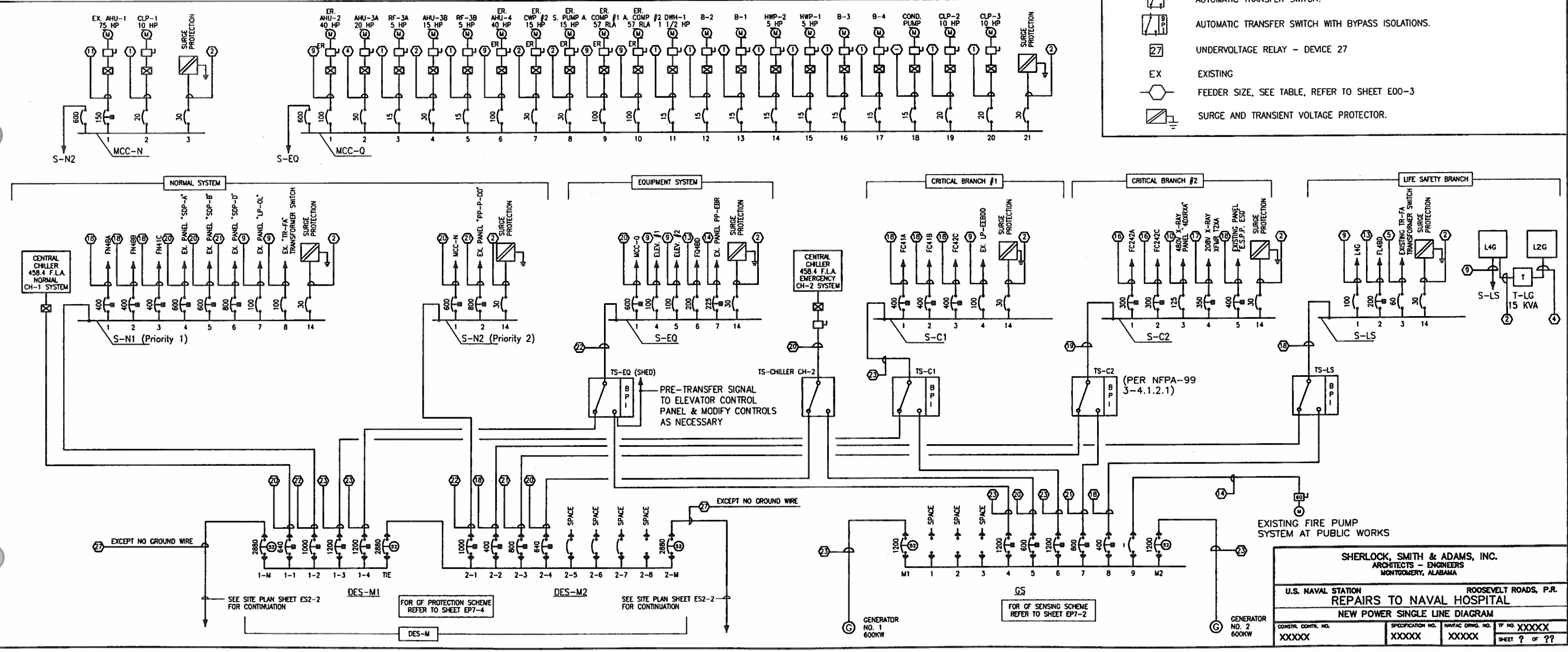

SHERLOCK, SMITH & ADAMS, INC.
ARCHITECTS – ENGINEERS
MONTGOMERY, ALABAMA

U.S. NAVAL STATION ROOSEVELT ROADS, P.R.
REPAIRS TO NAVAL HOSPITAL
NEW POWER SINGLE LINE DIAGRAM

CONSTR. CONTR. NO.	SPECIFICATION NO.	NAVFAC DRWG. NO.	TF NO. XXXXX
XXXXX	XXXXX	XXXXX	SHEET ? OF ??

SEAL AREA

DIV. OV. DR.: DATE SATISFACTORY TO: DATE

REVISION DESCRIPTION	DATE

NAVAL FACILITIES ENGINEERING COMMAND
DEPARTMENT OF THE NAVY
NAVY PUBLIC WORKS CENTER, JACKSONVILLE, FL
U.S. NAVAL STATION ROOSEVELT ROADS, P.R.
REPAIRS TO NAVAL HOSPITAL
NEW POWER SINGLE LINE DIAGRAM

PLATE NO. EP6-

PWC # XXXXX

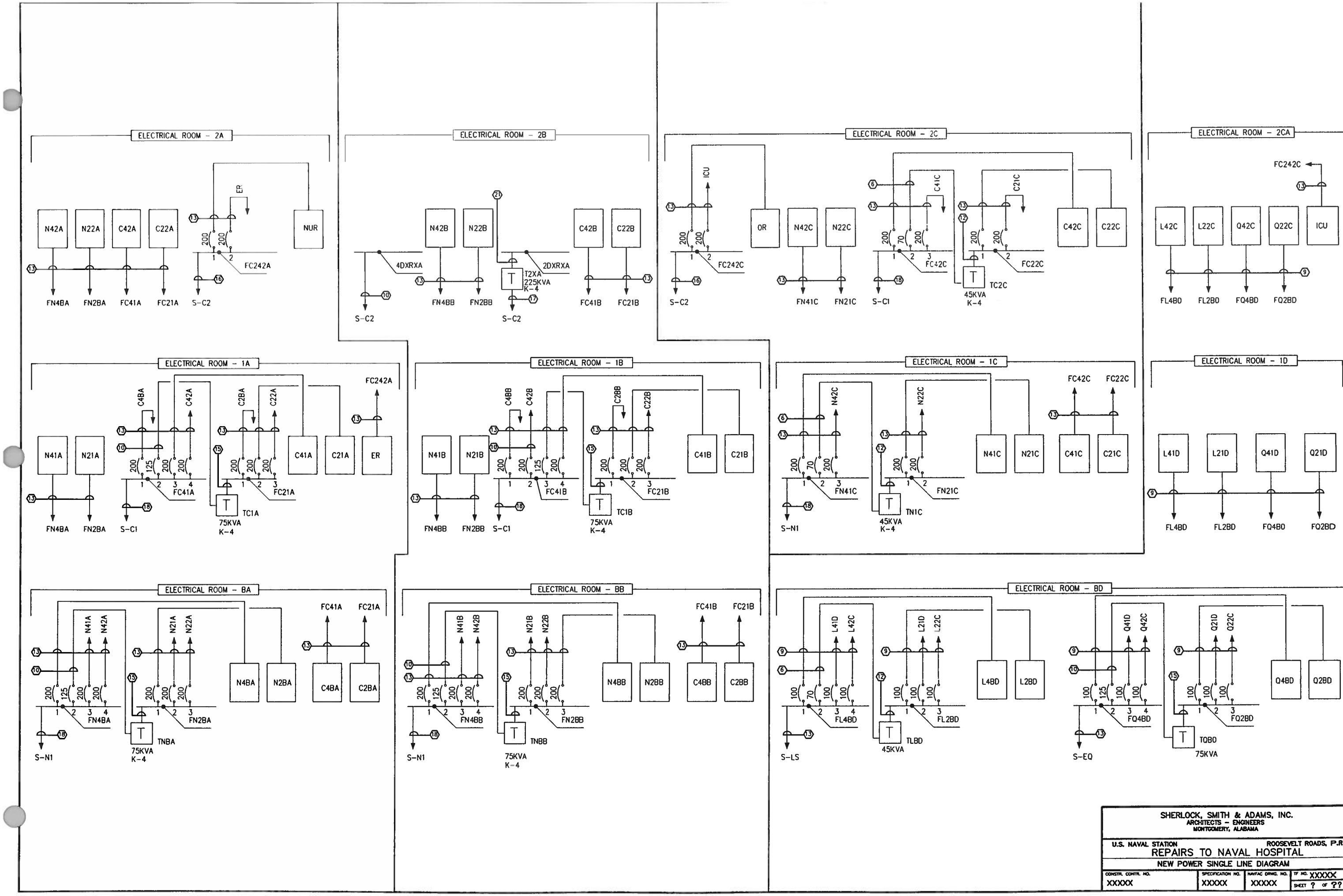

SHERLOCK, SMITH & ADAMS, INC.
ARCHITECTS – ENGINEERS
MONTGOMERY, ALABAMA

U.S. NAVAL STATION ROOSEVELT ROADS, P.R.
REPAIRS TO NAVAL HOSPITAL
NEW POWER SINGLE LINE DIAGRAM

CONSTR. CONTR. NO.	SPECIFICATION NO.	NAVFAC DRWG. NO.	TF NO. XXXXX
XXXXX	XXXXX	XXXXX	SHEET ? OF ??

DEPARTMENT OF THE NAVY
NAVY PUBLIC WORKS CENTER, JACKSONVILLE, FL
NAVAL FACILITIES ENGINEERING COMMAND

U.S. NAVAL STATION ROOSEVELT ROADS, P.R.
REPAIRS TO NAVAL HOSPITAL
NEW POWER SINGLE LINE DIAGRAM

PLATE NO.
EP6-2

PWC # XXXXX

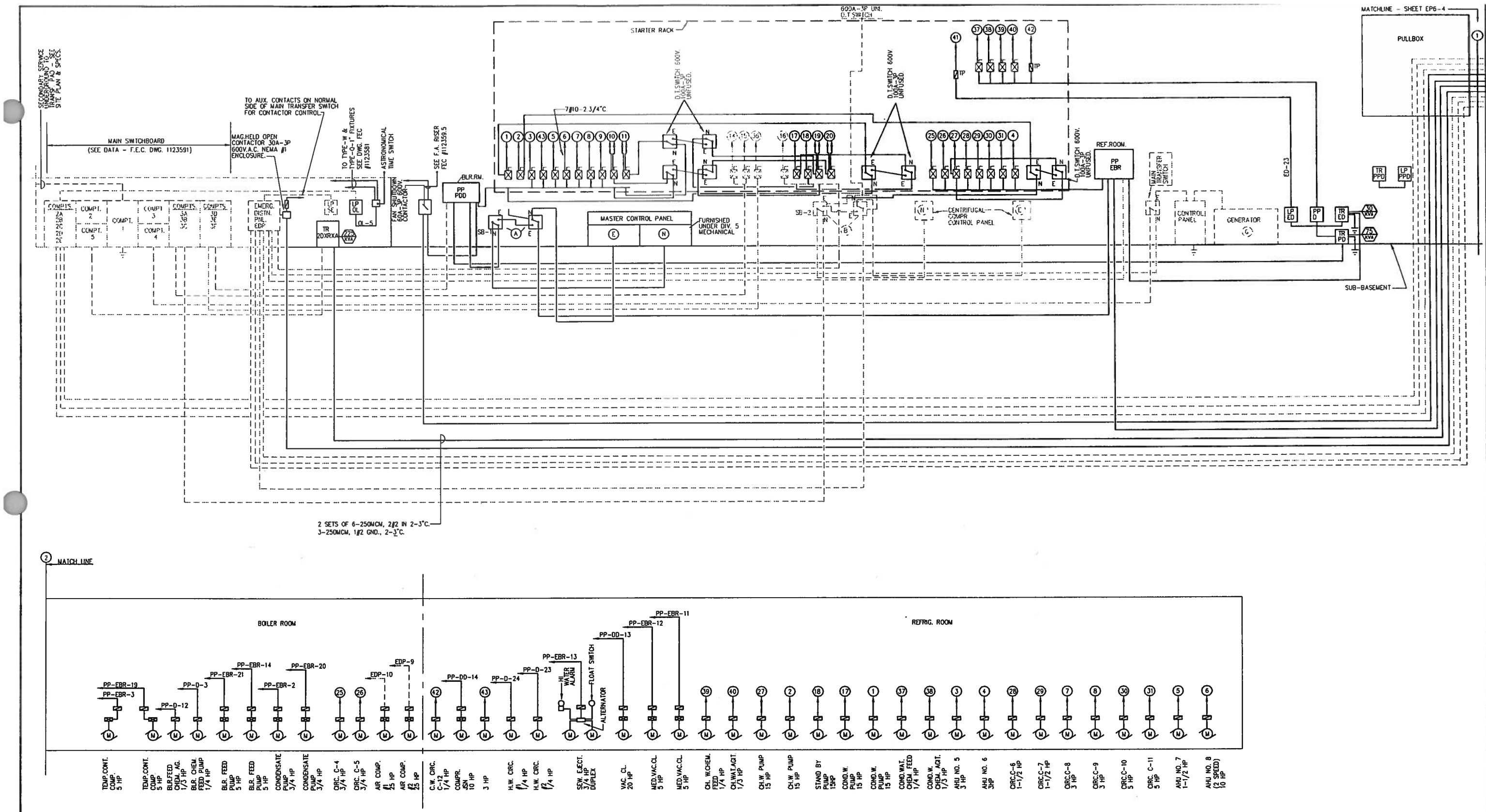

LEGEND

EXISTING TO REMAIN ————————

EXISTING TO BE REMOVED - - - - - - - - - - -

DEMOLITION POWER SINGLE LINE DIAGRAM - PART A

SCALE: NOT TO SCALE

SHERLOCK, SMITH & ADAMS, INC.
ARCHITECTS - ENGINEERS
MONTGOMERY, ALABAMA

U.S. NAVAL STATION ROOSEVELT ROADS, P.R.
REPAIRS TO NAVAL HOSPITAL
DEMOLITION POWER SINGLE LINE DIAGRAM - PART A

CONSTR. CONTR. NO.	SPECIFICATION NO.	NAVFAC DRWG. NO.	TF NO. XXXXX
XXXXX	XXXXX	XXXXX	SHEET ? OF ??

DEPARTMENT OF THE NAVY
NAVY PUBLIC WORKS CENTER, JACKSONVILLE, FL
NAVAL FACILITIES ENGINEERING COMMAND

U.S. NAVAL STATION ROOSEVELT ROADS, P.R.
REPAIRS TO NAVAL HOSPITAL
DEMOLITION POWER SINGLE LINE DIAGRAM -

REVISION DESCRIPTION | DATE | ENG. DIV. DR.: | DATE | SATISFACTORY TO: | DATE:

PLATE NO.
EP6-3

PWC # XXXXX

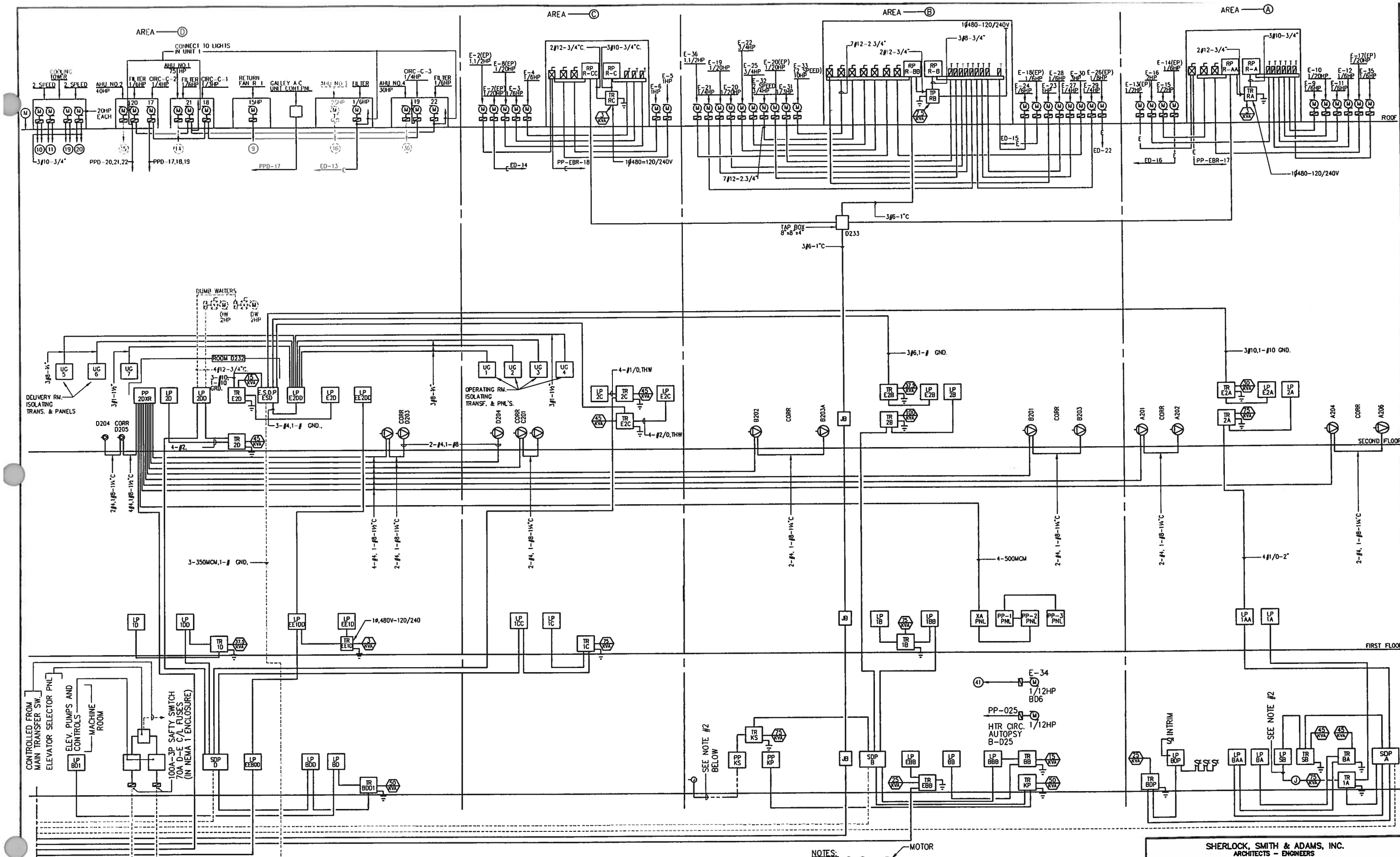

LEGEND

EXISTING TO REMAIN ————

EXISTING TO BE REMOVED - - - - - -

DEMOLITION POWER SINGLE LINE DIAGRAM - PART B

SCALE: NOT TO SCALE

NOTES:

1. INDICATES CONDUIT & WIRING CONNECTIONS (BRANCH CIRCUIT CONNECTION BETWEEN MOTOR CONTROLLER AND MOTOR DISCONNECT SWITCH). (MOTOR)
2. CONTROL WIRING IN CONDUIT FROM CO2 SYSTEM PRESSURE SWITCH. REFER TO F.E.C. DWG. NOS. 1123599 AND 1123600.
3. FOR CONDUIT & WIRE SIZES REFER TO F.E.C. DWG. NO. 1123591.

SHERLOCK, SMITH & ADAMS, INC.
ARCHITECTS - ENGINEERS
MONTGOMERY, ALABAMA

U.S. NAVAL STATION ROOSEVELT ROADS, P.R.
REPAIRS TO NAVAL HOSPITAL
DEMOLITION POWER SINGLE LINE DIAGRAM - PART B

CONSTR. CONTR. NO.	SPECIFICATION NO.	NAVFAC DRWG. NO.	TF NO. XXXXX
XXXXX	XXXXX	XXXXX	SHEET ? OF ??

DEPARTMENT OF THE NAVY
NAVY PUBLIC WORKS CENTER, JACKSONVILLE, FL
NAVAL FACILITIES ENGINEERING COMMAND

U.S. NAVAL STATION ROOSEVELT ROADS, P.R.
REPAIRS TO NAVAL HOSPITAL
DEMOLITION POWER SINGLE LINE DIAGRAM

PLATE NO. EP6-4

PWC # XXXXX

CIRCUIT BREAKER SCHEDULE–SWITCHGEAR GS (GENERATOR SWITCHGEAR)

DESIGNATION 52	SERVES	FRAME AMPS	POLES	MIN. SYM INT. RATING @ 480V AC AMPS x 1000	SENSOR RATING	RATING PLUG. CURR. RATING	RATING PLUG. CURR. SETTING	TRIP AMPS	OPERATION 120 VOLT AC ELECTRIC	OPERATION 120 VOLT AC MANUAL	TRIPPING DEVICES LONG DELAY	TRIPPING DEVICES SHORT DELAY	TRIPPING DEVICES INSTANTANEOUS	TRIPPING DEVICES GROUND FAULT	TRIPPING DEVICES SHUNT TRIP	"a" CONTACTS TOTAL	"b" CONTACTS TOTAL	BELL ALARM CONTACT	REMARKS	DESIGNATION 52
M1	MAIN GENERATOR NO. 1	2000	3	17.7	2000	2000	0.6	1200	•	—	•	•	—	NOTE 2	—	8	4	•	NOTES 2,7	MG–1
1	SPACE	—	–	–	—	—	—	—	•	—	•	•	•	—	—	4	4	•	NOTE 8	1
2	SPACE	—	–	–	—	—	—	—	•	—	•	•	•	—	—	4	4	•	NOTES 1,4,5,8	2
3	SPACE	—	–	–	—	—	—	—	•	—	•	•	•	—	—	4	4	•	NOTE 8	3
4	TS–EQ (S–EQ)	2000	3	17.7	2000	2000	0.6	1200	•	—	•	•	•	—	—	4	4	•	NOTE 8	4
5	CHILLER EM. (CH–2)	1600	3	17.7	800	800	0.8	640	•	—	•	•	•	—	—	4	4	•	NOTE 8	5
6	TS–C1 (S–C1)	2000	3	17.7	2000	2000	0.6	1200	•	—	•	•	•	—	—	4	4	•	NOTE 8	6
7	TS–C2 (S–C2)	1600	3	17.7	1600	1600	0.5	800	•	—	•	•	•	—	—	4	4	•	NOTE 8	7
8	TS–LS (S–LS)	800	3	17.7	800	800	0.5	400	•	—	•	•	•	—	—	4	4	•	NOTE 8	8
9	FIRE PUMP SYSTEM	800	3	17.7	800	800	0.5	400	—	—	—	—	—	—	—	—	—	—	NOTE 1,8	–
M2	GENERATOR NO. 2	2000	3	17.7	2000	2000	0.6	1200	•	—	•	•	•	NOTE 2	—	4	4	•	NOTE 2,7	9

NOTES:

1. FIRE PUMP SYSTEM IS LOCATED AT THE PUBLIC WORKS BUILDING, THIS SYSTEM DOES NOT SERVE THIS HOSPITAL.
2. PROVIDE GROUND FAULT SENSOR FOR GROUND FAULT INDICATION, (NOT TRIPPING) PER N.E.C. ARTICLE 700–7d. SEE DETAILS AND WIRING DIAGRAM, SH. NO. EP7–2.
3. NOT USED.
4. FIXED INSTANTANEOUS TRIP – 15X.
5. PROVIDE CIRCUIT BREAKER INFORMATION MONITORING SYSTEM COMPUTER AND DISPLAY TO MONITOR EACH BREAKER IN THE SWITCHGEAR. SEE SPECIFICATIONS FOR REQUIREMENTS. SOME OF THE ITEMS TO BE MONITORED FOR EACH BREAKER INCLUDE AMPS, VOLTS, KW, KVA, P.F., HISTORY OF TRIPS ON BREAKER, HISTORY OF PEAK CURRENT, AND K.W. FOR EACH BREAKER.
6. NOT USED.
7. DRAWOUT AIR CIRCUIT BREAKER.
8. INSULATED/MOLDED CASE CIRCUIT BREAKER – DRAWOUT TYPE.

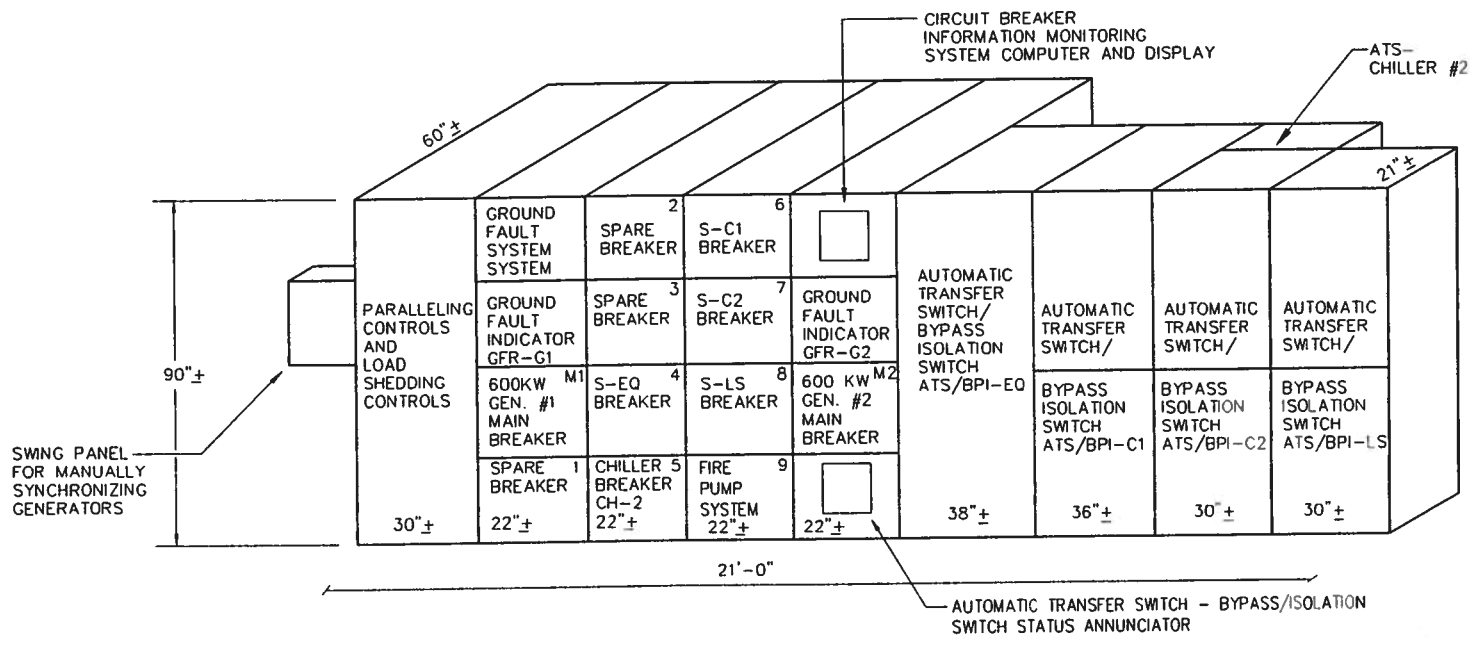

GENERATOR SWITCHGEAR (GS)/AUTOMATIC TRANSFER SWITCHES

ELEVATION

NO SCALE

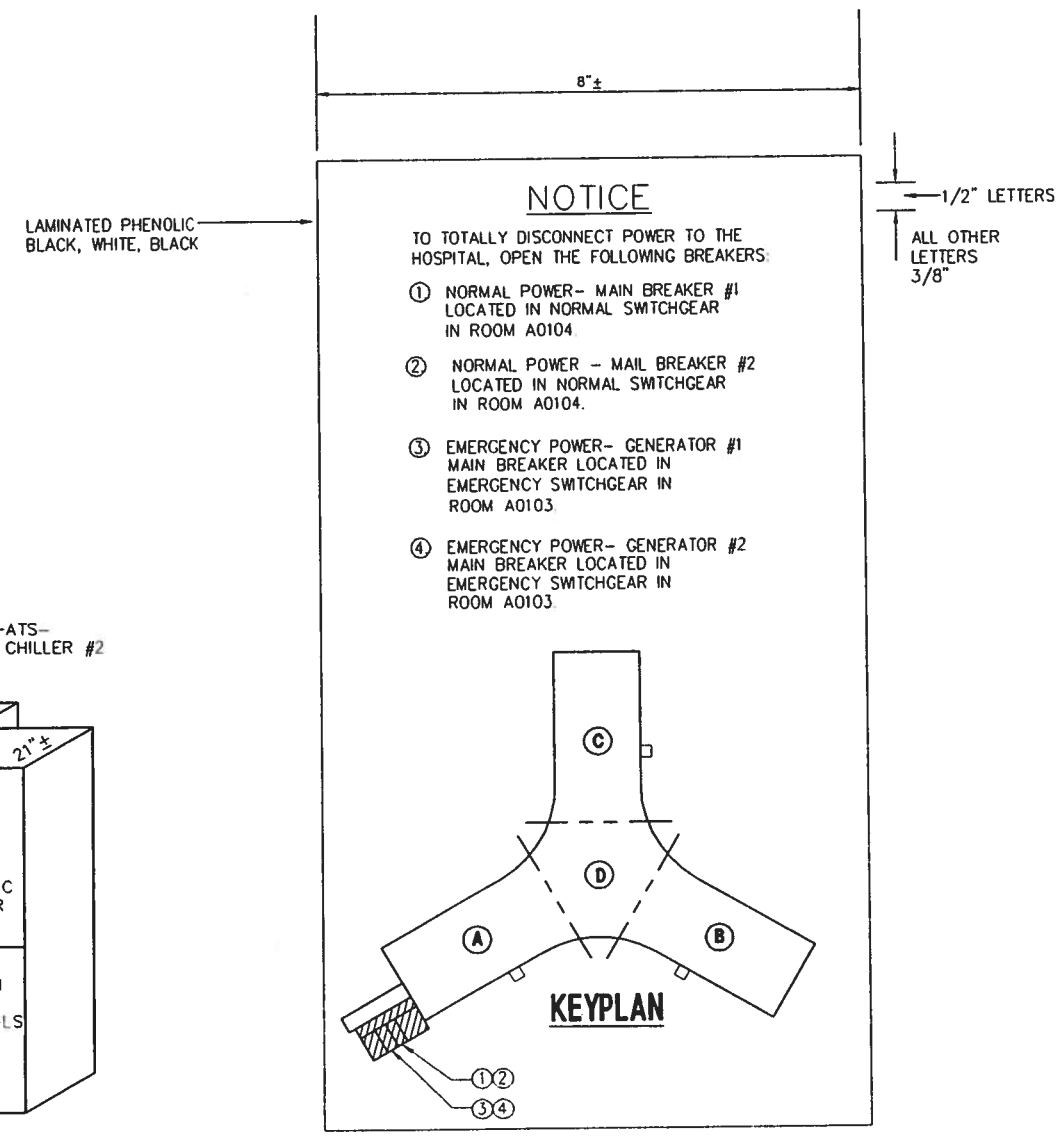

DETAIL

"NOTICE" SIGN TO BE PLACED ON DES–M AND G–S PER NEC ARTICLE 700 – 8

SHERLOCK, SMITH & ADAMS, INC.
ARCHITECTS – ENGINEERS
MONTGOMERY, ALABAMA

U.S. NAVAL STATION ROOSEVELT ROADS, P.R.
REPAIRS TO NAVAL HOSPITAL
GENERATOR SWITCHGEAR "GS" DETAILS AND ELEVATION

CONSTR. CONTR. NO.	SPECIFICATION NO.	NAVFAC DRWG. NO.	TF NO. XXXXX
XXXXX	XXXXX	XXXXX	SHEET ? OF ??

SEAL AREA

ENG. DIV. DIR.: DATE:
SATISFACTORY TO: DATE:
DESIGN BY: SWA DRAWN BY: CBN
CHK BY: RES APPROVED:

REVISION DESCRIPTION	DATE

DEPARTMENT OF THE NAVY
NAVAL FACILITIES ENGINEERING COMMAND
NAVY PUBLIC WORKS CENTER, JACKSONVILLE, FL
U.S. NAVAL STATION ROOSEVELT ROADS, P.R.
REPAIRS TO NAVAL HOSPITAL
GENERATOR SWITCHGEAR "GS" DETAILS AND ELEVATION

NAVFAC DWG. NO. XXXXX PWC DWG. NO. XXXXX
PWCTR DWG. NO. YYYYY

PLATE NO.
EP7-1