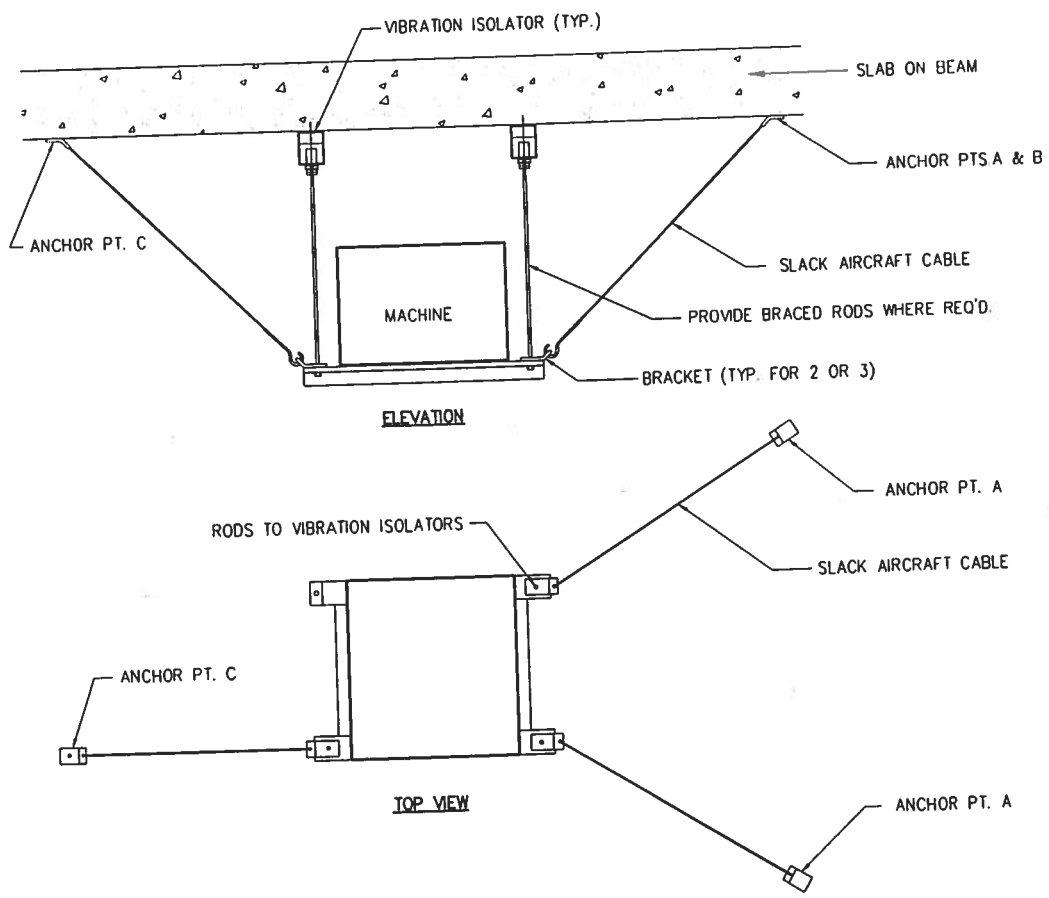

LATERAL RESTRAINT OF SUSPENDED EQUIPMENT (1 / TYP. M7-6)
NOT TO SCALE

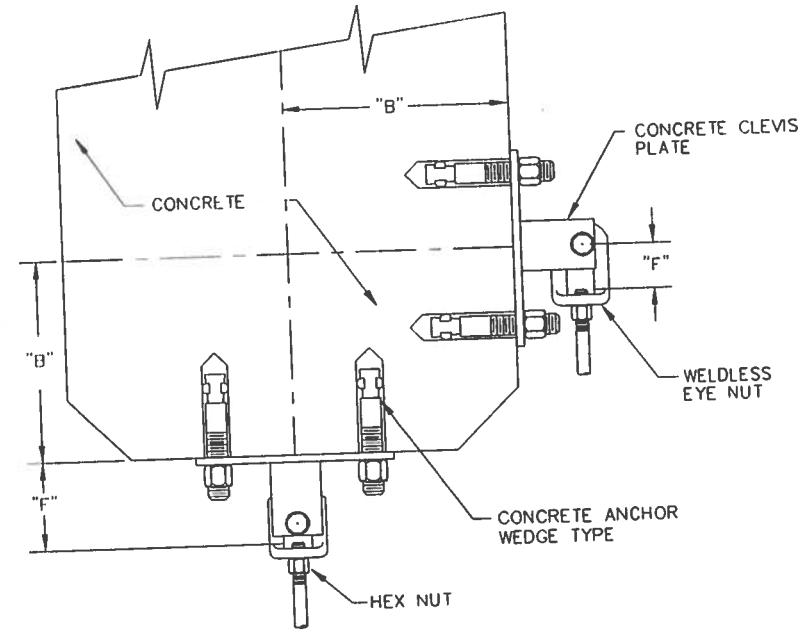

CONCRETE CLEVIS PLATE (2 / TYP. M7-6)
NOT TO SCALE

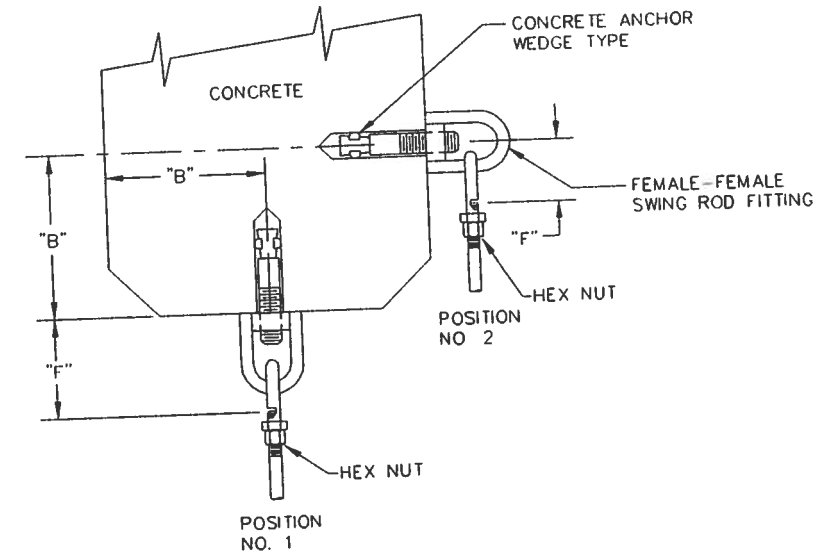

CONCRETE EXPANSION ANCHOR (3 / TYP. M7-6)
NOT TO SCALE

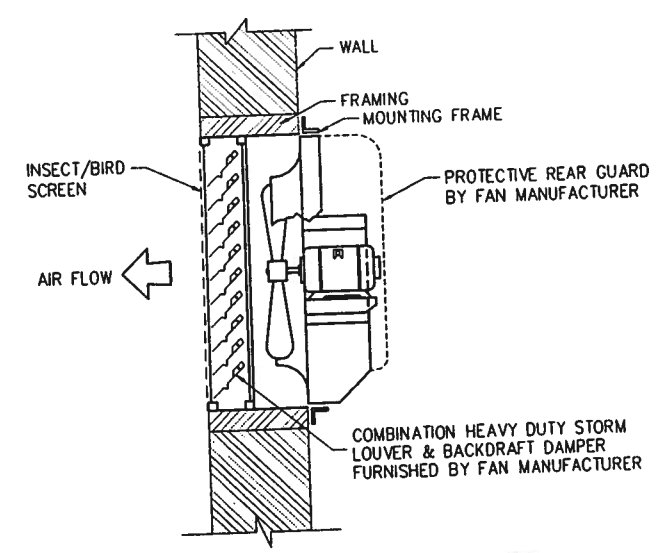

WALL MOUNTED PROPELLER FAN (4 / M3-1 M2-1 M2-2 / M7-6)
NOT TO SCALE

REVISION DESCRIPTION	DATE	ENG. DIV. DIR.:	DATE	SATISFACTORY TO:	DATE:	DESIGN BY: DUFFEE	DRAWN BY: TAYLOR

NAVAL FACILITIES ENGINEERING COMMAND
DEPARTMENT OF THE NAVY
NAVY PUBLIC WORKS CENTER, JACKSONVILLE, FL
U.S. NAVAL STATION ROOSEVELT ROADS, P.R.
REPAIRS TO NAVAL HOSPITAL
DETAILS

SHERLOCK, SMITH & ADAMS, INC.
ARCHITECTS – ENGINEERS
MONTGOMERY, ALABAMA

U.S. NAVAL STATION ROOSEVELT ROADS, P.R.
REPAIRS TO NAVAL HOSPITAL
DETAILS

CONSTR. CONTR. NO.	SPECIFICATION NO.	NAVFAC DRWG. NO.	TF NO. XXXXX
XXXXX	XXXXX	XXXXX	SHEET ? OF ??

PLATE NO. M7-6

PWC # XXXXX

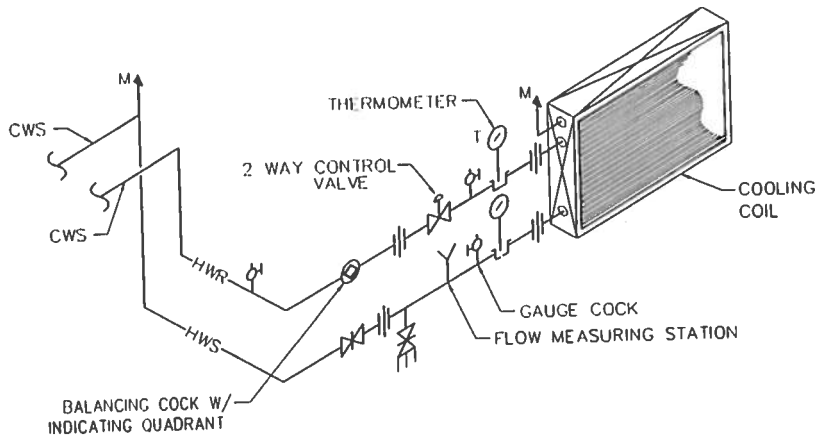

CHILLED WATER COIL PIPING (1) TYP. M7-7

NOT TO SCALE

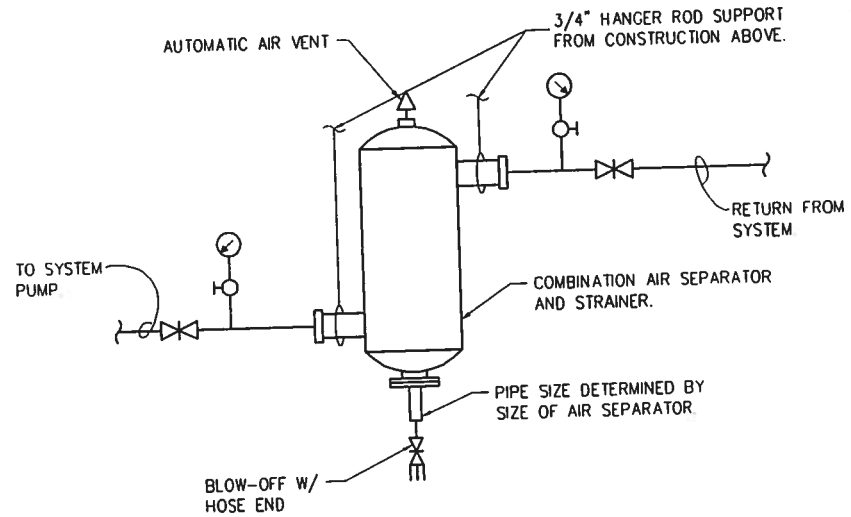

AIR SEPARATOR PIPING (2) M6-1 M6-2 M7-7

NOT TO SCALE

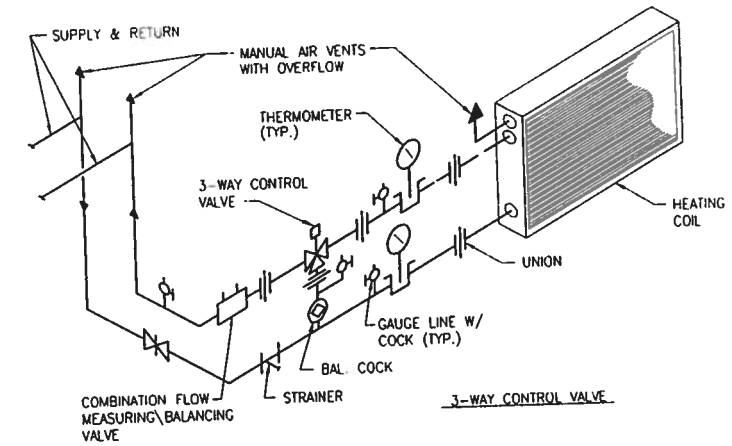

HOT WATER COIL PIPING (3) TYP. M7 7

NOT TO SCALE

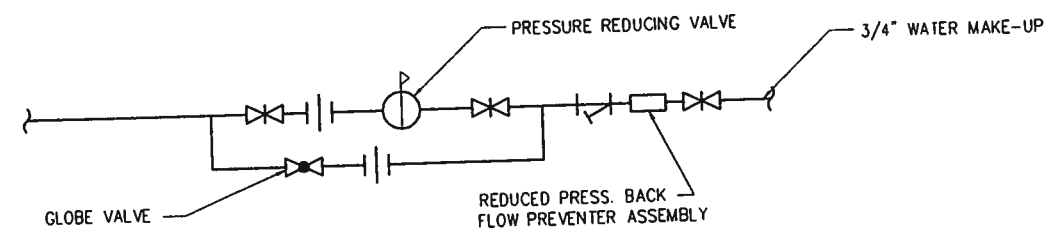

WATER MAKE-UP ASSEMBLY (2A) TYP. M7-7

NOT TO SCALE

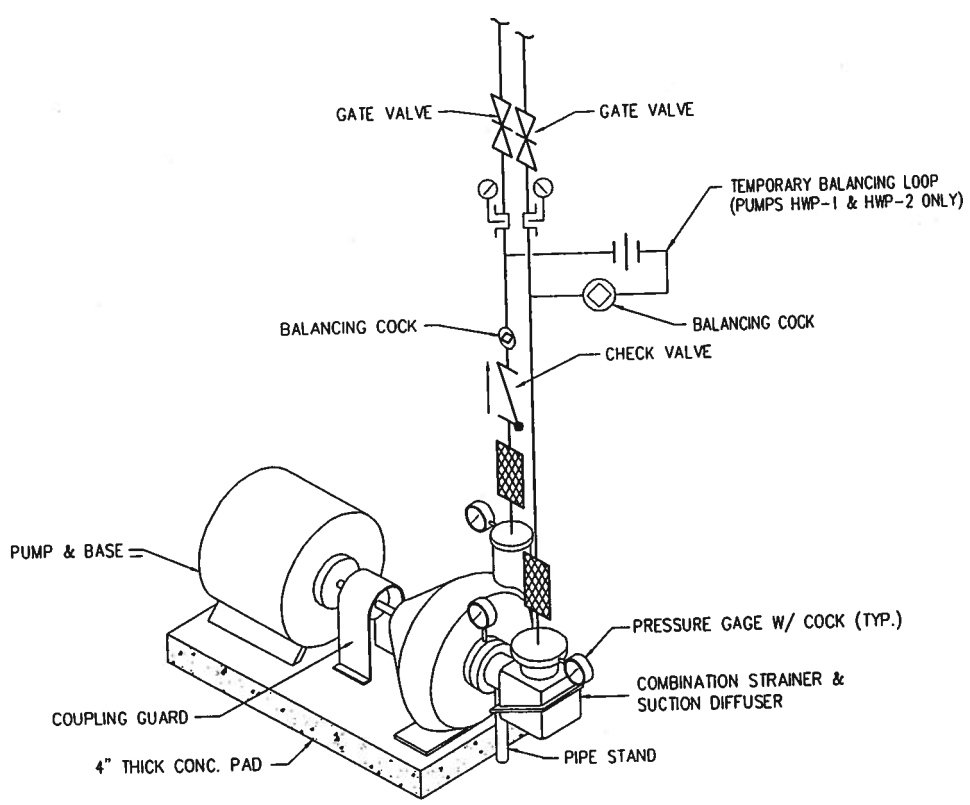

PUMP PIPING (4) M3-2 M3-3 M6-2 M7-7

NOT TO SCALE

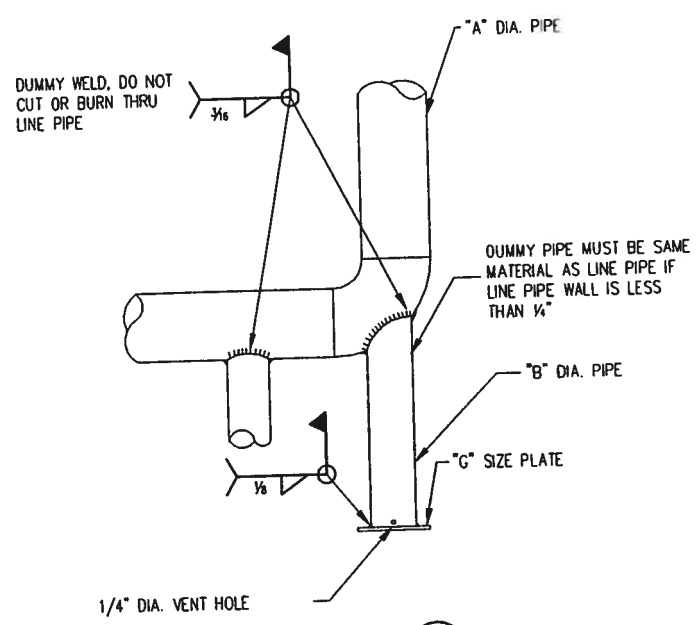

FIXED PIPE SUPPORT (5) TYP. M7-7

NOT TO SCALE

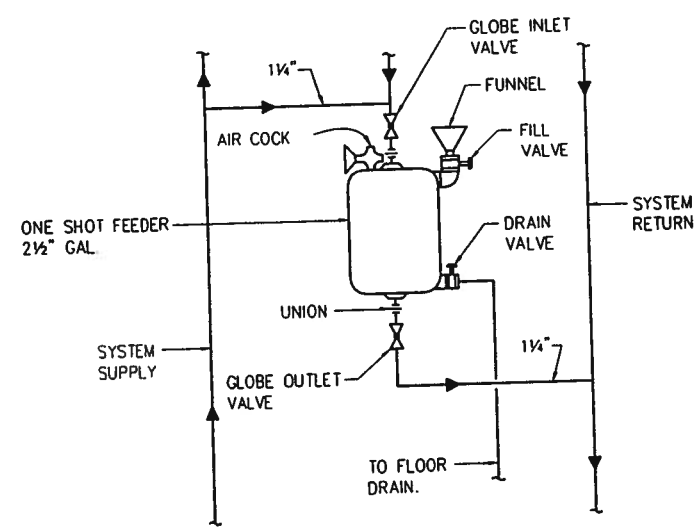

ONE SHOT FEEDER PIPING (6) M6-2 M7-7

NOT TO SCALE

NOTE: SEE PLAN FOR PIPE SIZES.

SHERLOCK, SMITH & ADAMS, INC.
ARCHITECTS – ENGINEERS
MONTGOMERY, ALABAMA

U.S. NAVAL STATION ROOSEVELT ROADS, P.R.
REPAIRS TO NAVAL HOSPITAL
DETAILS

CONSTR. CONTR. NO.	SPECIFICATION NO.	NAVFAC DRWG. NO.	TF NO. XXXXX
XXXXX	XXXXX	XXXXX	SHEET ? OF ??

DESIGN BY: DUFFEE DRAWN BY: TAYLOR

DWG. ON DAY: DATE SATISFACTORY TO: DATE:

REVISION DESCRIPTION DATE

NAVAL FACILITIES ENGINEERING COMMAND
DEPARTMENT OF THE NAVY
NAVY PUBLIC WORKS CENTER, JACKSONVILLE, FL
U.S. NAVAL STATION ROOSEVELT ROADS, P.R.
REPAIRS TO NAVAL HOSPITAL
DETAILS

PLATE NO. M7-7

PWC # XXXXX

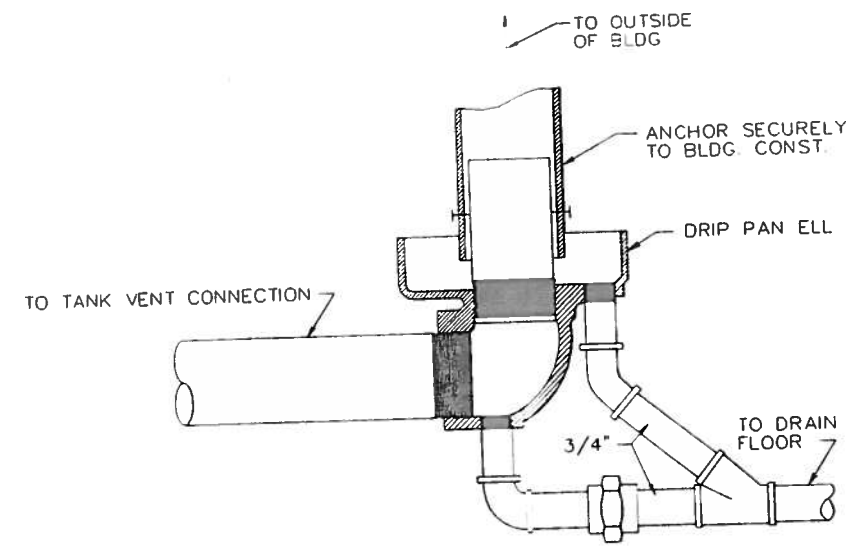

STEAM VALVE AND VENT DRIP PAN ELL (2)
NOT TO SCALE
M3-3 | M7-8
M4-3

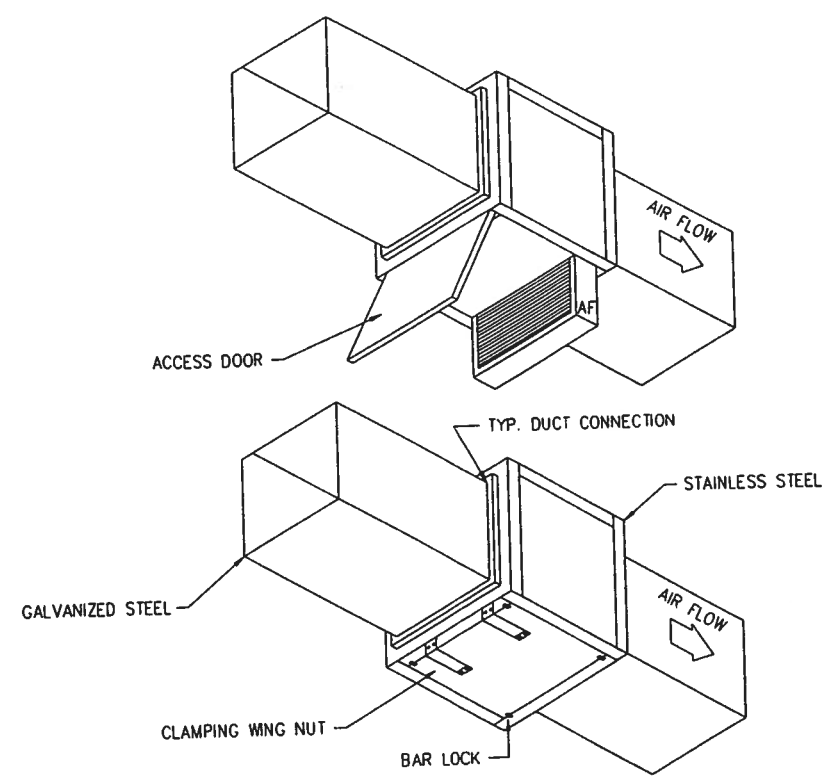

DUCT MOUNTED FILTER (4)
NOT TO SCALE
M2-1 | M7-8
M2-2
M2-3

SD-436

SHERLOCK, SMITH & ADAMS, INC.
ARCHITECTS – ENGINEERS
MONTGOMERY, ALABAMA

U.S. NAVAL STATION ROOSEVELT ROADS, P.R.
REPAIRS TO NAVAL HOSPITAL
DETAILS

CONSTR. CONTR. NO.	SPECIFICATION NO.	NAVFAC DRWG. NO.	TF NO. XXXXX
XXXXX	XXXXX	XXXXX	SHEET ? OF ??

DEPARTMENT OF THE NAVY
NAVAL FACILITIES ENGINEERING COMMAND
NAVY PUBLIC WORKS CENTER, JACKSONVILLE, FL
U.S. NAVAL STATION ROOSEVELT ROADS, P.R.
REPAIRS TO NAVAL HOSPITAL
DETAILS

PLATE NO. M7-

PWC # XXXX

REVISION DESCRIPTION	DATE

ENG. DIV. DR. ____ DATE ____
SATISFACTORY TO ____ DATE ____
DESIGN BY: DUFFEE DRAWN BY: TAYLOR

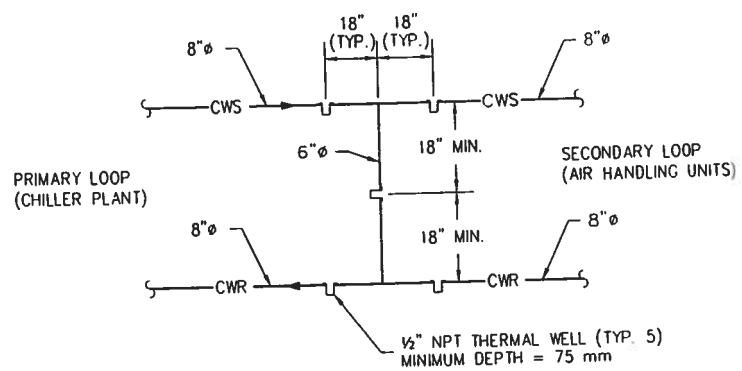

DECOUPLER PIPING (1) M-3|M7-9
NOT TO SCALE

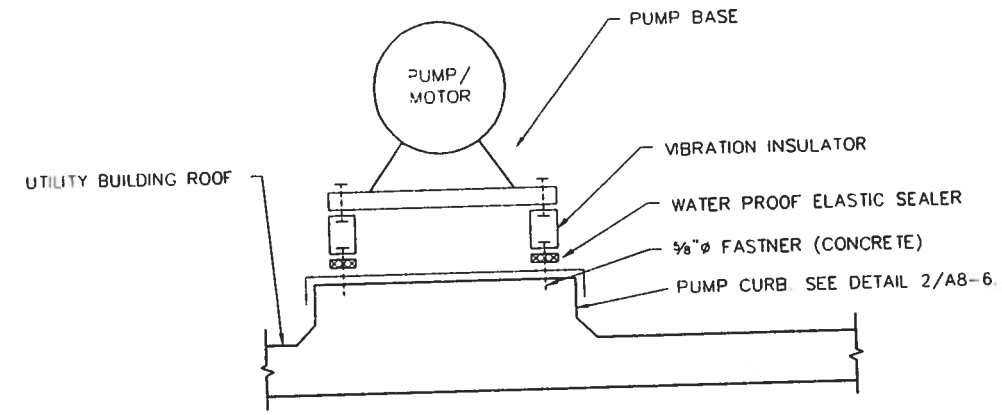

PUMP BASE – UTILITY BUILDING ROOF (2) M3-3|M7-9
NOT TO SCALE

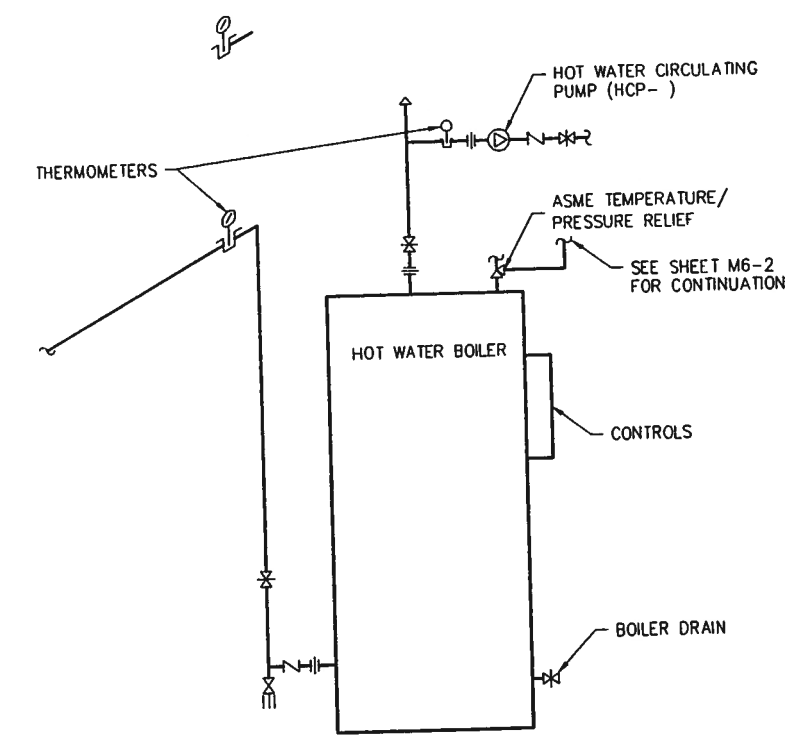

HOT WATER HEATING BOILER PIPING (5) TYP.|M7-9
NOT TO SCALE

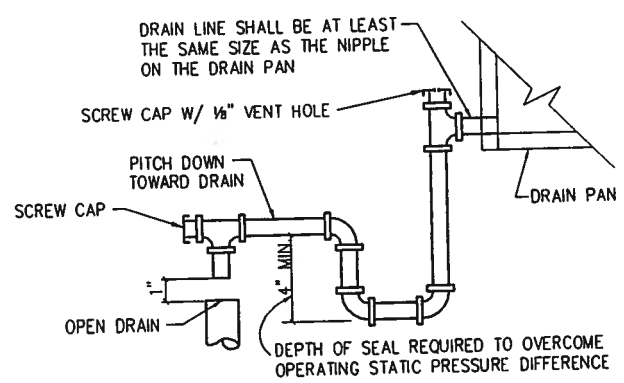

NOT TO SCALE

NOTE:
DRAIN LINE SHALL BE INSULATED

CONDENSATE DRAIN TRAP (3) M4-1 M4-2 M7-9

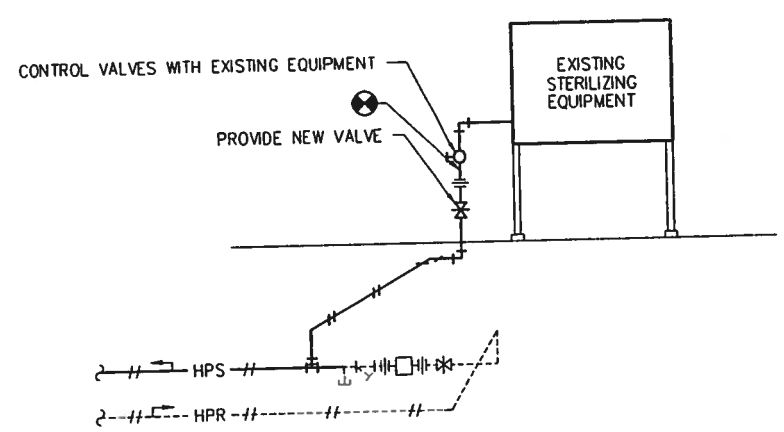

HIGH PRESSURE STEAM/CONDENSATE PIPING (4) TYP.|M7-9
NOT TO SCALE

SHERLOCK, SMITH & ADAMS, INC.
ARCHITECTS – ENGINEERS
MONTGOMERY, ALABAMA

U.S. NAVAL STATION ROOSEVELT ROADS, P.R.
REPAIRS TO NAVAL HOSPITAL
DETAILS

CONSTR. CONTR. NO.	SPECIFICATION NO.	NAVFAC DRWG. NO.	TF NO. XXXXX
XXXXX	XXXXX	XXXXX	SHEET ? OF ??

DEPARTMENT OF THE NAVY
NAVAL FACILITIES ENGINEERING COMMAND
NAVY PUBLIC WORKS CENTER, JACKSONVILLE, FL
ROOSEVELT ROADS, P.R.
U.S. NAVAL STATION
REPAIRS TO NAVAL HOSPITAL
DETAILS

PLATE NO.
M7-9

PWC # XXXXX

REVISION DESCRIPTION	DATE
DIG. DIV. DR.	
DATE	
SATISFACTORY TO	
DATE	

DESIGN BY: JULIEFF DRAWN BY: TAYLOR

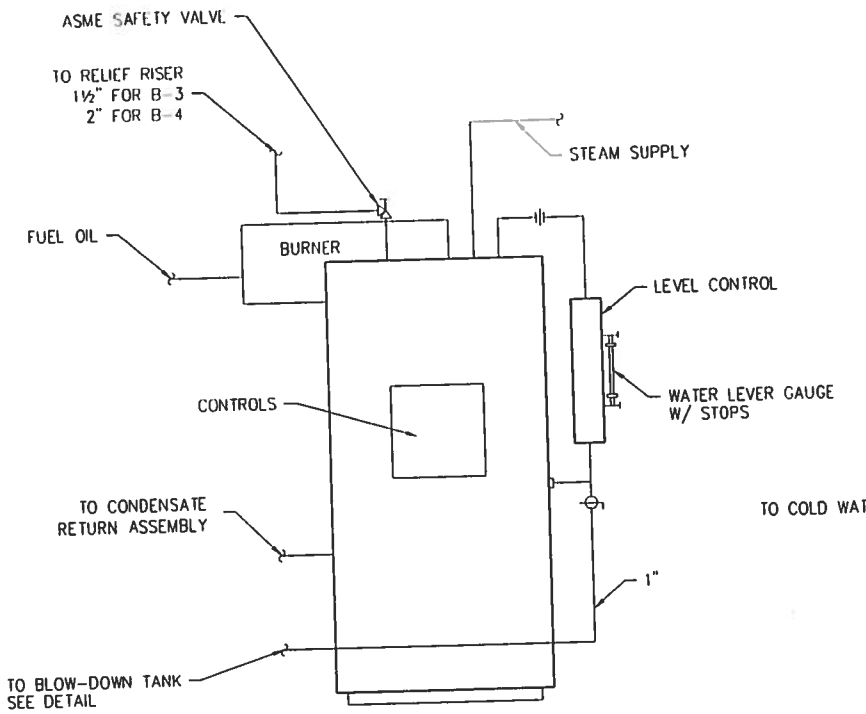

DETAIL "A"-STEAM BOILER PIPING

NOT TO SCALE

(BOILERS B-3 & B-4)

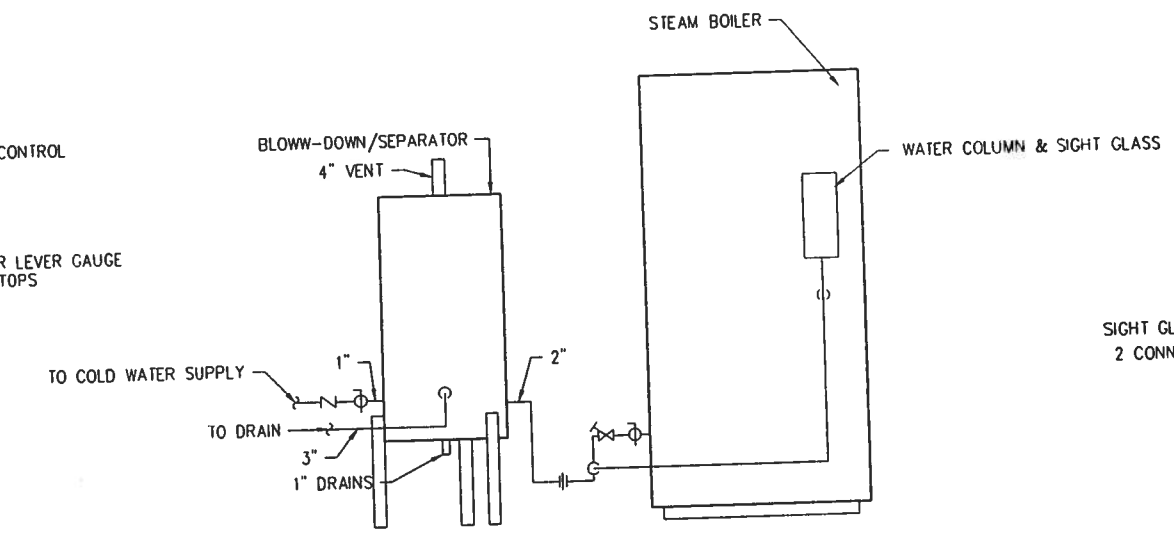

DETAIL "B"-BLOW-DOWN/SEPARATOR PIPING

NOT TO SCALE

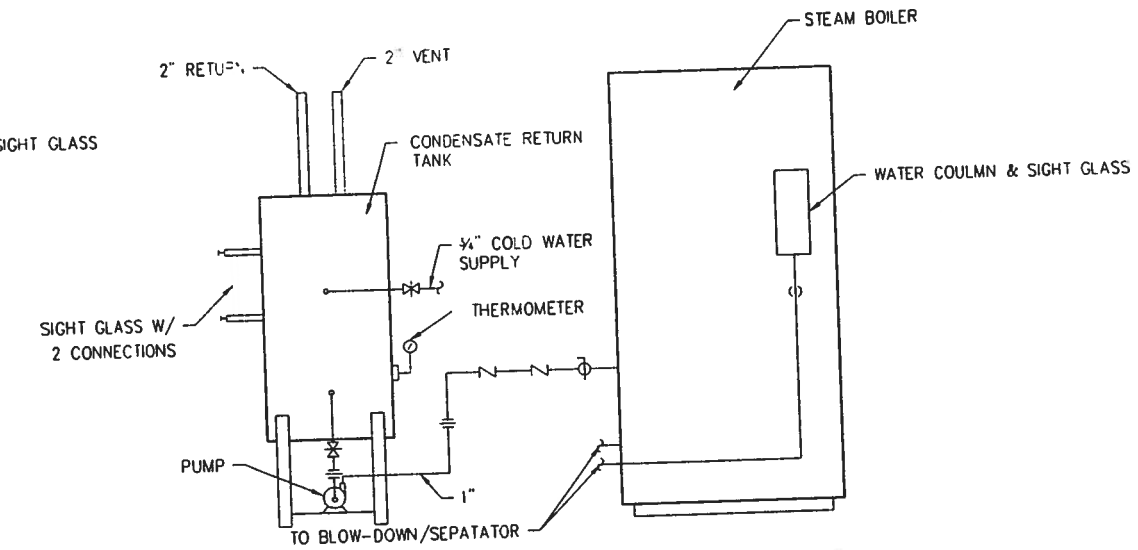

DETAIL "C"-CONDENSATE RETURN ASSEMBLY PIPING

NOT TO SCALE

STEAM BOILER PIPING (1) M3-3|M7-10

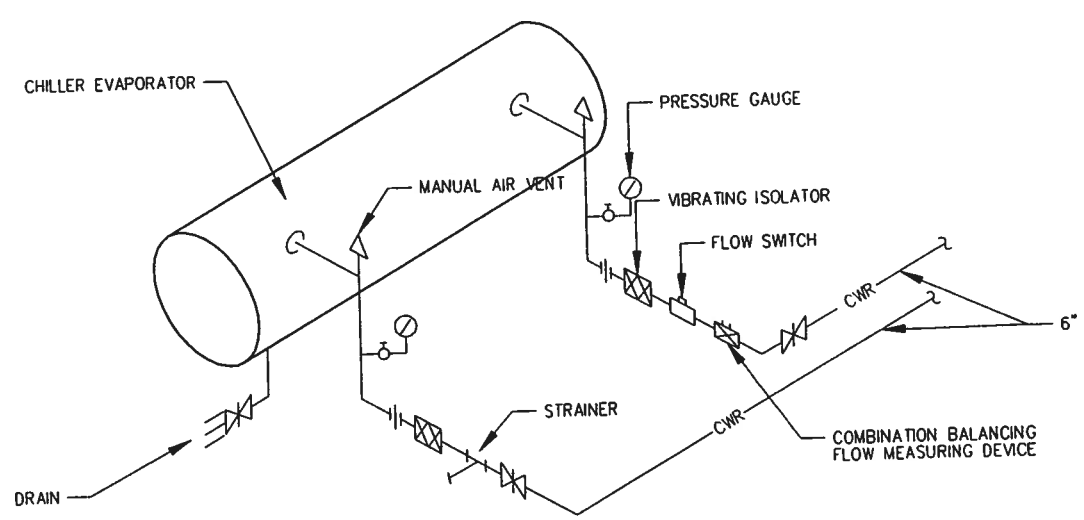

CHILLER EVAPORATOR PIPING (4) M3-2|M7-10

NOT TO SCALE

NOTE: IDENTIFY PIPING COMPONENTS ARE TYPICAL FOR ALL LOCATIONS SHOWN.

SHERLOCK, SMITH & ADAMS, INC.
ARCHITECTS – ENGINEERS
MONTGOMERY, ALABAMA

U.S. NAVAL STATION ROOSEVELT ROADS, P.R.
REPAIRS TO NAVAL HOSPITAL
DETAILS

CONSTR. CONTR. NO.	SPECIFICATION NO.	NAVFAC DRWG. NO.	TF NO. XXXXX
XXXXX	XXXXX	XXXXX	SHEET ? OF ??

ENG. DIV. DR.: DATE
SATISFACTORY TO: DATE
DESIGN BY: DUFFEE DRAWN BY: TAYLOR
APPROVED:

DATE | REVISION DESCRIPTION

NAVAL FACILITIES ENGINEERING COMMAND
DEPARTMENT OF THE NAVY
NAVY PUBLIC WORKS CENTER, JACKSONVILLE, FL
U.S. NAVAL STATION ROOSEVELT ROADS, P.R.
REPAIRS TO NAVAL HOSPITAL
DETAILS

PLATE NO.
M7-1

PWC # XXXXX

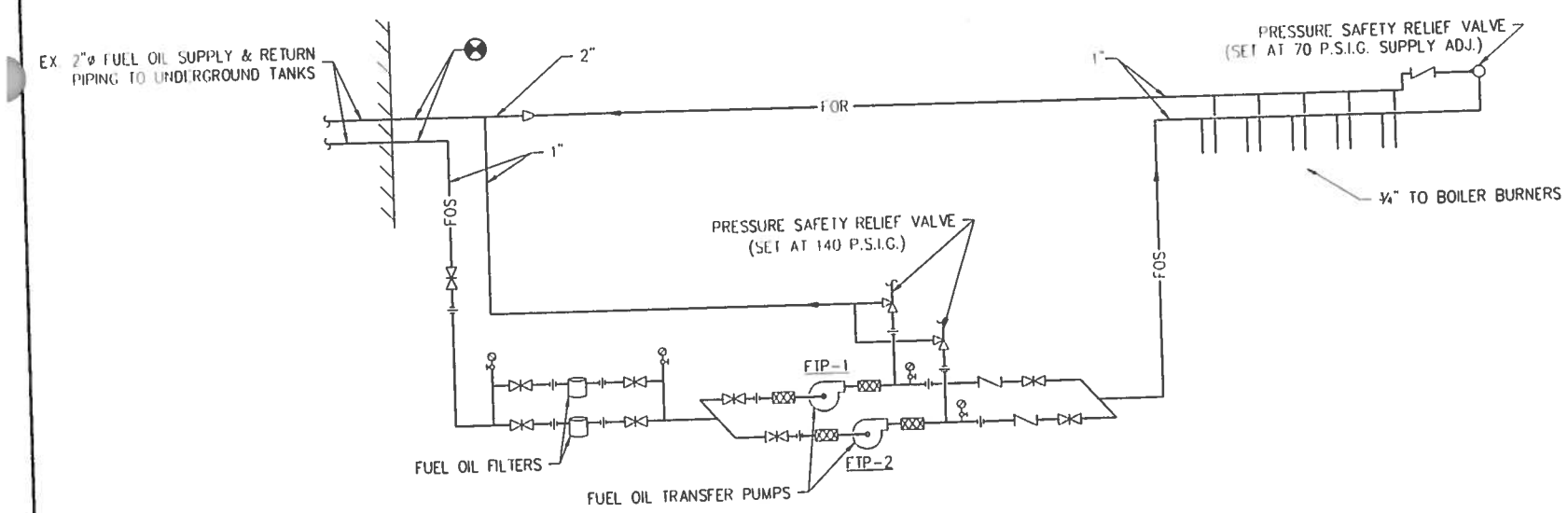

BOILER FUEL OIL PIPING (1) M3-3|M7-11

NOT TO SCALE

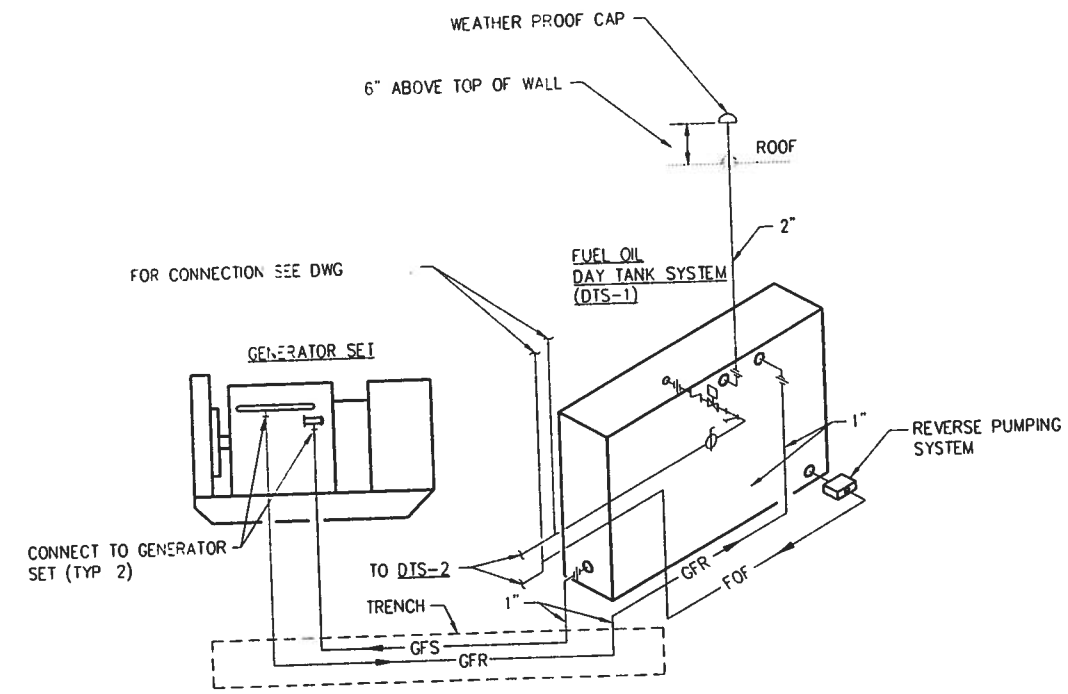

DECOUPLER PIPING (2) M3-1|M7-11

NOT TO SCALE

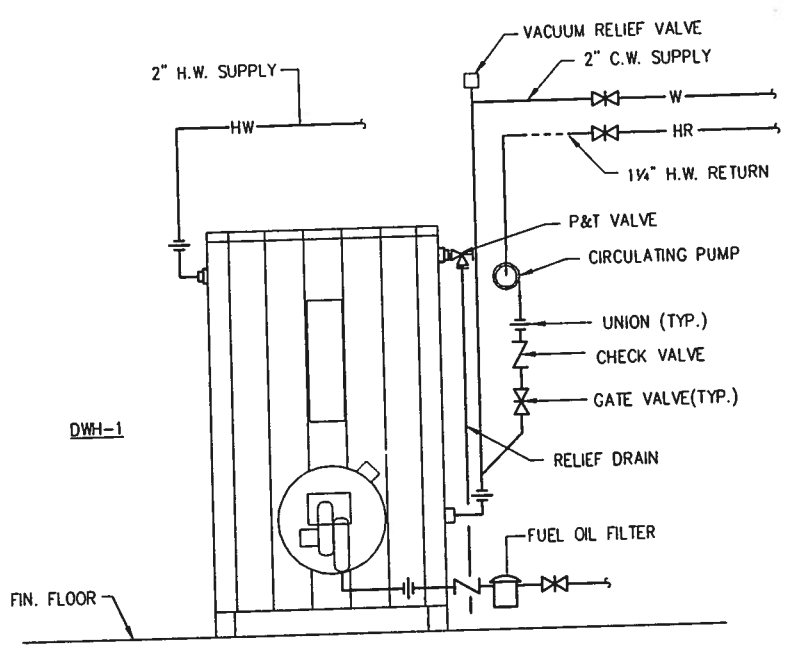

OIL FIRED DOMESTIC WATER HEATER WITH CIRCULATING PUMP (4) M3-3|M7-11

NO SCALE

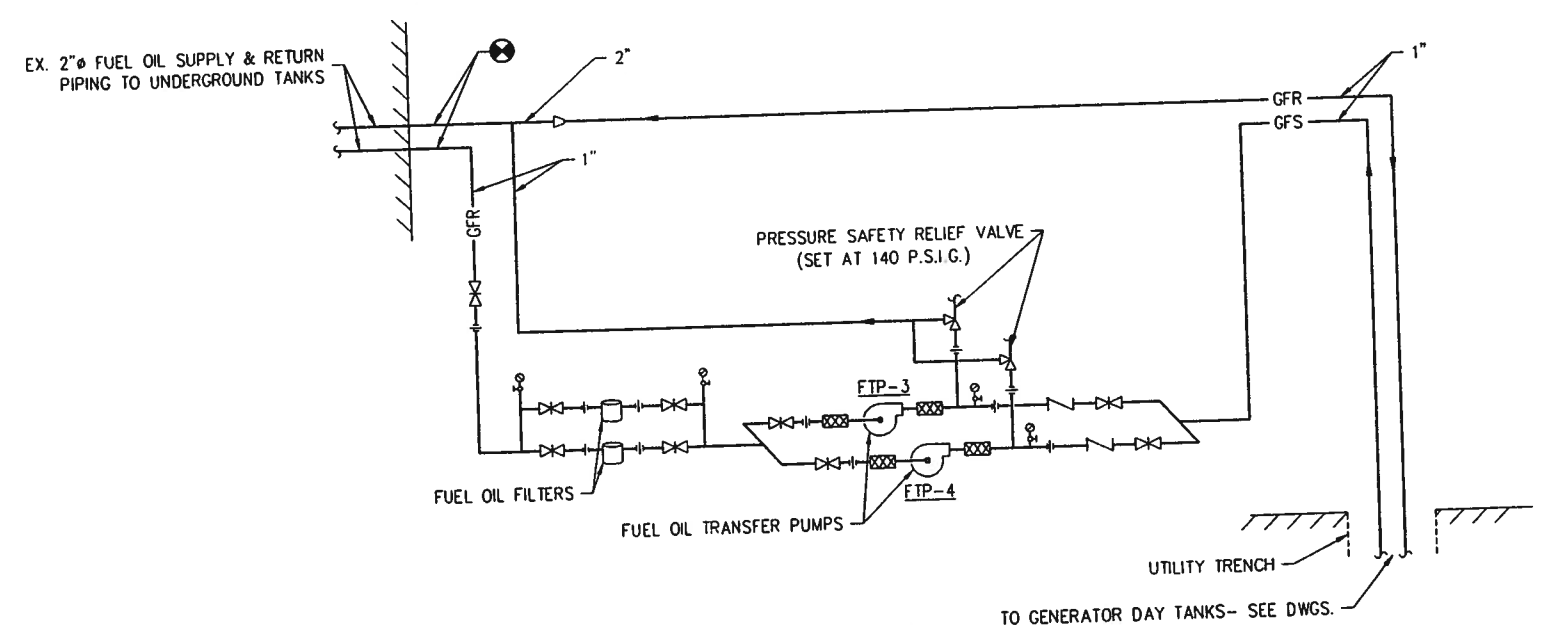

GENERATOR FUEL OIL PIPING (3) M3-3|M7-11

NOT TO SCALE

SHERLOCK, SMITH & ADAMS, INC.
ARCHITECTS - ENGINEERS
MONTGOMERY, ALABAMA

U.S. NAVAL STATION ROOSEVELT ROADS, P.R.
REPAIRS TO NAVAL HOSPITAL
DETAILS

CONSTR. CONTR. NO.	SPECIFICATION NO.	NAVFAC DRWG. NO.	TF NO. XXXXX
XXXXX	XXXXX	XXXXX	SHEET ? OF ??

DESIGN BY: DUFFEE DRAWN BY: TAYLOR
ENG. DIV. DIR.: DATE
SATISFACTORY TO: DATE
REVISION DESCRIPTION DATE

NAVAL FACILITIES ENGINEERING COMMAND
DEPARTMENT OF THE NAVY
NAVY PUBLIC WORKS CENTER, JACKSONVILLE, FL
U.S. NAVAL STATION ROOSEVELT ROADS, P.R.
REPAIRS TO NAVAL HOSPITAL
DETAILS

PLATE NO. M7-

PWC # XXXX

AIR HANDLING UNIT SCHEDULE

MARK	TYPE UNIT	AREA SERVED	SUPPLY FAN								COOLING COIL													MAXIMUM AIR P.D. IN. W.C.	HEAT PIPE COILS									REMARKS
								POWER						COOLING CAPACITY		ENT. AIR		CHILLED WATER							PRECOOLING COIL				HEAT TRANSFER COIL					
																					RUNOUT PIPE SIZE				ENT. AIR		LVG. AIR		ENT. AIR		LVG. AIR			
			TOTAL CFM	OUTSIDE AIR CFM	TOTAL STATIC PRESSURE (IN W.G.)	FAN TYPE	FAN H.P.	V	P	C	COIL AIR CFM	MAX. COIL FACE VEL. FPM	AIR SIDE PRESS. DROP (IN W.G.)	TOTAL BTU/HR.	SENSIBLE BTU/HR.	D.B. °F	W.B. °F	ENT. WATER TEMP. °F	LVG. WATER TEMP. °F	CHILLED WATER G.P.M.	SUPPLY	RETURN		D.B. °F	W.B. °F	D.B. °F	W.B. °F	D.B. °F	W.B. °F	D.B. °F	W.B. °F	AIR P.D. IN W.C.	
AHU-3A	①	OPERATING	12,170	3,370	5.60"	BI	20	460	3	60	12,170	500	1.00	412,700	229,800	66.8	61.7	45	53	113.0	3"	3"	15.0	78.6	65.9	66.8	61.7	50.1	50.0	61.9	55.0	.31	PROVIDE 2-WAY CONTROL VALVE
AHU-3B	①	DELIVERY	10,360	2,200	5.60"	BI	15	460	3	60	10,360	500	1.00	281,900	154,900	63.7	59.9	45	52	81.1	3"	3"	15.0	74.6	63.7	63.7	59.9	50.1	50.0	61.0	54.6	.25	PROVIDE 2-WAY CONTROL VALVE

① HORIZONTAL, CENTRAL STATION AHU, W/ CHILLED WATER COOLING COIL & B.I. FAN, MAX. COILING COIL WT'R P.D.=10 FT. H O, CONSTANT VOLUME.

CHILLER SCHEDULE

MARK	EVAPORATOR					CONDENSER			COMPRESSORS		MINIMUM EER INCLUDING FANS & COMPRESSORS	ELECTRICAL							REMARKS
							FANS									COMPRESSORS		FANS	
	TONS	GPM	ENTERING WATER (°F)	LEAVING WATER (°F)	MAXIMUM PRESSURE DROP (FT)	ENT. AIR TEMP. (°F)	DRIVE	DISCHARGE	TYPE	PERCENT CAPACITY REDUCTION		VOLTS	PHASE	CYCLE	MAXIMUM MCA	MAXIMUM RLA	MAXIMUM LRA *	MAXIMUM TOTAL FLA	
CH-1	225	540	55	45	16	95	DIRECT	VERTICAL	ROTARY SCREW	100 TO 25	9.4	460	3	60	562	410	2500	52	
CH-2	225	540	55	45	16	95	DIRECT	VERTICAL	ROTARY SCREW	100 TO 25	9.4	460	3	60	562	410	2500	52	

* BASED ON ACROSS-THE-LINE STARTER

EXPANSION TANK SCHEDULE

MARK	SYSTEM	TYPE	APPROX. SYSTEM VOL. GAL.	APPROX. SIZE	SYSTEM TEMP RANGE °F		INITIAL PRESS. IN TANK PSIG	PRV FILL PRESS. AT TANK PSIG	MAX. OPER. PRESS.		MIN. VOL GALLON	MIN. ACCEPT. VOLUME GALLON	REMARKS
					MIN.	MAX.			RELIEF VALVE PSIG	AT TANK PSIG			
ET-1	COOLING	VERTICAL	350	14x26	45	60	0	12	90	90	8	5	
ET-2	HEATING	VERTICAL	350	16x41	60	180	0	12	105	105	22	12	

CONDENSATE RETURN ASSEMBLY

MARK	CAPACITY (BOILER HORSEPOWER)	MIN. TANK SIZE (GALS.)	TANK CARBON STEEL THICKNESS (MIN. GA.)	PUMP						REMARKS
				PUMP		ELECTRICAL				
				GPM	HEAD (P.S.I.G.)	HP	VOLTS	PHASE	CYCLE	
CR-1	30	70	11	10	100	1½"	460	3	60	- MECHANICAL FLOAT & REGENERATIVE TURBINE TYPE PUMP
CR-2	50	70	11	10	100	3"	460	3	60	- MECHANICAL FLOAT & REGENERATIVE TURBINE TYPE PUMP

HOT WATER BOILER SCHEDULE (OIL FIRED)

MARK	DESCRIPTION	SERVICES	MIN. GROSS INPUT CAP. BTU/HR.	MIN. NET HEATING CAP. BTU/HR.	NOTE 1 FUEL OIL (G.P.H.)	HOT WATER OPERATING TEMPERATURE (°F)	APPROX. WATER GALLONS	ELECTRICAL				VENT SIZE INCHES	REMARKS
								BURNER MOTOR H.P.	VOLTS	PHASE	CYCLE		
B-1	VERTICAL FORCED DRAFT, STEEL, TUBELESS OIL FIRED, HOT WATER	HEATING COILS	2,230,000	1,895,000	18.0	190	300		460	3	60	12"ø	
B-2	VERTICAL FORCED DRAFT, STEEL, TUBELESS OIL FIRED, HOT WATER	HEATING COILS	2,230,000	1,895,000	18.0	190	300		460	3	60	12"ø	

NOTE 1- BOILERS SHALL OPERATE ON JP-5 FUEL OIL.

AIR SEPARATOR

UNIT No.	AIR SEPARATOR					PIPE SIZE TO TANK	COLD WATER FILL SIZE	REMARKS
	SIZE	GPM	MAX. P.D. FT.	BUILT-IN STRAINER REQUIRED				
AS-1,2 & 3	4"	147.0	5	YES		1½"	¾"	
AS-4	2½"	49.9	5	YES		¾"	¾"	

STEAM BOILER SCHEDULE (OIL FIRED)

MARK	DESCRIPTION	SERVICES	MIN. GROSS INPUT CAP. BTU/HR.	MIN. NET HEATING CAP. BTU/HR.	NOTE 1 OPERATING PRESSURE (PSIG)	NOTE 2 FUEL OIL (GPH)	POWER				VENT SIZE INCHES	REMARKS
							BURNER MOTOR H.P.	VOLTS	PHASE	CYCLE		
B-3	VERTICAL FORCED DRAFT, TUBELESS OIL FIRED, STEAM	KITCHEN AREA	1,000,000	850,000	20 (ADJ)	9.0	3/4	460	3	60	12"ø	PROVIDE CONDENSATE RETURN AND BLOW-DOWN SEPARATOR
B-4	VERTICAL FORCED DRAFT, TUBELESS OIL FIRED, STEAM	STERILIZERS	1,612,000	1,370,000	100 (ADJ)	15.0	3/4	460	3	60	12"ø	NO CONDENSATE RETURN

NOTE 1- BOILER B-3 SHALL BE DESIGNED FOR OPERATING AT PRESSURES UP TO 100 PSIG TO SERVE AS A BACK UP TO BOULER NO. B-4.
NOTE 2- BOILERS SHALL OPERATE ON JP-5 FUEL OIL.

DOMESTIC HOT WATER HEATER SCHEDULE

MARK	DESCRIPTION	SERVICES	MIN. GROSS INPUT CAP. BTU/HR.	MIN. NET HEATING CAP. BTU/HR.	NOTE 1 FUEL OIL (GPH)	POWER				VENT SIZE INCHES	REMARKS
						BURNER MOTOR H.P.	VOLTS	PHASE	CYCLE		
DWH-1	VERTICAL FORCED DRAFT, TUBELESS OIL FIRED, HOT WATER	DOME WITH HEATING	1,240,000	1,096,000	15.0	1½"	460	3	60	12"ø	

NOTE 1- BOILERS SHALL OPERATE ON JP-5 FUEL OIL.

DESIGN CONDITIONS

LOCATION	-	SUMMER	WINTER
AREAS TO BE HEATED & COOLED	OUTSIDE	90°FDB/81°FWB	68°FDB/57°FWB
	INSIDE	75°F.,50% R.H., MAX.	68°F.
AREAS TO BE HEATED ONLY	OUTSIDE	-	68°FDB/57°FWB
	INSIDE	-	55°F.

SHERLOCK, SMITH & ADAMS, INC.
ARCHITECTS - ENGINEERS
MONTGOMERY, ALABAMA

U.S. NAVAL STATION ROOSEVELT ROADS, P.R.
REPAIRS TO NAVAL HOSPITAL
SCHEDULES

CONSTR. CONTR. NO. XXXXX | SPECIFICATION NO. XXXXX | NAVFAC DRWG. NO. XXXXX | TF NO. XXXXX | SHEET ? OF ??

PLATE NO. M8-

PWC # XXXX

DEPARTMENT OF THE NAVY
NAVAL FACILITIES ENGINEERING COMMAND
NAVY PUBLIC WORKS CENTER, JACKSONVILLE, FL
U.S. NAVAL STATION ROOSEVELT ROADS, P.R.
REPAIRS TO NAVAL HOSPITAL
SCHEDULES

DESIGN BY: ??? DRAWN BY: ???

ENG. DIV. DR.: DATE: SATISFACTORY TO: DATE:

DATE	REVISION DESCRIPTION

AIR TERMINAL UNITS – V.A.V.–R.H. & C.V.–R.H.

MARK	TYPE	DESIGN C.F.M.	MIN. C.F.M. SET PT.	CAPACITY BTU/HR	AIR TEMP. °F		WATER TEMP. °F		G.P.M.	RUNOUT SIZE INCHES	T'STAT LOCATION	REHEAT COIL TYPE	APPROX. BOX SIZE	* MAXIMUM ALLOW. DB 3RD O.B.	MAXIMUM S.P. DROP	MAXIMUM WATER P.D. FT. H_2O	REMARKS
					ENT.	LVG.	ENT.	LVG.									
3A/A	2	220	220	7,046	51.0	80.7	180	160	0.7	1/2"	A248	WATER	5"ø	55	0.40	7	–
3A/B	2	220	220	7,019	51.0	80.5	180	160	0.7	1/2"	A246	WATER	5"ø	55	0.40	7	–
3A/C	2	430	430	13,734	51.0	80.6	180	160	1.4	1/2"	A236	WATER	7"ø	55	0.40	7	–
3A/D	2	1480	1480	54,476	51.0	85.1	180	160	5.5	1"	A231	WATER	14"ø	55	0.40	7	–
3A/E	2	1720	1720	53,870	51.0	80.0	180	160	5.4	1"	A250	WATER	16"ø	55	0.40	7	–
3A/F	2	510	510	15,973	51.0	80.0	180	160	1.6	3/4"	D205	WATER	8"ø	54	0.40	7	–
3A/G	2	370	370	11,588	51.0	80.0	180	160	1.2	1/2"	A253	WATER	7"ø	53	0.40	7	–
3A/H	2	530	530	16,600	51.0	80.0	180	160	1.7	3/4"	D219	WATER	8"ø	54	0.40	7	–
3A/J	2	1200	1200	37,584	51.0	80.0	180	160	3.8	1"	A249	WATER	14"ø	52	0.40	7	–
3A/K	2	540	540	16,913	51.0	80.0	180	160	1.7	3/4"	D229	WATER	9"ø	50	0.40	7	–
3A/L	2	600	600	18,792	51.0	80.0	180	160	1.9	3/4"	D228	WATER	9"ø	54	0.40	7	–
3A/M	2	120	120	3,758	51.0	80.0	180	170	0.8	1/2"	D214	WATER	5"ø	50	0.40	7	–
3A/N	2	580	580	18,166	51.0	80.0	180	160	1.8	3/4"	D213	WATER	9"ø	54	0.40	7	–
3A/P	2	390	390	12,215	51.0	80.0	180	160	1.2	1/2"	D209	WATER	7"ø	54	0.40	7	–
3A/Q	2	1840	1840	57,629	51.0	80.0	180	160	5.8	1"	C224	WATER	16"ø	55	0.40	7	–
3A/R	2	200	200	6,264	51.0	80.0	180	160	0.6	1/2"	PENT. NO. 1	WATER	5"ø	52	0.40	7	–
3B/A	2	1660	1660	52,558	51.0	80.3	180	160	5.3	1"	C233	WATER	16"ø	53	0.40	7	–
3B/B	2	1530	1530	47,920	51.0	80.0	180	160	4.8	1"	D216	WATER	14"ø	53	0.40	7	–
3B/C	2	220	220	6,890	51.0	80.0	180	160	0.7	1/2"	C235	WATER	5"ø	55	0.40	7	–
3B/D	2	1530	1530	48,644	51.0	80.4	180	160	4.9	1"	C233	WATER	14"ø	53	0.40	7	–
3B/E	2	2310	2310	72,349	51.0	80.0	180	160	7.2	1 1/4"	C222	WATER	24x16	60	0.40	7	–
3B/F	2	200	200	6,264	51.0	80.0	180	160	0.6	1/2"	C226	WATER	5"ø	53	0.40	7	–
3B/G	2	810	810	25,369	51.0	80.0	180	160	2.5	3/4"	C203	WATER	12"ø	50	0.40	7	–
3B/H	2	1950	1950	61,074	51.0	80.0	180	160	6.1	1 1/4"	C208	WATER	16"ø	54	0.40	7	–
3B/J	2	150	150	4,698	51.0	80.0	180	160	0.5	1/2"	PENT. NO. 2	WATER	5"ø	50	0.40	7	–

BOX TYPES:
1. VARIABLE AIR VOLUME W/HEATING COIL.
2. CONSTANT AIR VOLUME W/HEATING COIL.
3. CONSTANT AIR VOLUME – 2 POSITION, W/HEATING COIL FOR REVERSIBLE PRESSURE CHANGE-OVER.
4. CONSTANT AIR VOLUME REGULATOR, EXHAUST SYSTEM.

* DB .5" MININUM P*

FUEL OIL TRANSFER PUMPS (JP-5)

MARK	SERVICE	G.P.H.	HEAD P.S.I.G.	SUCTION LIFT (FEET OF FUEL)	ELECTRICAL				REMARKS
					H.P.	VOLTS	PH.	CY.	
FTP-1	BOILERS	178	84	17	1½	460	3	60	SAFETY RELIEF SET @ 140 P.S.I.
FTP-2	BOILERS (STAND BY)	178	84	17	1½	460	3	60	SAFETY RELIEF SET @ 140 P.S.I.
FTP-3	GENERATOR	132	50	17	1	460	3	60	SAFETY RELIEF SET @ 140 P.S.I.
FTP-4	GENERATOR (STAND BY)	132	50	17	1	460	3	60	SAFETY RELIEF SET @ 140 P.S.I.

FAN SCHEDULE

UNIT NO.	LOCATION	TOTAL AIR C.F.M.	INTERLOCK WITH	TYPE		RPM	TOTAL EXT. S.P. IN. W.C.	DESIGN MOTOR H.P.	MAX. FAN S.P.L. 3rd O.B.	POWER			DRIVE	REMARKS
				FAN	DIA.					VOLT	PH	CYC		
EF-3B1	ROOF	330	AHU-3B	1	13"	1,148	0.500	1/4	68.8	120	1	60	BELT	
EF-3B2	ROOF	100	AHU-3B	1	13"	837	0.375	1/4	61.0	120	1	60	BELT	
EF-3B3	ROOF	750	AHU-3B	1	13"	951	0.375	1/4	71.6	120	1	60	BELT	
EF-3B4	ROOF	840	AHU-3B	1	13"	1,083	0.500	1/4	74.9	120	1	60	BELT	
EF-3A1	ROOF	420	AHU-3A	1	13"	970	0.500	1/4	76.3	120	1	60	BELT	
EF-3A2	ROOF	670	AHU-3A	1	13"	990	0.500	1/4	73.1	120	1	60	BELT	
EF-E1	UTIL. BLDG.	1800	WALL SWITCH	3	18"	1140	0.25	1/4	80	120	1	60	DIRECT	
EF-E2	UTIL. BLDG.	1800	WALL SWITCH	3	18"	1140	0.25	1/4	80	120	1	60	DIRECT	
EF-E3	UTIL. BLDG.	1200	WALL SWITCH	3	18"	1140	0.25	1/4	80	120	1	60	DIRECT	
EF-E4	ELEC. SHAFTS	580	WALL SWITCH	3	16"	1140	0.375	1/8	80	120	1	60	DIRECT	
EF-E5	ELEC. SHAFTS	580	WALL SWITCH	3	16"	1140	0.375	1/8	80	120	1	60	DIRECT	
EF-E6	ELEC. SHAFTS	580	WALL SWITCH	3	16"	1140	0.375	1/8	80	120	1	60	DIRECT	
RF-3A	P. HOUSE 1	8,800	AHU-3A	2	20"	1,396	1.500	5.0	92.0	460	3	60	BELT	
RF-3B	P. HOUSE 2	8,160	AHU-3B	2	18"	1,630	1.250	5.0	94.0	460	3	60	BELT	

FAN TYPES:
1. CENTRIFUGAL ROOF MT'O, MOTORIZED DAMPER, PREFABRICATED CURB.
2. CABINET FAN
3. PROPELLAR VENTILATION FAN

SHERLOCK, SMITH & ADAMS, INC.
ARCHITECTS – ENGINEERS
MONTGOMERY, ALABAMA

U.S. NAVAL STATION ROOSEVELT ROADS, P.R.
REPAIRS TO NAVAL HOSPITAL
SCHEDULES

CONSTR. CONTR. NO. XXXXX | SPECIFICATION NO. XXXXX | NAVFAC DRWG. NO. XXXXX | TF NO. XXXXX | SHEET ? OF ??

ENG. DIV. DIR.: DATE: SATISFACTORY TO: DATE:

DESIGN BY: DUFFEE DRAWN BY: JOYNER

REVISION DESCRIPTION	DATE

NAVAL FACILITIES ENGINEERING COMMAND
DEPARTMENT OF THE NAVY
NAVY PUBLIC WORKS CENTER, JACKSONVILLE, FL
ROOSEVELT ROADS, P.R.
U.S. NAVAL STATION
REPAIRS TO NAVAL HOSPITAL
SCHEDULES

PLATE NO. M8-2

PWC # XXXXX

RETURN AND EXHAUST GRILLE SCHEDULE

R = RETURN AIR GRILLE
E = EXHAUST AIR GRILLE

MAX CFM	SIZE ✳✳✳	EQUIVALENT SIZES ✳	
60	6 x 6		
90	6 x 6	8 x 4	
130	8 x 6	12 x 4	
170	10 x 6		
190	8 x 8	12 x 6	
230	10 x 8	14 x 6	
300	10 x 10	12 x 8	18 x 6
340	12 x 10	20 x 6	
400	14 x 10	16 x 8	
450	12 x 12	16 x 10	18 x 8
530	14 x 12	18 x 10	
590	14 x 14	24 x 8	
670	16 x 14	18 x 12	
800	16 x 16	24 x 10	
900	18 x 16	24 x 12	
1040	18 x 18	24 x 14	30 x 12
1220	20 x 18	26 x 14	
1390	22 x 20	26 x 16	30 x 14
1550	24 x 20	30 x 16	36 x 14
✳✳			

NOTES:
✳ SELECT EQUIVALENT SIZES ONLY IF REQUIRED BY DUCTWORK LIMITATIONS.
✳✳ LARGER CAPACITIES SHALL USE MULTIPLE GRILLES.
✳✳✳ CONTRACTOR MAY SUBSTITUTE ROUND NECK OF EQUIVILENT SIZES
- MAX STATIC PRESSURE DROP FOR RETURN & EXHAUST GRILLES & REGISTERS SHALL BE .10 IN W.C

DUCT CONSTRUCTION & LEAK TEST SCHEDULE

SYSTEM	DUCT PRESSURE CLASS: SUPPLY DUCT FROM AHU TO TERMINAL UNIT	SUPPLY DUCT FROM TERMINAL UNIT TO FINAL FILTER	SUPPLY DUCT FROM FINAL FILTER TO ROOM INLET	SUPPLY DUCT FROM TERMINAL UNIT TO ROOM INLET	RETURN DUCT	EXHAUST AIR DUCT	OUTSIDE AIR DUCT	DUCT SEAL CLASS	DUCT TEST PRESSURE	DUCT LEAK CLASS: RECTANGULAR	DUCT LEAK CLASS: ROUND	REMARKS
AHU-1	6	2	1	1	2 N	½ N	½ N	A	8"	6	3	1
AHU 2	6	2	1	1	2 N	½ N	½ N	A	8"	6	3	1

NOTES: 1 - ONLY THE SUPPLY DUCT FROM THE SUPPLY FAN DISCHARGE TO THE TERMINAL UNIT INLET WILL BE DUCT LEAK TESTED.

FILTER SCHEDULE

FILTER UNIT NO.	EQUIPMENT OR ROOM SERVED	LOCATION ✳	C.F.M.	MINIMUM EFFICIENCY ✳✳	FILTER MAX. FACE VELOCITY	FILTER MAX. P.D. IN. W.C. CLEAN	CARTRIDGE: SIZE HxWxD	CARTRIDGE: NUMBER	FILTER BANKING ARRANGEMENT	RECOMMENDED FILTER CHANGE OUT P.D. IN. H_2O	REMARKS
FF-3A/A	A247,A248	A202	220	90%	300	0.4	24x12x12	1	2	1.0	
FF-3A/B	A246	A202	220	90%	300	0.4	24x12x12	1	2	1.0	
FF-3A/C	A236	A202	430	90%	300	0.4	24x12x12	1	2	1.0	
FF-3A/D	A231,A234	A234	1480	90%	300	0.4	24x12x12 / 24x24x12	1 / 1	2	1.0	
FF-3A/E	A250	A251	1720	90%	300	0.4	24x12x12 / 24x24x12	1 / 1	2	1.0	
FF-3A/G	A253,A254	A254	370	90%	300	0.4	24x12x12	1	2	1.0	
FF-3A/H	0218,D219,D221	D205	530	90%	300	0.4	24x12x12	1	2	1.0	
FF-3A/K	0229,D228	D221	540	90%	300	0.4	24x12x12	1	2	1.0	
FF-3A/L	D230	D221	600	90%	300	0.4	24x12x12	1	2	1.0	
FF-3A/M	D214	D206	120	90%	300	0.4	24x12x12	1	2	1.0	
FF-3A/Q	C224	C233	1840	90%	310	0.4	24x12x12 / 24x24x12	1 / 1	2	1.0	
FF-3B/A	C233	C239	1660	90%	300	0.4	24x12x12 / 24x24x12	1 / 1	2	1.0	
FF-3B/B	D216	D211	1530	90%	300	0.4	24x12x12 / 24x24x12	1 / 1	2	1.0	
FF-3B/D	C233	C201	1530	90%	300	0.4	24x12x12 / 24x24x12	1 / 1	2	1.0	
FF-3B/E	C203A,C222,C223	C203A	2310	90%	300	0.4	24x24x12	2	2	1.0	
FF-3B/H	C208	C203	1950	99.97%	300	0.4	24x24x12	2	2	1.0	
FF-1A	D227	D202	150	90%	300	0.4	24x12x12	1	2	1.0	
PF-3A	AHU-3A	PENT. 1	12,170	25%	300	0.15	-	-	1	0.3	
PF-3B	AHU-3B	PENT. 2	10,360	25%	300	0.15	-	-	1	0.3	
IF-3B	AHU-3B	PENT. 2	10,360	90%	400	0.45	-	-	1	1.0	

✳ ABOVE CEILINGS OR IN MECHANICAL PENTHOUSES
✳✳ FILTER EFFICIENCY BASED ON ASHRAE 52-76 TEST STANDARD

NOTES:
1 NO. OF FILTERS OF SIZE & QUANTITY TO MOUNT IN FILTER/MIXING BOX OF AHU TO BE FURNISHED.
2 BOTTTOM ACCESS FILTER & HOUSING

PUMP SCHEDULE

MARK	SERVICE	MAX. R.P.M.	G.P.M.	MIN. HEAD FT. H_2O	MIN. MOTOR SIZE H.P.	POWER: VOLTS	POWER: PH.	POWER: CY.	TYPE	LOCATION	REMARKS
HWP-1	HOT WATER HTG.	1,760	380	60'	7½	460	3	60	BASE M'TD	BOILER RM. SUB BSMT.	
HWP-2	HOT WATER HTG.	1,760	380	60'	7½	460	3	60	BASE M'TD	BOILER RM. SUB BSMT.	
HCP-1	BOILER-1	1,760	130	28'	1½	460	3	60	BASE M'TD	BOILER ROOM SUB BSMT.	STANDBY
HCP-2	BOILER-2	1,760	130	28'	1½	460	3	60	BASE M'TD	BOILER ROOM SUB BSMT.	
CLP-1	CW PRIM. LOOP	1,760	540	54'	10	460	3	60	BASE M'TD	MECH RM. UTILITY BLDG.	
CLP-2	CW PRIM. LOOP	1,760	540	54'	10	460	3	60	BASE M'TD	MECH RM. UTILITY BLDG.	
CLP-3	CW PRIM. LOOP	1,760	540	54'	10	460	3	60	BASE M'TD	MECH RM. UTILITY BLDG.	STANDBY
CZP-1	CW SECONDARY LOOP	1,760	540	45'	10	460	3	60	BASE M'TD	MECH RM. UTILITY BLDG.	VARIABLE SPEED

SUPPLY AIR DIFFUSER SCHEDULE

CFM	DESCRIPTION	SIZE ✳	THROW	MIN. INLET SIZE	REMARKS
100	SQ CLG DIFF	6 x 6	4-WAY	6"ø	
225	SQ CLG DIFF	9 x 9	4-WAY	8"ø	
400	SQ CLG DIFF	12 x 12	4-WAY	10"ø	
630	SQ CLG DIFF	15 x 15	4-WAY	12"ø	

✳ DIFFUSERS SHALL BE 4-WAY THROW UNLESS OTHERWISE SHOWN ON THE PLANS. DIFFUSERS MOUNTED IN ACOUSTICAL TILE CEILINGS SHALL BE DESIGNED TO FIT INTO A 24x24 "T" BAR SYSTEM. SEE REFLECTED CLG. PLANS FOR LOCATIONS AND CEILING TYPE.

- MAX STATIC PRESSURE DROP FOR SUPPLY AIR DIFFUSERS SHALL BE .10 IN. W.C.

GENERATOR FUEL OIL DAY TANK SYSTEMS

MARK	TANK VOLUME (GALLONS)	TANK MATERIAL (GAUGE)	RUPTURE BASIN CAPACITY (% TANKS)	REVERSING PUMP: MIN. CAPACITY (GPH)	REVERSING PUMP: PUMP HEAD (P.S.I.)	ELECTRICAL: H.P.	ELECTRICAL: VOLTS	ELECTRICAL: PH.	ELECTRICAL: CY.	REMARKS
DT-1	275	12	150	180	12	1/3	120	1	60	UL APPROVED W/ OVERFLOW ALARM, LOW FUEL ALARM & RUPTURE BASIN WARNING
DT-2	275	12	150	180	12	1/3	120	1	60	UL APPROVED W/ OVERFLOW ALARM, LOW FUEL ALARM & RUPTURE BASIN WARNING

SHERLOCK, SMITH & ADAMS, INC.
ARCHITECTS - ENGINEERS
MONTGOMERY, ALABAMA

U.S. NAVAL STATION ROOSEVELT ROADS, P.R.
REPAIRS TO NAVAL HOSPITAL
SCHEDULES

CONSTR. CONTR. NO.	SPECIFICATION NO.	NAVFAC DRWG. NO.	IF NO. XXXXX
XXXXX	XXXXX	XXXXX	SHEET ? OF ??

PLATE NO. M8-3

PWC # 00000

DEPARTMENT OF THE NAVY
NAVY PUBLIC WORKS CENTER, JACKSONVILLE, FL
NAVAL FACILITIES ENGINEERING COMMAND

U.S. NAVAL STATION ROOSEVELT ROADS, P.R.
REPAIRS TO NAVAL HOSPITAL
SCHEDULES

DESIGN BY: DUFFEE DRAWN BY: JOINER
DATE
REVISION DESCRIPTION
DWG. DIV. DIR.
DATE
SATISFACTORY TO:
DATE
APPROVED:

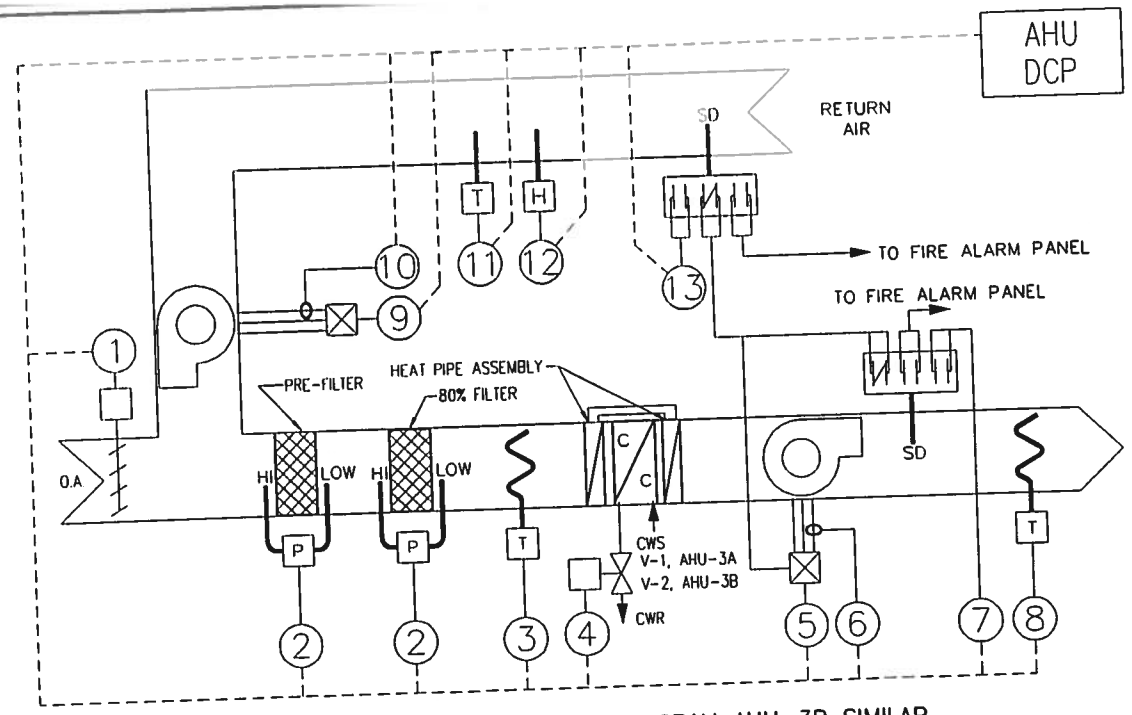

AHU-3A CONTROL DIAGRAM AHU-3B SIMILAR

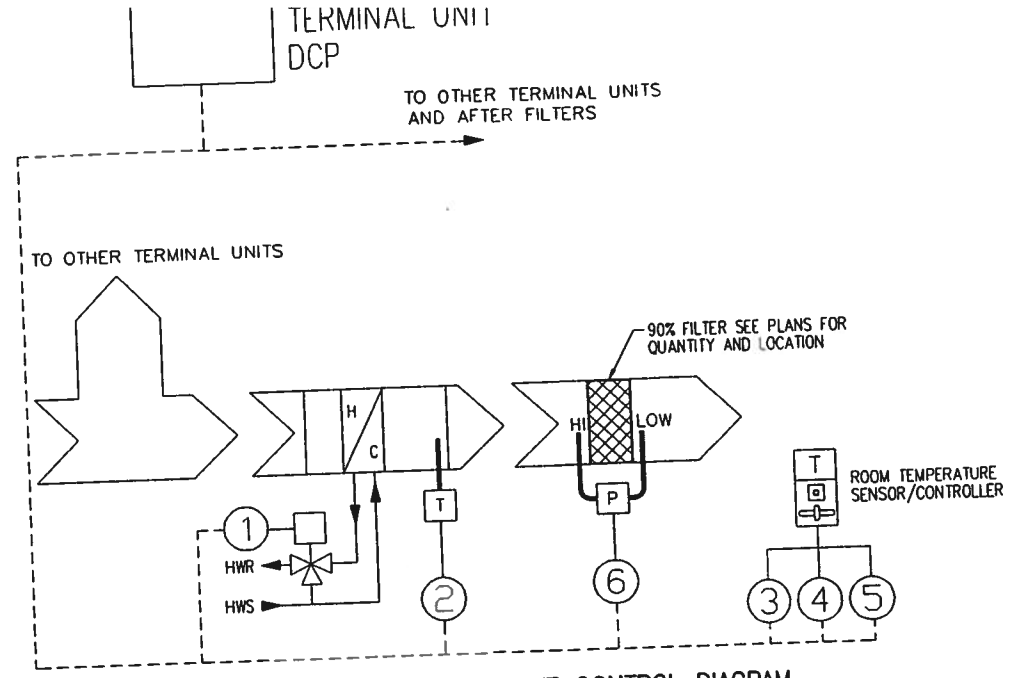

TERMINAL UNIT CONTROL DIAGRAM

CONTROL LEGEND

DCP	DIGITAL CONTROL PANEL
DDC	DIRECT DIGITAL CONTROL
VAV	VARIABLE AIR VOLUME
CV	CONSTANT AIR VOLUME
CVTR	CONSTANT VOLUME TERMINAL REHEAT
SD	SMOKE DETECTOR
O.A.	OUTDOOR AIR
OAD	OUTSIDE AIR DAMPER
R.A.	RETURN AIR
RAD	RETURN AIR DAMPER
N.O	NORMALLY OPEN
N.C.	NORMALLY CLOSED
C	COMMON
CWS	CHILLER WATER SUPPLY
CWR	CHILLED WATER RETURN
HWS	HOT WATER SUPPLY
HWR	HOT WATER RETURN
T	TEMPERATURE SENSOR
H	HUMIDITY SENSOR
BI	BINARY INPUT
BO	BINARY OUTPUT
AI	ANALOG INPUT
AO	ANALOG OUTPUT
P	DIFFERENTIAL PRESSURE SENSOR

AIR HANDLING UNIT (TYPICAL)

POINT MUNBER	POINT DESCRIPTION	TYPE	DAMPER POSITION	ON-OFF	CONTROL VALVE	SMOKE DETECTION	AIR TEMPERATURE	HUMIDITY	DIFF. PRESSURE	HIGH PRESSURE	FIRE ALARM	PWR USEAGE
1	OUTSIDE AIR DAMPERS	AO	●									
2	FILTER STATUS (DIFFERENTIAL PRESSURE)	AI							●	●		
3	AVERAGE MIXED AIR TEMPERATURE	AI					●					
4	COOLING COIL VALVE	AO			●							
5	SUPPLY FAN START/STOP	BO		●								
6	SUPPLY FAN CURRENT	AI									●	
7	SUPPLY DUCT SMOKE INDICATION	BI				●				●		
8	AVERAGE SUPPLY AIR TEMPERATURE	AI					●					
9	RETURN FAN START/STOP	BO		●								
10	RETURN FAN CURRENT	AI									●	
11	RETURN AIR TEMPERATURE	AI					●					
12	RETURN AIR HUMIDITY	AI						●				
13	RETURN DUCT SMOKE INDICATION	BI				●				●		

TERMINAL UNIT (TYPICAL)

POINT MUNBER	POINT DESCRIPTION	TYPE	CONTROL VALVE	AIR TEMPERATURE	DIFF. PRESSURE	OVER-RIDE SWITCH
1	HEATING COIL VALVE	AO	●			
2	SUPPLY AIR TEMPERATURE	AI		●		
3	ZONE AIR TEMPERATURE	AI		●		
4	PUSH BUTTON OCCUPANCY OVERRIDE	BO			●	
5	LOCAL ZONE TEMPERATURE SETPOINT ADJUSTMENT	AI		●		
6	FILTER STATUS (DIFFERENTIAL PRESSURE)	AI			●	

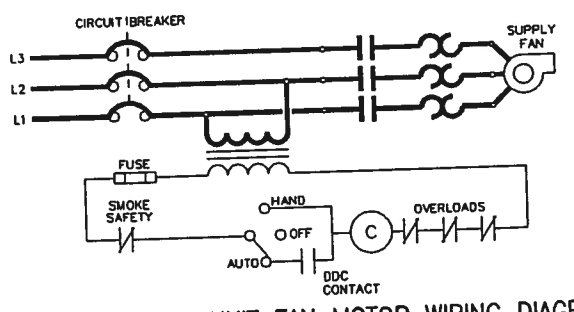

AIR HANDLING UNIT FAN MOTOR WIRING DIAGRAM

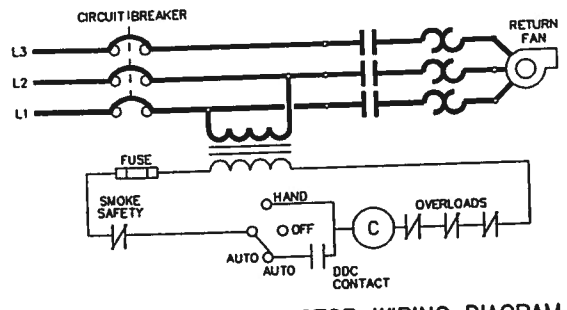

RETURN AIR FAN MOTOR WIRING DIAGRAM

SEQUENCE OF CONTROL:

GENERAL:

(A) WHEN PLACED IN OPERATION THE CONTROL SYSTEMS SHALL BE ENERGIZED THRU HAND-OFF-AUTO SWITCHES (WHEN IN AUTO POSITION), DAMPERS SHALL OPEN TO THEIR RESPECTIVE POSITIONS AND AFTER A VARIABLE TIME DELAY THE AIR HANDLING UNIT FAN/S AND THEIR INTERLOCKED FANS SHALL START. THE SYSTEM MAY ALSO BE ENERGIZED FROM THE TERMINAL UNIT THERMOSTATS (SEE TERMINAL UNIT CONTROL).

(B) WHENEVER AIR HANDLING UNIT/S ARE STOPPED CONTROL SYSTEM SHALL BE DE-ENERGIZED AND DAMPERS SHALL CLOSE, AIR HANDLING UNIT/S AND INTERLOCKED FANS SHALL STOP.

(C) ANY DUCT SMOKE DETECTOR SENSING SMOKE SHALL SIGNAL THE FIRE ALARM CONTROL PANEL, AND ALSO SEND A SIGNAL TO THE RESPECTIVE AIR HANDLING UNIT. WHEN SIGNAL IS RECEIVED BY THE AIR HANDLING UNIT, THE UNIT SHALL STOP AND INTERLOCKED FANS SHALL STOP UNLESS OTHERWISE INDICATED. THE SYSTEM MAY ONLY BE RESTARTED BY THE FIRE DEPARTMENT OR OTHER QUALIFIED PERSONNEL FROM THE FIRE ALARM CONTROL PANEL. WHEN AN ALL CLEAR SIGNAL IS RECEIVED ALL DETECTORS, ETC. SHALL BE AUTOMATICALLY RESET AND DAMPERS SHALL OPEN TO THEIR RESPECTIVE POSITIONS. AFTER A VARIABLE TIME DELAY AIR HANDLING UNIT FAN/S AND INTERLOCKED FANS SHALL START. COORDINATE THE WORK FURNISHED AND INSTALLED UNDER THE ELECTRICAL SECTION OF THE SPECIFICATIONS WITH WORK FURNISHED AND INSTALLED UNDER THE MECHANICAL SECTION OF THE SPECIFICATIONS.

(D) ALL CONTROL VALVES SHALL BE TWO (2) WAY UNLESS OTHERWISE INDICATED.

AHU-3A

WHEN THE SYSTEM IS IN OPERATION AS HERE-IN-BEFORE INDICATED THE FOLLOWING SEQUENCE SHALL OCCUR, THE AIR HANDLING UNIT SHALL OPERATE CONTINUOUSLY SUBJECT TO THE HAND-OFF-AUTO SWITCHES. THE AIR HANDLING UNIT FAN SHALL OPERATE THROUGH FIRE ALARM SYSTEM CONTACTS. THE CHILLED WATER CONTROL VALVE V-1 SHALL BE MODULATED BY A DISCHARGE AIR SENSOR/CONTROLLER TO MAINTAIN THE SET POINT. A RETURN AIR HUMIDITY SENSOR SET AT 50% R.H. (ADJUSTABLE) SHALL OVERRIDE THE DISCHARGE AIR TEMPERATURE SENSOR AND SHALL MODULATE THE CHILLED WATER CONTROL VALVE V-1 TO MAINTAIN SET POINT HUMIDITY. DIFFERENTIAL PRESSURE SENSORS SHALL MONITOR THE PRESSURE DROP ACROSS ALL FILTERS WHEN PRESSURE DROP RISES ABOVE SET POINT (1.0 IN. W.G. ADJUSTABLE. FOR 80% & 90% FILTERS & .50 IN. W.G ADJUSTABLE. FOR 25% FILTERS) ALARM SHALL OCCUR AND RED PILOT LIGHT LABELED "FILTER No. __ DIRTY, ROOM __" SHALL BE ENERGIZED. PILOT LIGHTS SHALL BE LOCATED NEXT TO AHU DCP. EACH FILTER SHALL HAVE ITS OWN PILOT LIGHT AND IDENTIFYING MARK ON LABEL.

AHU-3B

AHU-3B IS SIMILAR EXCEPT CHILLED WATER CONTROL VALVE SHALL BE V-2.

TERMINAL UNIT CONTROL:

GENERAL

THE TERMINAL UNIT CONTROLS SHALL BE FACTORY INSTALLED AND SHALL BE COMPATIBLE WITH THE DDC SYSTEM FURNISHED. ALL TERMINAL UNITS SERVED BY ONE AIR HANDLING UNIT SHALL BE CONNECTED BACK TO THE AIR HANDLING UNIT DCP. THE UNIT SHALL BE CAPABLE OF MAINTAINING THE AIR FLOWS AS INDICATED ON THE TERMINAL UNIT SCHEDULE. ALL TERMINAL UNITS SHALL BE INTERFACED WITH THE DDC CONTROL SYSTEM CENTRAL PROCESSOR SO THAT SPACE TEMPERATURES MAY BE READ AND RESET FROM THE CENTRAL UNIT PROCESSOR. EACH TERMINAL UNIT THERMOSTAT SHALL HAVE THE CAPABILITY TO START THE ENTIRE DDC CONTROL SYSTEM.

CAV (CONSTANT AIR VOLUME) W/ REHEAT

A SPACE TEMPERATURE SENSOR SHALL MODULATE THE REHEAT COIL CONTROL VALVE FROM THE MAXIMUM TO THE MINIMUM HOT WATER FLOW TO MAINTAIN SET POINT.

EXHAUST FANS

EXHAUST FANS SHALL BE INTERLOCKED TO OPERATE ONLY WHEN THE AIR HANDLING SYSTEM IT SERVES IS OPERATING. ANY INTERLOCKED DAMPERS SHALL OPEN WHEN FAN STARTS AND CLOSE WHEN FAN STOPS.

SHERLOCK, SMITH & ADAMS, INC.
ARCHITECTS – ENGINEERS
MONTGOMERY, ALABAMA

U.S. NAVAL STATION ROOSEVELT ROADS, P.R.
REPAIRS TO NAVAL HOSPITAL
CONTROLS

CONSTR. CONTR. NO.	SPECIFICATION NO.	NAVFAC DRWG. NO.	TP NO. XXXXX
XXXXX	XXXXX	XXXXX	SHEET ? OF ??

DEPARTMENT OF THE NAVY
NAVY PUBLIC WORKS CENTER, JACKSONVILLE, FL
NAVAL FACILITIES ENGINEERING COMMAND
ROOSEVELT ROADS, P.R.
U.S. NAVAL STATION
REPAIRS TO NAVAL HOSPITAL
CONTROLS

DESIGN BY: B.H. DRAWN BY: JOINER

REVISION DESCRIPTION	ENG. DIV. DIR.	DATE	SATISFACTORY TO:	DATE

PLATE NO. M9-

PWC # XXXX

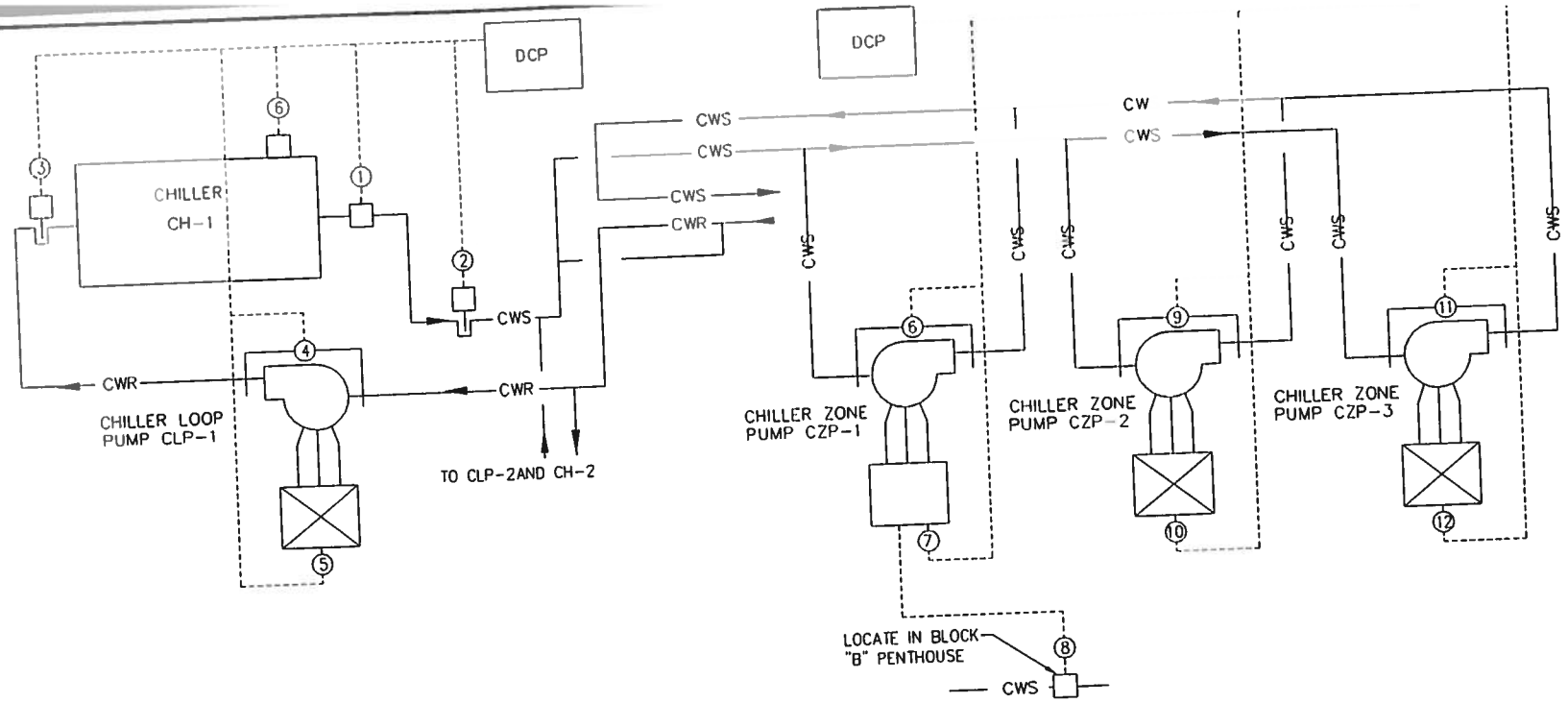

CHILLED WATER PUMP CLP-1 AND CHILLER CH-1
(CLP-2 & CH-2 SIMILAR)

CHILLED WATER ZONE PUMPS CZP-1, CZP-2 AND CZP-3

CLP-1 AND CH-1			CONTROL FUNCTION							
POINT MUNBER	POINT DESCRIPTION	TYPE	STATUS ON/OFF	START/STOP	WTR TEMPERATURE	WATER FLOW	RUN LOAD AMPS	RUN TIME	% LOAD CAPACITY	ALARM
1	CHILLED WATER FLOW SWITCH	BO				•				
2	CHILLED WATER SUPPLY TEMPERATURE	AI			•					
3	CHILLED WATER RETURN TEMPERATURE	AI			•					
4	DIFFERENTIAL PRESSURE	BI				•				
5	CHILLER WATER LOOP PUMP START/STOP	BO		•						
6	CHILLER CONTROL PANEL	AI	•	•	•		•	•	•	•

CZP-1 CZP-2 AND CZP-3			CONTROL FUNCTION							
POINT MUNBER	POINT DESCRIPTION	TYPE	STATUS ON/OFF	START/STOP	% LOAD	ALARM	WATER FLOW	PRESSURE		
6	DIFFERENTIAL PRESSURE	BI					•			
7	CZP-1 VARIABLE SPEED DRIVE	AI	•	•	•	•				
8	CZP-1 DIFFERENTIAL PRESSURE CONTROLLER	AO						•		
9	DIFFERENTIAL PRESSURE	BI					•			
10	CZP-2 START/STOP	BO		•						
11	DIFFERENTIAL PRESSURE	BI					•			
12	CZP-3 START/STOP (STAND-BY)	BO		•						

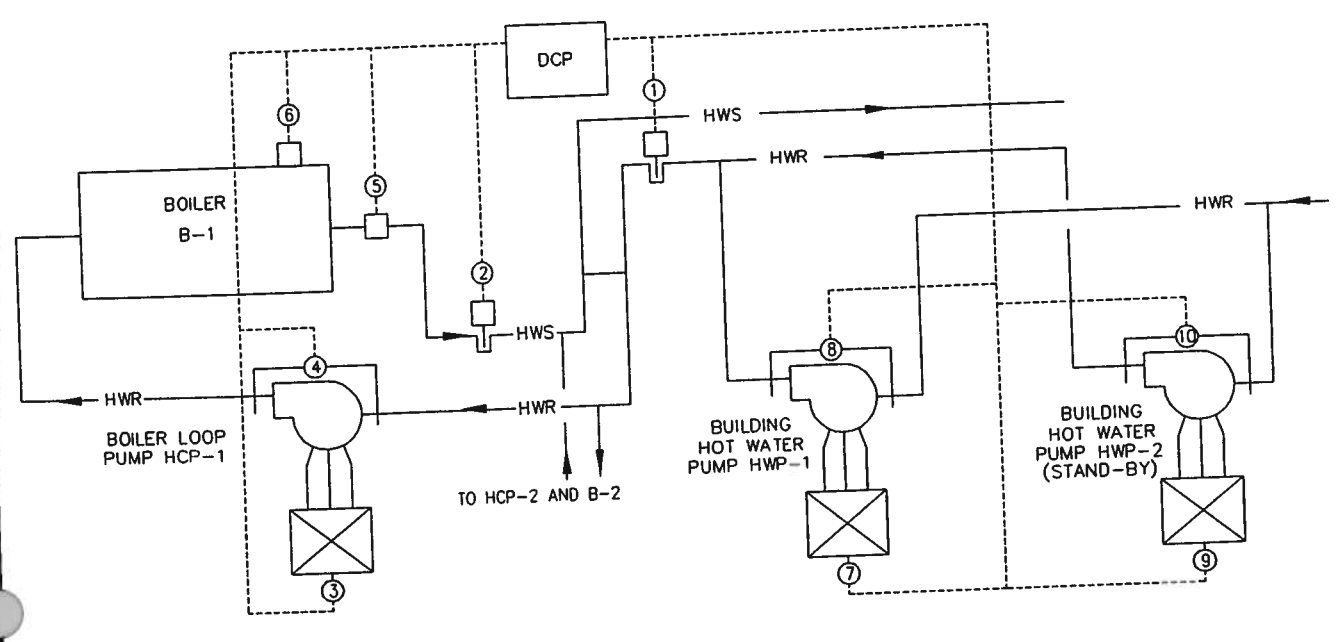

HWC-1 AND BOILER B-1
HWC-2 AND BOILER B-2 (SIMILAR)

HOT WATER PUMP HWP-1 AND HWP-2

HWC-1 AND BOILER B-1 AND HOT WATER PUMP HWP-1 AND HWP-2			CONTROL FUNCTION							
POINT MUNBER	POINT DESCRIPTION	TYPE	STATUS ON/OFF	START/STOP	WTR TEMPERATURE	WATER FLOW	PRESSURE	RUN TIME	% LOAD CAPACITY	ALARM
1	MAIN HOT WATER RETURN TEMPERATURE	AI			•					
2	BOILER HOT WATER SUPPLY TEMPERATURE	AI			•					
3	HCP-1 START/STOP	BO		•						
4	DIFFERENTIAL PRESSURE	BI				•				
5	FLOW SWITCH	BO	•							
6	BOILER CONTROL PANEL	AI	•	•				•	•	•
7	HWP-1 START STOP	BO		•						
8	DIFFERENTIAL PRESSURE	BI					•			
9	HWP-2 START STOP	BO		•						
10	DIFFERENTIAL PRESSURE	BI					•			

SEQUENCE OF CONTROL

CHILLED WATER PUMP CLP-1 AND CHILLER CH-1 (CLP-2 & CH-2 SIMILAR)

THE CONTROL SYSTEM SHALL BE ENERGIZED THROUGH A HAND-OFF-AUTO SWITCH LOCATED ON THE CONTROL PANEL SUBJECT TO DDC CONTROL. WHEN THE CONTROL SYSTEM IS ENERGIZED CLP-1 SHALL START AND WHEN WATER FLOW IS PROVEN THROUGH A FLOW SWITCH LOCATED ON THE CHILLED WATER DISCHARGE FROM THE CHILLER, THE CHILLER CONTROL CIRCUIT SHALL BE ENERGIZED AND THE CHILLER SHALL OPERATE THROUGH ITS OWN SAFETY AND OPERATING MICROPROCESSOR CONTROL SYSTEM TO MAINTAIN DISCHARGE WATER TEMPERATURE SET POINT. THE CHILLER MICROPROCESSOR CONTROLS SHALL BE COMPATIBLE WITH THE DDC SYSTEM FURNISHED AND SHALL BE CAPABLE OF SENDING AND RECEIVING DATA.

SECONDARY VARIABLE VOLUME CHILLED WATER PUMPS CZP-1, EX.CW-2 AND EX.CWP-STANDBY:

PUMPS EX.CWP-2 AND EX.CWP-STANDBY ARE EXISTING CONSTANT VOLUME PUMPS THAT SHALL BE PROVIDED WITH A NEW CONTACT IN ITS EXISTING STARTER WHICH SHALL BE ENERGIZED BY THE DDC SYSTEM AS HERE-IN-AFTER NOTED. PUMP CZP-1 IS A NEW VARIABLE VOLUME PUMP. PUMP EX.CWP-2 SHALL OPERATE WHENEVER BOTH CHILLERS ARE IN OPERATION. A DIFFERENTIAL PRESSURE SENSOR/CONTROLLER SHALL SIGNAL THE VARIABLE FREQUENCY DRIVE WHICH SHALL VARY PUMP CZP-1 SPEED IN RELATION TO THE CONTROLLER SIGNAL. WHEN THE PUMP HAS REDUCED ITS SPEED TO 0 OR WHEN ONE CHILLER HAS BEEN SHUTDOWN BY THE DDC SYSTEM THEN EXCWP-2 SHALL BE STOPPED AND PUMP CZP-1 SHALL START AND OPERATE AS PREVIOUSLY DESCRIBED. PUMP EX.CWP-STANDBY IS TO BE USED WHENEVER CZP-1 OR EX.CWP-2 IS DOWN.

HOT WATER PUMP HWP-1, HWC-1, BOILER B-1, HWC-2, BOILER B-2 AND HWP-2

THE CONTROL SYSTEM SHALL BE ENERGIZED THROUGH HAND-OFF-AUTO SWITCHES LOCATED ON THE CONTROL PANEL SUBJECT TO DDC CONTROL. WHEN THE CONTROL SYSTEM IS ENERGIZED BOILER LOOP PUMP HCP-1 SHALL START AND WHEN WATER FLOW IS PROVEN THROUGH A FLOW SWITCH LOCATED ON BOILER B-1 WATER DISCHARGE, THEN THE BOILER CONTROL CIRCUIT SHALL BE ENERGIZED AND THE BOILER SHALL OPERATE THROUGH ITS OWN SAFETY AND OPERATING CONTROLS TO MAINTAIN DISCHARGE WATER TEMPERATURE SET POINT. HCP-2 AND BOILER B-2 SHALL BE THE SAME AS INDICATED FOR HCP-1 AND B-1. A TEMPERATURE SENSOR LOCATED ON THE MIXED HOT WATER RETURN TO BOILERS B-1 AND B-2 SHALL ALLOW THE DDC SYSTEM TO SEQUENCE THE PUMP AND BOILER OPERATION IN RESPONSE TO THE BUILDING LOAD. THE DDC SYSTEM SHALL START HWP-1 WHEN THE BOILER WATER TEMPERATURE IS REACHED. HWP-2 SHALL OPERATE IN A STANDBY MODE TO HWP-1. THE BOILER CONTROL SHALL BE COMPATIBLE WITH THE DDC SYSTEM FURNISHED AND SHALL BE CAPABLE OF SENDING AND RECEIVING DATA.

FUEL OIL TRANSFER PUMPS FTP-1 AND FTP-2 (FTP-3 AND FTP-4 SIMILAR)

FTP-1 AND FTP-2 SHALL BE STARTED BY THE DDC SYSTEM AS FOLLOWS: THE LEAD PUMP SHALL START AND OPERATE TO PROVIDE FUEL OIL SUPPLY. IF THE SYSTEM PRESSURE DROPS TO A POINT 30% BELOW THE DESIGN PRESSURE THEN THE LAG PUMP SHALL START AND OPERATE. THE DDC SYSTEM SHALL START AND MONITOR THE PUMP OPERATION AND SHALL ALTERNATE LEAD/LAG PUMP SEQUENCE.

GENERATOR FUEL OIL DAY TANK DT-1 AND DT-2

THE DDC SYSTEM SHALL MONITOR THE DAY TANK REVERSE PUMP ON-OFF OPERATION. HIGH LEVEL AND LOW LEVEL DAY TANK OIL LEVELS SHALL BE ALARMED TO THE DDC SYSTEM AS WELL AS FUEL OIL IN RUPTURE VESSEL WARNING ALARM.

BOILER B-3 AND CRU-1 (BOILER B-4 AND CRU SIMILAR)

THE BOILER SHALL OPERATE THROUGH ITS OWN SAFETY AND OPERATING CONTROLS TO MAINTAIN THE DESIGN STEAM PRESSURE. THE BOILER CONTROLS SHALL OPERATE CRU-1 AS REQUIRED FOR FEED WATER. THE DDC SYSTEM SHALL MONITOR THE BOILER CONTROL PANEL, STEAM PRESSURE, AND CRU-1 OPERATION TO PROVIDE ALL ALARMS. THE BOILER CONTROLS SHALL BE COMPATIBLE WITH THE DDC SYSTEM FURNISHED AND SHALL BE CAPABLE OF SENDING AND RECEIVING DATA.

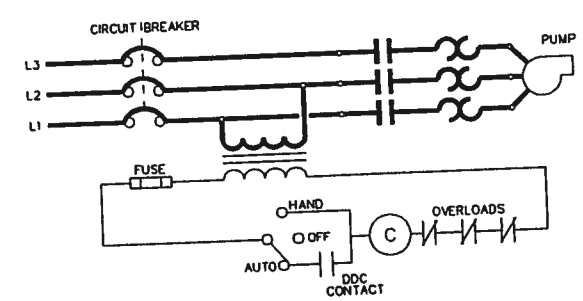

PUMP MOTOR WIRING DIAGRAM

SHERLOCK, SMITH & ADAMS, INC.
ARCHITECTS – ENGINEERS
MONTGOMERY, ALABAMA

U.S. NAVAL STATION ROOSEVELT ROADS, P.R.
REPAIRS TO NAVAL HOSPITAL
CONTROLS

CONSTR. CONTR. NO.	SPECIFICATION NO.	NAVFAC DRWG. NO.	TF NO. XXXXX
XXXXX	XXXXX	XXXXX	SHEET ? OF ??

PLATE NO. M9-2

PWC # XXXXX

DEPARTMENT OF THE NAVY
NAVAL FACILITIES ENGINEERING COMMAND
NAVY PUBLIC WORKS CENTER, JACKSONVILLE, FL
U.S. NAVAL STATION ROOSEVELT ROADS, P.R.
REPAIRS TO NAVAL HOSPITAL
CONTROLS

DESIGN BY: B.I.L. DRAWN BY: JOINER

REVISION DESCRIPTION | DATE | DWG. OK'D: | DATE: | SATISFACTORY TO: | DATE:

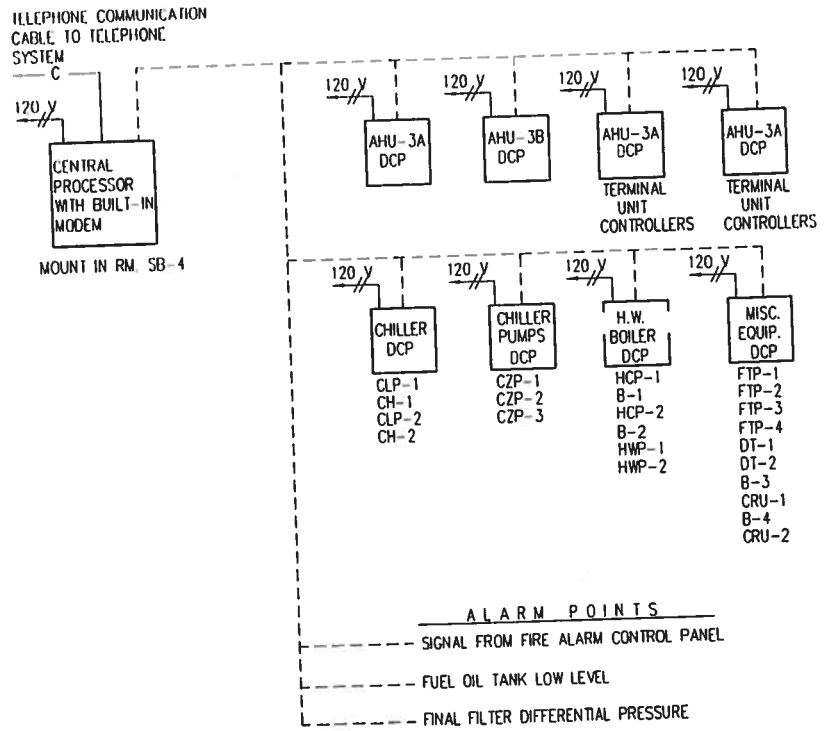

DDC SYSTEMS ARCHITECTURE

NOTES:

ONLY THE SYSTEMS SHOWN SHALL BE A DIRECT DIGITAL CONTROL SYSTEM. THE EXISTING EQUIPMENT SERVED BY A PNEUMATIC SYSTEM WHICH IS TO REMAIN, INCLUDES CONTROL AIR COMPRESSOR, DRYER, PIPING TERMINAL BOXES AND PNEUMATIC THERMOSTATS AIR HANDLING UNITS ETC.

THE DIAL-UP MODEM SHALL BE CAPABLE OF COMMUNICATION WITH THE BASE PUBLIC WORKS DEPARTMENT.

INTERACTION OF DDC WITH EMERGENCY POWER STANDBY GENERATOR SYSTEM:

SPECIAL SEQUENCE OF EVENTS FOR THE DDC WHEN THE HOSPITAL'S MAIN NORMAL ELECTRICAL SYSTEM IS LOST AND THE ALTERNATE EMERGENCY GENERATOR SYSTEM IS AS FOLLOWS:

WHEN THE NORMAL POWER IS INTERRUPTED DUE TO POWER INTERRUPTION THEN CHILLER CH-1 SHALL GO TO 2/3 CAPACITY OPERATION BY UTILIZING THE CHILLER CAPACITY MODULATION CONTROLS. CLP-1 AND CZP-1 SHALL OPERATE TO PROVIDE PARTIAL COOLING CAPACITY DURING THIS POWER INTERRUPTION

WHEN NORMAL ELECTRICAL POWER IS RETURNED THEN ALL SYSTEMS SHALL GO TO NORMAL SEQUENCE.

FUEL OIL TRANSFER PUMPS FTP-1 AND FTP-2 (FTP-3 AND FTP-4 SIMILAR)

FTP-1 AND FTP-2 SHALL BE STARTED BY THE DDC SYSTEM AS FOLLOWS: THE LEAD PUMP SHALL START AND OPERATE TO PROVIDE FUEL OIL SUPPLY. IF THE SYSTEM PRESSURE DROPS TO A POINT 30% BELOW THE DESIGN PRESSURE THEN THE LAG PUMP SHALL START AND OPERATE. THE DDC SYSTEM SHALL START AND MONITOR THE PUMP OPERATION AND SHALL ALTERNATE LEAD/LAG PUMP SEQUENCE.

GENERATOR FUEL OIL DAY TANK DT-1 AND DT-2

THE DDC SYSTEM SHALL MONITOR THE DAY TANK REVERSE PUMP ON-OFF OPERATION. HIGH LEVEL AND LOW LEVEL DAY TANK OIL LEVELS SHALL BE ALARMED TO THE DDC SYSTEM AS WELL AS FUEL OIL IN RUPTURE VESSEL WARNING ALARM.

BOILER B-3 AND CRU-1 (BOILER B-4 AND CRU SIMILAR)

THE BOILER SHALL OPERATE THROUGH ITS OWN SAFETY AND OPERATING CONTROLS TO MAINTAIN THE DESIGN STEAM PRESSURE. THE BOILER CONTROLS SHALL OPERATE CRU-1 AS REQUIRED FOR FEED WATER. THE DDC SYSTEM SHALL MONITOR THE BOILER CONTROL PANEL, STEAM PRESSURE, AND CRU-1 OPERATION TO PROVIDE ALL ALARMS. THE BOILER CONTROLS SHALL BE COMPATIBLE WITH THE DDC SYSTEM FURNISHED AND SHALL BE CAPABLE OF SENDING AND RECEIVING DATA.

SHERLOCK, SMITH & ADAMS, INC.
ARCHITECTS - ENGINEERS
MONTGOMERY, ALABAMA

U.S. NAVAL STATION ROOSEVELT ROADS, P.R.
REPAIRS TO NAVAL HOSPITAL
CONTROLS

CONSTR. CONTR. NO.	SPECIFICATION NO.	NAVFAC DRWG. NO.	TF NO. XXXXX
XXXXX	XXXXX	XXXXX	SHEET ? OF ??

ENG. DIV. DIR.: DATE:
SATISFACTORY TO: DATE:
DESIGN BY: B.H. DRAWN BY: JOINER

DATE	REVISION DESCRIPTION

NAVAL FACILITIES ENGINEERING COMMAND
DEPARTMENT OF THE NAVY
NAVY PUBLIC WORKS CENTER, JACKSONVILLE, FL
U.S. NAVAL STATION ROOSEVELT ROADS, P.R.
REPAIRS TO NAVAL HOSPITAL
CONTROLS

PLATE NO. M9-3

PWC # XXXXX