MAR-96

50% DESIGN SUBMITTAL

CONTRACT NO. N68931-95-D-8431
DELIVERY ORDER NO. 0002
4 MARCH 1996

REPAIRS TO NAVAL HOSPITAL

ROOSEVELT ROADS NAS, PUERTO RICO

5H

SHERLOCK, SMITH & ADAMS, INC.
ARCHITECTS – ENGINEERS
MONTGOMERY, ALABAMA

U.S. NAVAL STATION ROOSEVELT ROADS, P.R.
REPAIRS TO NAVAL HOSPITAL
TITLE SHEET

CONSTR. CONTR. NO.	SPECIFICATION NO.	NAVFAC DRWG. NO.	TF NO
			SHEET 2 OF 22

SEAL AR

ENG. OV. DR. DATE
SATISFACTORY TO: DATE
DESIGN BY: RAS DRAWN BY: FLT
CHK. BY: RAS APPROVED:

DATE	REVISION DESCRIPTION

DEPARTMENT OF THE NAVY
NAVAL FACILITIES ENGINEERING COMMAND
NAVY PUBLIC WORKS CENTER, JACKSONVILLE, FL
U.S. NAVAL STATION ROOSEVELT ROADS, P.R.
REPAIRS TO NAVAL HOSPITAL
TITLE SHEET

CONSTR. CONTR. NO. NAVFAC DWG. NO. PWC DWG. NO.

PLATE NO.
T-1

INDEX OF DRAWINGS

SHEET #	SEQ. #	SHEET TITLE	EFD#	NAVFAC#
GENERAL				
T-1	? of ??	TITLE SHEET	X	X
T-2	? of ??	INDEX OF DRAWINGS	X	X
CIVIL				
C-1	? of ??	EXISTING SITE AND DEMOLITION PLAN	X	X
C-2	? of ??	SITE PLAN	X	X
C-3	? of ??	SITE GRADING & DRAINAGE PLAN	X	X
C-4	? of ??	SITE UTILITY PLAN	X	X
C-5	? of ??	DETAILS	X	X
ARCHITECTURAL				
A0-1	? of ??	ABBREVIATIONS / LEGENDS / NOTES	X	X
A0-2	? of ??	PHASING DIAGRAM	X	X
A0-3	? of ??	PHASING PLANS / SUB-BASEMENT & BASEMENT LEVELS	X	X
A0-4	? of ??	PHASING PLANS / FIRST FLOOR LEVEL	X	X
A0-5	? of ??	PHASING PLANS / SECOND FLOOR & ROOF LEVELS	X	X
A1-1	? of ??	BASEMENT DEMOLITION PLAN	X	X
A1-2	? of ??	FIRST FLOOR DEMOLITION PLAN	X	X
A1-3	? of ??	SECOND FLOOR DEMOLITION PLAN	X	X
A1-4	? of ??	ROOF DEMOLITION PLAN	X	X
A2-1	? of ??	COMPOSITE BASEMENT FLOOR PLAN	X	X
A2-2	? of ??	COMPOSITE FIRST FLOOR PLAN	X	X
A2-3	? of ??	COMPOSITE SECOND FLOOR PLAN	X	X
A2-4	? of ??	COMPOSITE ROOF PLAN	X	X
A3-1	? of ??	FINISH SCHEDULE	X	X
A3-2	? of ??	FINISH SCHEDULE	X	X
A3-3	? of ??	FINISH SCHEDULE	X	X
A3-4	? of ??	FINISH SCHEDULE	X	X
A4-1	? of ??	EXTERIOR ELEVATIONS	X	X
A4-2	? of ??	EXTERIOR ELEVATIONS	X	X
A5-1	? of ??	DOOR, VIEW WINDOW AND LOUVER SCHEDULES AND DETAILS	X	X
A6-1	? of ??	LARGE SCALE FLOOR PLANS	X	X
A7-1	? of ??	LARGE SCALE FLOOR PLANS	X	X
A8-1	? of ??	SECTIONS & DETAILS	X	X
A8-2	? of ??	SECTIONS & DETAILS	X	X
A8-3	? of ??	SECTIONS & DETAILS	X	X
A8-4	? of ??	SECTIONS & DETAILS	X	X
A9-1	? of ??	BASEMENT REFLECTED CEILING PLAN	X	X
A9-2	? of ??	FIRST FLOOR REFLECTED CEILING PLAN	X	X
A9-3	? of ??	SECOND FLOOR REFLECTED CEILING PLAN	X	X
ASBESTOS AND LEAD REMOVAL				
AL-01	? of ??	ACM ABATEMENT SUB-BASEMENT MECH. EQUIP. & PIPING PLAN	X	X
AL-02	? of ??	ACM ABATEMENT PARTIAL CEILING PLAN - BASEMENT BLK. D	X	X
AL-03	? of ??	ACM ABATEMENT PARTIAL CEILING PLAN - 1ST FLOOR BLK. D	X	X
AL-04	? of ??	ACM ABATEMENT MECH. PIPING & DUCT PLAN 2ND FLR. BLK. A	X	X
AL-05	? of ??	ACM ABATEMENT MECH. PIPING & DUCT PLAN 2ND FLR. BLK. B	X	X
AL-06	? of ??	ACM ABATEMENT MECH. PIPING & DUCT PLAN 2ND FLR. BLK. C	X	X
AL-07	? of ??	ACM ABATEMENT MECH. PIPING & DUCT PLAN 2ND FLR. BLK. D	X	X
STRUCTURAL				
S1-1	? of ??	TYP. DETAILS & GENERAL NOTES	X	X
S2-1	? of ??	MECH./ELECT. ROOM ADDITION PLAN	X	X
S2-2	? of ??	PENTHOUSE FRAMING PLANS & DETAILS	X	X
S2-3	? of ??	ELECTRICAL ROOM ADDITIONS	X	X

SHEET #	SEQ. #	SHEET TITLE	EFD#	NAVFAC#
MECHANICAL				
M0-1	? of ??	MECHANICAL LEGEND	X	X
M1-1	? of ??	MECHANICAL DEMOLITION PLAN - SUB-BASEMENT	X	X
M1-2	? of ??	MECHANICAL DEMOLITION PLAN - 2ND FLOOR BLOCK A	X	X
M1-3	? of ??	MECHANICAL DEMOLITION PLAN - 2ND FLOOR BLOCK C	X	X
M1-4	? of ??	MECHANICAL DEMOLITION PLAN - 2ND FLOOR BLOCK D	X	X
M1-5	? of ??	MECHANICAL DEMOLITION PLAN - ROOF	X	X
M2-1	? of ??	MECHANICAL DUCTWORK PLAN - 2ND FLOOR BLOCK A	X	X
M2-2	? of ??	MECHANICAL DUCTWORK PLAN - 2ND FLOOR BLOCK C	X	X
M2-3	? of ??	MECHANICAL DUCTWORK PLAN - 2ND FLOOR BLOCK D	X	X
M3-1	? of ??	MECHANICAL PIPING PLAN - UTILITY BUILDING	X	X
M3-2	? of ??	MECHANICAL PIPING PLAN - SUB-BASEMENT	X	X
M3-3	? of ??	MECHANICAL PIPING PLAN - 2ND FLOOR BLOCK A	X	X
M3-4	? of ??	MECHANICAL PIPING PLAN - 2ND FLOOR BLOCK C	X	X
M3-5	? of ??	MECHANICAL PIPING PLAN - 2ND FLOOR BLOCK D	X	X
M4-1	? of ??	ENLARGED FLOOR PLAN - MECH. PENTHOUSE NO.1 BLK. A	X	X
M4-2	? of ??	ENLARGED FLOOR PLAN - MECH. PENTHOUSE NO.2 BLK. C	X	X
M5-1		(RESERVED)		
M6-1	? of ??	MECHANICAL FLOW DIAGRAM - CHILLED WATER	X	X
M6-2	? of ??	MECHANICAL FLOW DIAGRAM - HOT WATER HEATING	X	X
M7-1	? of ??	MECHANICAL DETAILS	X	X
M7-2	? of ??	MECHANICAL DETAILS	X	X
M8-1	? of ??	MECHANICAL SCHEDULES	X	X
M8-2	? of ??	MECHANICAL SCHEDULES	X	X
M8-3	? of ??	MECHANICAL SCHEDULES	X	X
M9-1	? of ??	MECHANICAL CONTROLS	X	X
M9-2	? of ??	MECHANICAL CONTROLS	X	X
ELECTRICAL				
E00-1	? of ??	ELECTRICAL LEGEND	X	X
E00-2	? of ??	GENERAL NOTES AND DEMOLITION NOTES	X	X
E00-3	? of ??	NEW POWER SINGLE LINE SCHEDULES	X	X
E01-1	? of ??	SERVING BOUNDARY & FEEDER ROUTING COMPOSITE PLAN - BASEMENT FLOOR	X	X
E01-2	? of ??	SERVING BOUNDARY & FEEDER ROUTING COMPOSITE PLAN - FIRST FLOOR	X	X
E01-3	? of ??	SERVING BOUNDARY & FEEDER ROUTING COMPOSITE PLAN - SECOND FLOOR	X	X
ES1-1	? of ??	SITE PLAN DEMOLITION	X	X
ES2-1	? of ??	NEW WORK - SITE PLAN	X	X
ES3-1	? of ??	EXISTING PRIMARY SINGLE LINE DIAGRAM	X	X
ES3-2	? of ??	ENLARGED PLAN - UTILITY BUILDING	X	X
ES3-3	? of ??	ELECTRICAL SITE - DETAILS	X	X
ED2-1	? of ??	ELECTRICAL DEMOLITION PLAN - SUB-BASEMENT FLOOR	X	X
ED2-2	? of ??	ELECTRICAL DEMOLITION PLAN - BASEMENT FLOOR - WING A	X	X
ED2-3	? of ??	ELECTRICAL DEMOLITION PLAN - BASEMENT FLOOR - WING B	X	X
ED2-4	? of ??	ELECTRICAL DEMOLITION PLAN - BASEMENT FLOOR - WINGS C&D	X	X
ED2-5	? of ??	ELECTRICAL DEMOLITION PLAN - FIRST FLOOR - WING A	X	X
ED2-6	? of ??	ELECTRICAL DEMOLITION PLAN - FIRST FLOOR - WING B	X	X
ED2-7	? of ??	ELECTRICAL DEMOLITION PLAN - FIRST FLOOR - WINGS C&D	X	X
ED2-8	? of ??	ELECTRICAL DEMOLITION PLAN - SECOND FLOOR - WING A	X	X
ED2-9	? of ??	ELECTRICAL DEMOLITION PLAN - SECOND FLOOR - WING B	X	X
ED2-10	? of ??	ELECTRICAL DEMOLITION PLAN - SECOND FLOOR - WINGS C&D	X	X
EL3-1	? of ??	LIGHTING - OPERATING AND DELIVERY ROOM LAYOUTS - 1/4" SCALE	X	X
EL3-2	? of ??	TYPICAL LIGHTING PLANS - 1/4" SCALE	X	X
EL4-1	? of ??	LIGHTING FIXTURE SCHEDULE & NOTES	X	X

SHEET #	SEQ. #	SHEET TITLE	EFD#	NAVFAC#
EP2-1	? of ??	ELECTRICAL - SUB-BASEMENT FLOOR	X	X
EP2-2	? of ??	ELECTRICAL - BASEMENT FLOOR - WING A	X	X
EP2-3	? of ??	ELECTRICAL - BASEMENT FLOOR - WING B	X	X
EP2-4	? of ??	ELECTRICAL - BASEMENT FLOOR - WINGS C&D	X	X
EP2-5	? of ??	ELECTRICAL - FIRST FLOOR - WING A	X	X
EP2-6	? of ??	ELECTRICAL - FIRST FLOOR - WING B	X	X
EP2-7	? of ??	ELECTRICAL - FIRST FLOOR - WINGS C&D	X	X
EP2-8	? of ??	ELECTRICAL - SECOND FLOOR - WING A	X	X
EP2-9	? of ??	ELECTRICAL - SECOND FLOOR - WING B	X	X
EP2-10	? of ??	ELECTRICAL - SECOND FLOOR - WINGS C&D	X	X
EP5-1	? of ??	ELECTRICAL ROOM LAYOUTS - 1/4" SCALE	X	X
EP5-2	? of ??	ELECTRICAL ROOM LAYOUTS - 1/4" SCALE	X	X
EP6-1	? of ??	NEW POWER SINGLE LINE DIAGRAM	X	X
EP6-2	? of ??	NEW POWER SINGLE LINE DIAGRAM	X	X
EP6-3	? of ??	EXISTING SINGLE LINE DIAGRAM - PART A	X	X
EP6-4	? of ??	EXISTING SINGLE LINE DIAGRAM - PART B	X	X
EP7-1	? of ??	GENERATOR SWITCHGEAR "GS" DETAILS AND ELEVATIONS	X	X
EP7-2	? of ??	GENERATOR SWITCHGEAR DETAILS AND ELEVATIONS	X	X
EP7-3	? of ??	LOAD SHEDDING & GENERATOR CONTROLS	X	X
EP7-4	? of ??	"DES-M" SWITCHGEAR DETAILS AND ELEVATIONS	X	X
EP7-5	? of ??	ATS ELEVATIONS AND SCHEDULES	X	X
EP8-1	? of ??	MCC-N ELEVATIONS AND SCHEDULES	X	X
EP8-2	? of ??	MCC-Q ELEVATIONS AND SCHEDULES	X	X
EP8-3	? of ??	GROUNDING DETAILS	X	X
EP9-1	? of ??	DISTRIBUTION PANELBOARDS SHEET 1 OF 6	X	X
EP9-2	? of ??	DISTRIBUTION PANELBOARDS SHEET 2 OF 6	X	X
EP9-3	? of ??	DISTRIBUTION PANELBOARDS SHEET 3 OF 6	X	X
EP9-4	? of ??	DISTRIBUTION PANELBOARDS SHEET 4 OF 6	X	X
EP9-5	? of ??	DISTRIBUTION PANELBOARDS SHEET 5 OF 6	X	X
EP9-6	? of ??	DISTRIBUTION PANELBOARDS SHEET 6 OF 6	X	X
EP9-10	? of ??	480V PANELBOARDS - NORMAL SYSTEM	X	X
EP9-11	? of ??	480V PANELBOARDS - NORMAL SYSTEM	X	X
EP9-20	? of ??	480V PANELBOARDS - CRITICAL BRANCH	X	X
EP9-21	? of ??	480V PANELBOARDS - CRITICAL BRANCH	X	X
EP9-30	? of ??	480V PANELBOARDS - LIFE SAFETY BRANCH	X	X
EP9-35	? of ??	480V PANELBOARDS - EQUIPMENT BRANCH	X	X
EP9-40	? of ??	208V PANELBOARDS - NORMAL SYSTEM	X	X
EP9-41	? of ??	208V PANELBOARDS - NORMAL SYSTEM	X	X
EP9-50	? of ??	208V PANELBOARDS - CRITICAL BRANCH	X	X
EP9-51	? of ??	208V PANELBOARDS - CRITICAL BRANCH	X	X
EP9-60	? of ??	208V PANELBOARDS - LIFE SAFETY BRANCH	X	X
EP9-65	? of ??	208V PANELBOARDS - EQUIPMENT BRANCH	X	X

SHERLOCK, SMITH & ADAMS, INC.
ARCHITECTS - ENGINEERS
MONTGOMERY, ALABAMA

U.S. NAVAL STATION ROOSEVELT ROADS, P.R.
REPAIRS TO NAVAL HOSPITAL
INDEX OF DRAWINGS

CONSTR. CONTR. NO. | SPECIFICATION NO. | NAVFAC DRWG. NO. | TF NO | SHEET ? OF ??

SEAL AREA

ENG. OV. DR.: DATE: SATISFACTORY TO: DATE:

DESIGN BY: RAS DRAWN BY: FLT
CHK BY: RAS APPROVED:

REVISION DESCRIPTION | DATE

NAVAL FACILITIES ENGINEERING COMMAND
DEPARTMENT OF THE NAVY
NAVY PUBLIC WORKS CENTER, JACKSONVILLE, FL
U.S. NAVAL STATION ROOSEVELT ROADS, P.R.
REPAIRS TO NAVAL HOSPITAL
INDEX OF DRAWINGS

PWC DWG. NO. | NAVFAC DWG. NO. | CONSTR. CONTR. NO.

PLATE NO.
T-2

PWC #

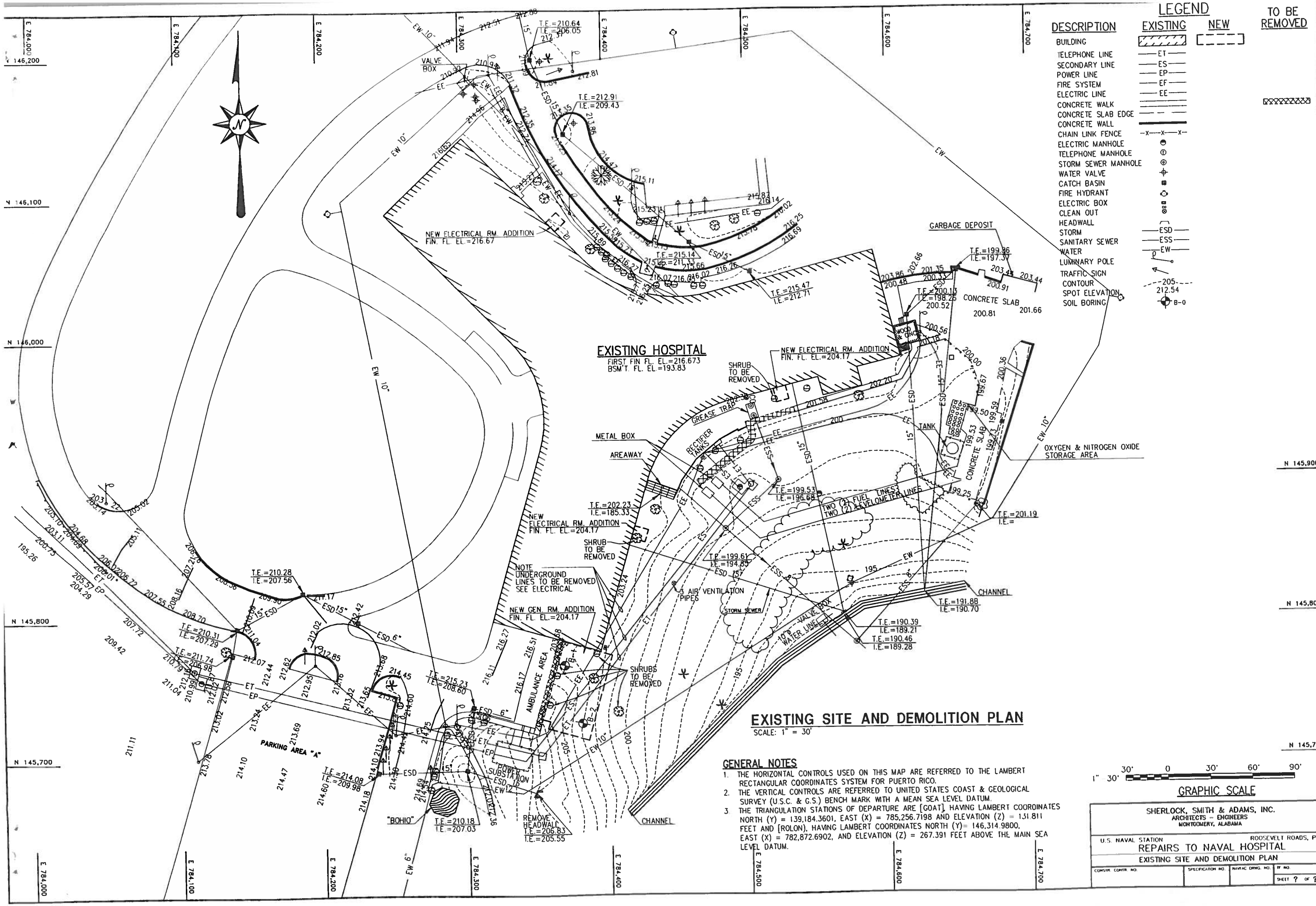

LEGEND

DESCRIPTION	EXISTING	NEW
BUILDING		
TELEPHONE LINE	—ET—	
SECONDARY LINE	—ES—	
POWER LINE	—EP—	
FIRE SYSTEM	—EF—	
ELECTRIC LINE	—EE—	
CONCRETE WALK		
CONCRETE SLAB EDGE		
CONCRETE WALL		
CHAIN LINK FENCE	—x—x—x—	
ELECTRIC MANHOLE		
TELEPHONE MANHOLE		
STORM SEWER MANHOLE		
WATER VALVE		
CATCH BASIN		
FIRE HYDRANT		
ELECTRIC BOX		
CLEAN OUT		
HEADWALL		
STORM	—ESD—	
SANITARY SEWER	—ESS—	
WATER	—EW—	
LUMINARY POLE		
TRAFFIC SIGN		
CONTOUR	205	
SPOT ELEVATION	212.54	
SOIL BORING	B-0	

TO BE REMOVED

EXISTING SITE AND DEMOLITION PLAN

SCALE: 1" = 30'

GENERAL NOTES

1. THE HORIZONTAL CONTROLS USED ON THIS MAP ARE REFERRED TO THE LAMBERT RECTANGULAR COORDINATES SYSTEM FOR PUERTO RICO.
2. THE VERTICAL CONTROLS ARE REFERRED TO UNITED STATES COAST & GEOLOGICAL SURVEY (U.S.C. & G.S.) BENCH MARK WITH A MEAN SEA LEVEL DATUM.
3. THE TRIANGULATION STATIONS OF DEPARTURE ARE [GOAT], HAVING LAMBERT COOROINATES NORTH (Y) = 139,184.3601, EAST (X) = 785,256.7198 AND ELEVATION (Z) = 131.811 FEET AND [ROLON], HAVING LAMBERT COORDINATES NORTH (Y)= 146,314.9800, EAST (X) = 782,872.6902, AND ELEVATION (Z) = 267.391 FEET ABOVE THE MAIN SEA LEVEL DATUM.

1" 30' 30' 0 30' 60' 90'

GRAPHIC SCALE

SHERLOCK, SMITH & ADAMS, INC.
ARCHITECTS – ENGINEERS
MONTGOMERY, ALABAMA

U.S. NAVAL STATION ROOSEVELT ROADS, P.R.
REPAIRS TO NAVAL HOSPITAL
EXISTING SITE AND DEMOLITION PLAN

CONSTR. CONTR. NO. | SPECIFICATION NO. | NAVFAC DRWG. NO. | TF NO. | SHEET ? OF ??

DRAWN BY: DB
DESIGN BY:
CHK. BY: SBG
APPROVED:
ENG. DIV. DIR.:
DATE:
SATISFACTORY TO:
DATE:

REVISION DESCRIPTION	DATE

NAVAL FACILITIES ENGINEERING COMMAND
DEPARTMENT OF THE NAVY
NAVY PUBLIC WORKS CENTER, JACKSONVILLE, FL
U.S. NAVAL STATION ROOSEVELT ROADS, P.R.
REPAIRS TO NAVAL HOSPITAL
EXISTING SITE AND DEMOLITION PLAN

PLATE NO. C-1
PWC DWG. NO.
NAVFAC DWG. NO.
CONSTR. CONTR. NO.

PWC #

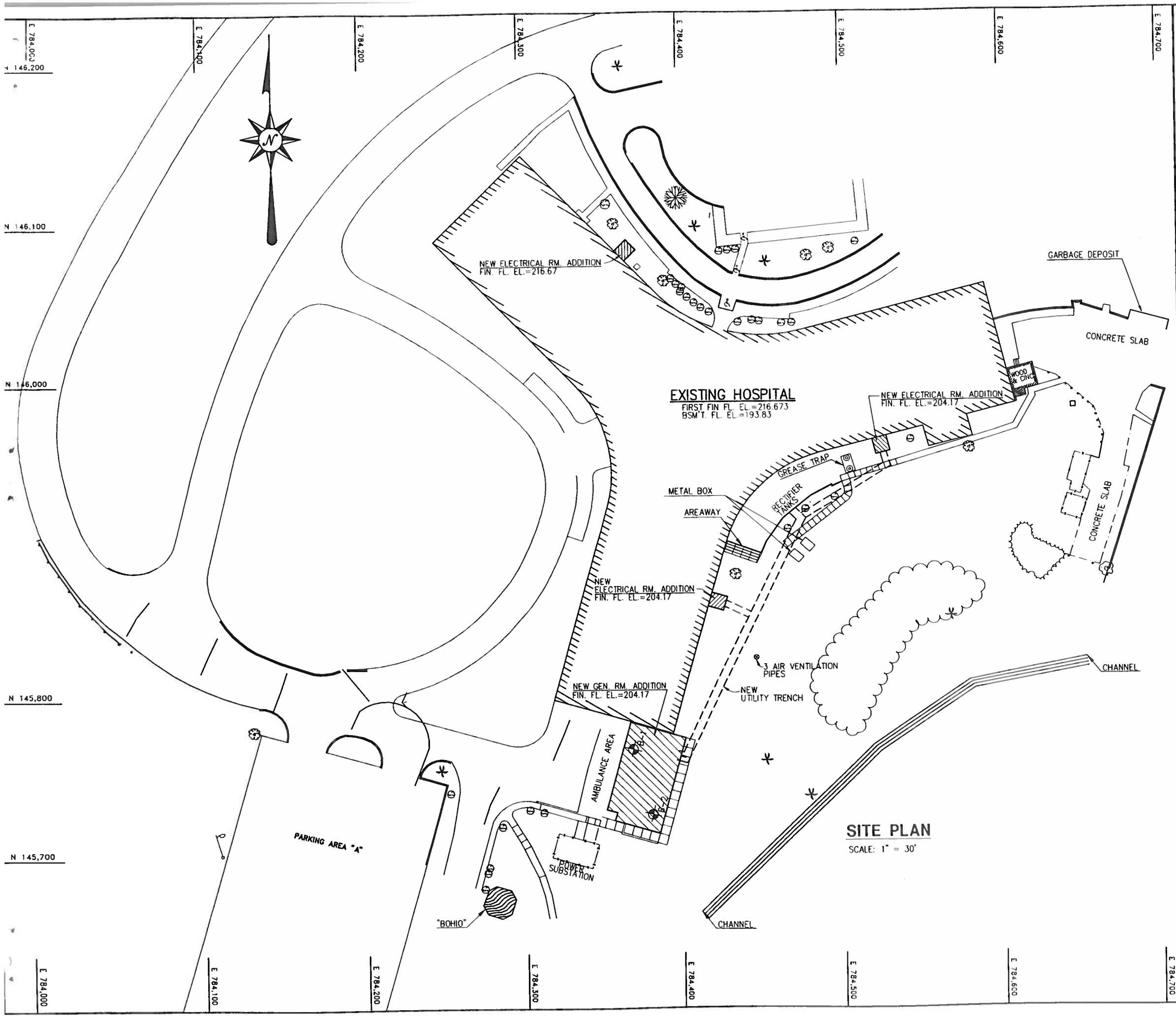

SHERLOCK, SMITH & ADAMS, INC.
ARCHITECTS – ENGINEERS
MONTGOMERY, ALABAMA

U.S. NAVAL STATION ROOSEVELT ROADS, P.R.
REPAIRS TO NAVAL HOSPITAL
SITE PLAN

CONSTR. CONTR. NO. | SPECIFICATION NO. | NAVFAC DRWG. NO. | IF NO | SHEET ? OF ??

PLATE NO. C-2

PWC #

SEAL AREA

EXC. OV. DIR.: DATE: SATISFACTORY TO: DATE:

DRAWN BY: DB
APPROVED:
DESIGN BY:
CHK. BY: SBG

REVISION DESCRIPTION | DATE

NAVAL FACILITIES ENGINEERING COMMAND
DEPARTMENT OF THE NAVY
NAVY PUBLIC WORKS CENTER, JACKSONVILLE, FL
U.S. NAVAL STATION ROOSEVELT ROADS, P.R.
REPAIRS TO NAVAL HOSPITAL
SITE PLAN

PWC DWG. NO. | NAVFAC DWG. NO. | CONSTR. CONTR. NO.

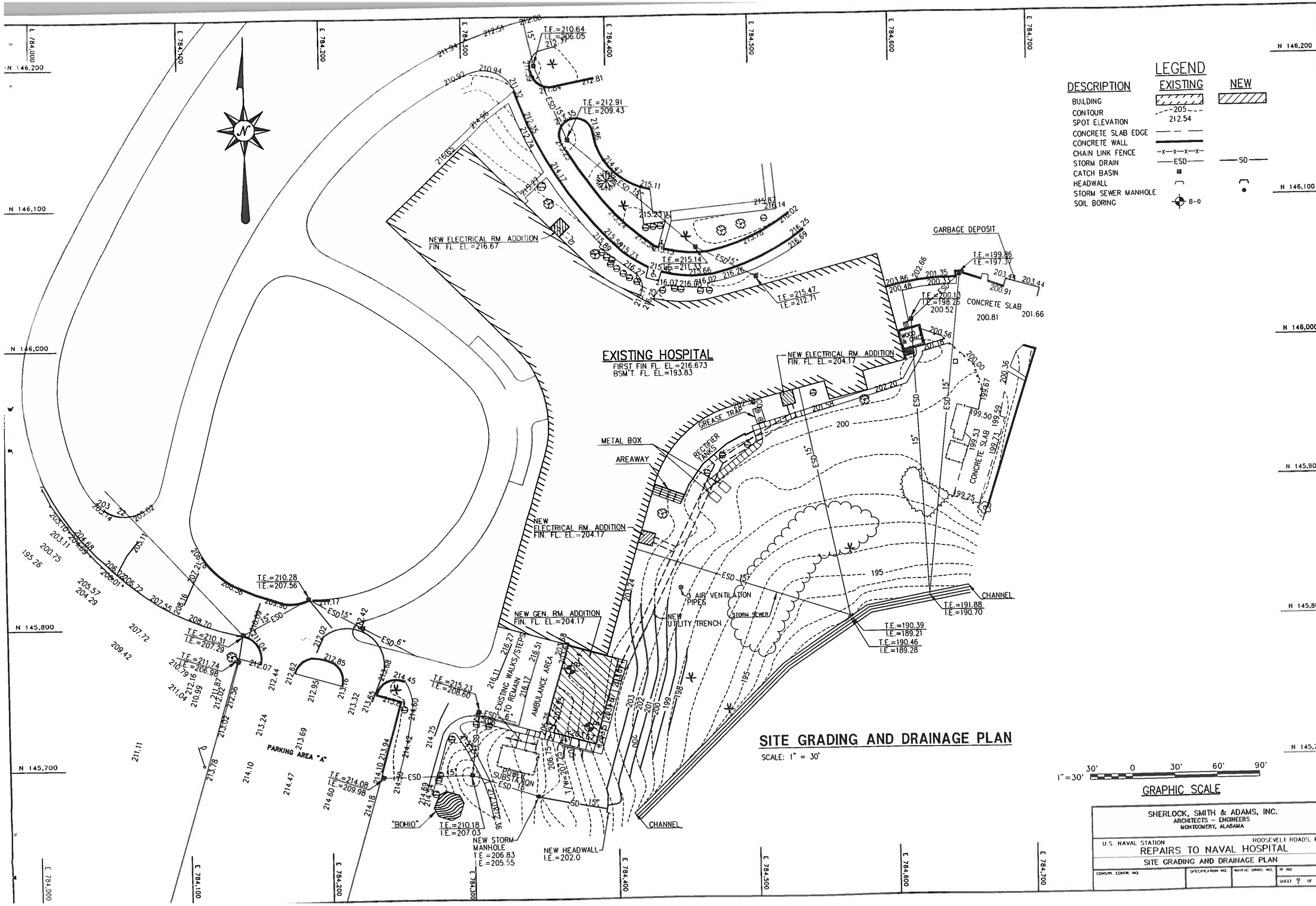

LEGEND

DESCRIPTION	EXISTING	NEW
BUILDING		
CONTOUR	205	
SPOT ELEVATION	212.54	
CONCRETE SLAB EDGE		
CONCRETE WALL		
CHAIN LINK FENCE	-X-X-X-X-	
STORM DRAIN	ESD	SD
CATCH BASIN		
HEADWALL		
STORM SEWER MANHOLE		
SOIL BORING	B-0	

SITE GRADING AND DRAINAGE PLAN

SCALE: 1" = 30'

1"=30' 30' 0 30' 60' 90'

GRAPHIC SCALE

SHERLOCK, SMITH & ADAMS, INC.
ARCHITECTS – ENGINEERS
MONTGOMERY, ALABAMA

U.S. NAVAL STATION ROOSEVELT ROADS, P.R.
REPAIRS TO NAVAL HOSPITAL
SITE GRADING AND DRAINAGE PLAN

CONSTR. CONTR. NO. | SPECIFICATION NO. | NAVFAC DRWG. NO. | TF NO | SHEET ? OF ??

SEAL AREA

DATE | REVISION DESCRIPTION | ENG. DIV. OR: | DATE: | SATISFACTORY TO: | DATE: | DRAWN BY: DB | DESIGN BY: | CHK. BY: SBG | APPROVED:

DEPARTMENT OF THE NAVY
NAVAL FACILITIES ENGINEERING COMMAND
NAVY PUBLIC WORKS CENTER, JACKSONVILLE, FL

U.S. NAVAL STATION ROOSEVELT ROADS, P.R.
REPAIRS TO NAVAL HOSPITAL
SITE GRADING AND DRAINAGE PLAN

PLATE NO. C-3

PWC #

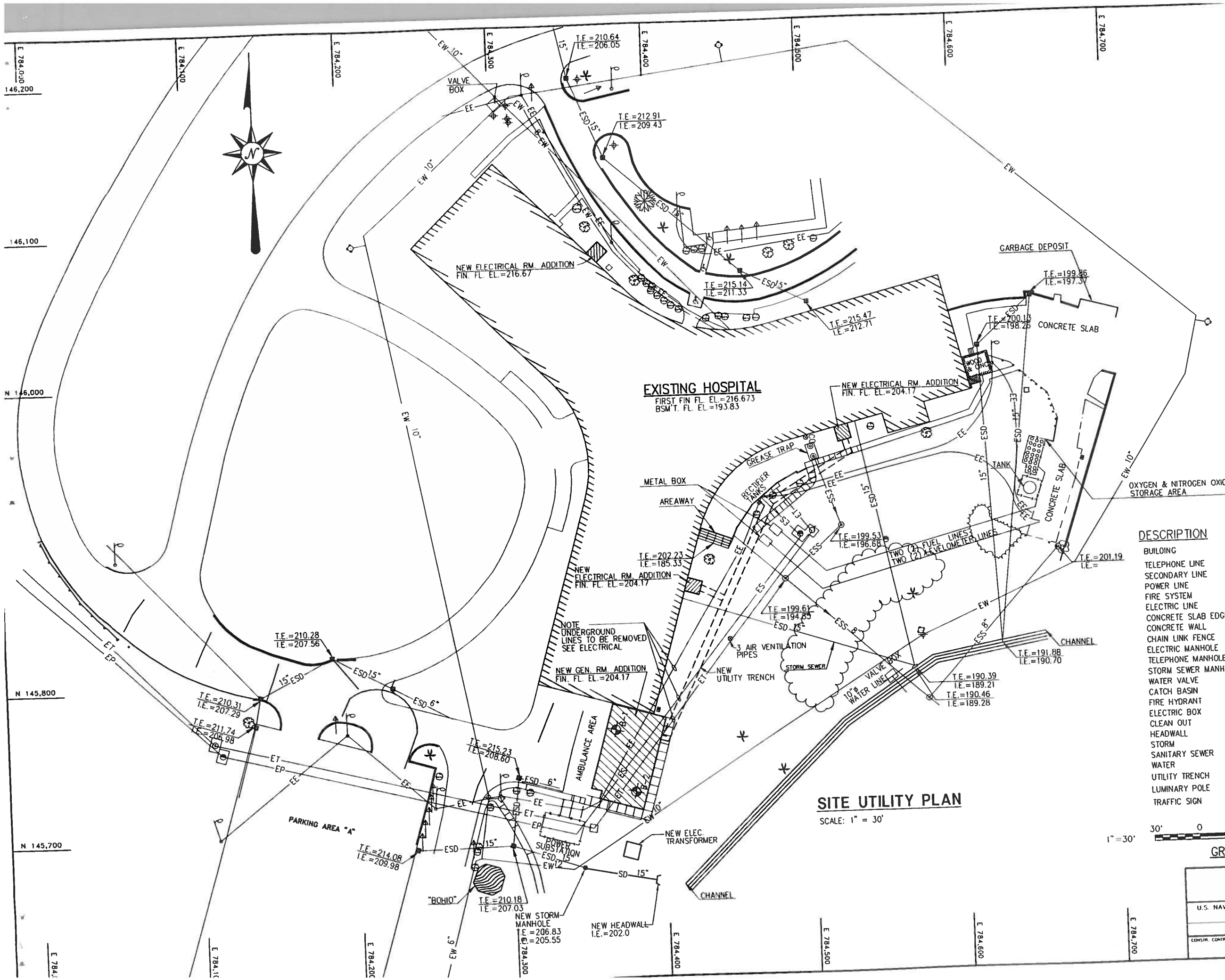

SHERLOCK, SMITH & ADAMS, INC.
ARCHITECTS – ENGINEERS
MONTGOMERY, ALABAMA

U.S. NAVAL STATION ROOSEVELT ROADS, P.R.
REPAIRS TO NAVAL HOSPITAL
SITE UTILITY PLAN

CONSTR. CONTR. NO. | SPECIFICATION NO. | NAVFAC DRWG. NO. | TF NO. | SHEET ? OF ??

PLATE NO. C-4

PWC #

DEPARTMENT OF THE NAVY
NAVAL FACILITIES ENGINEERING COMMAND
NAVY PUBLIC WORKS CENTER, JACKSONVILLE, FL
U.S. NAVAL STATION ROOSEVELT ROADS, P.R.
REPAIRS TO NAVAL HOSPITAL
SITE UTILITY PLAN

REVISION DESCRIPTION | DATE

ENG. DIV. DIR.: DATE:
SATISFACTORY TO: DATE:
DRAWN BY: DB
DESIGN BY: APPROVED:
CHK BY: SBG

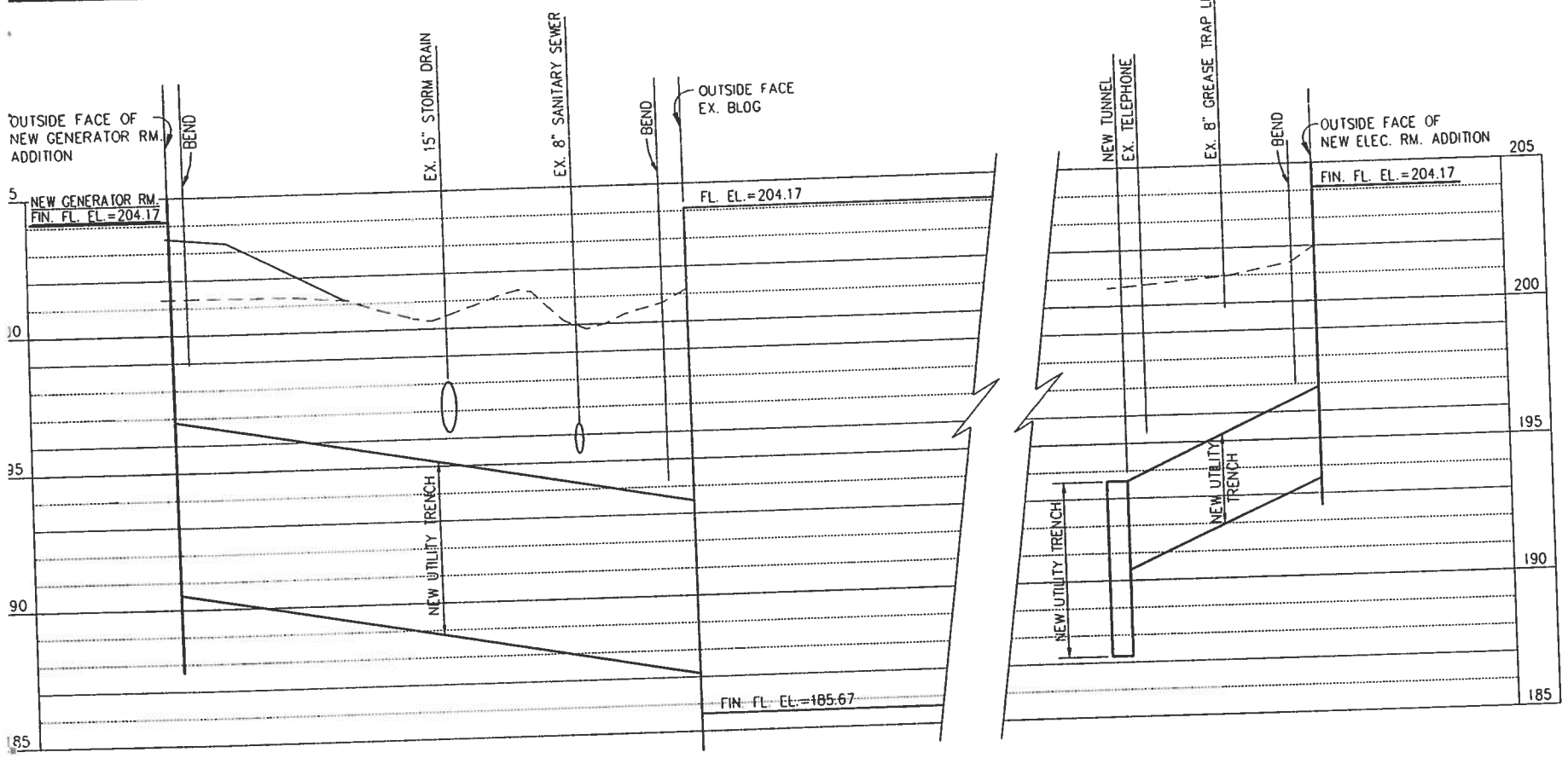

PROFILE OF NEW UTILITY TRENCH

SCALES ——— HORIZONTAL: 1"=30'
VERTICAL: 1"=3'

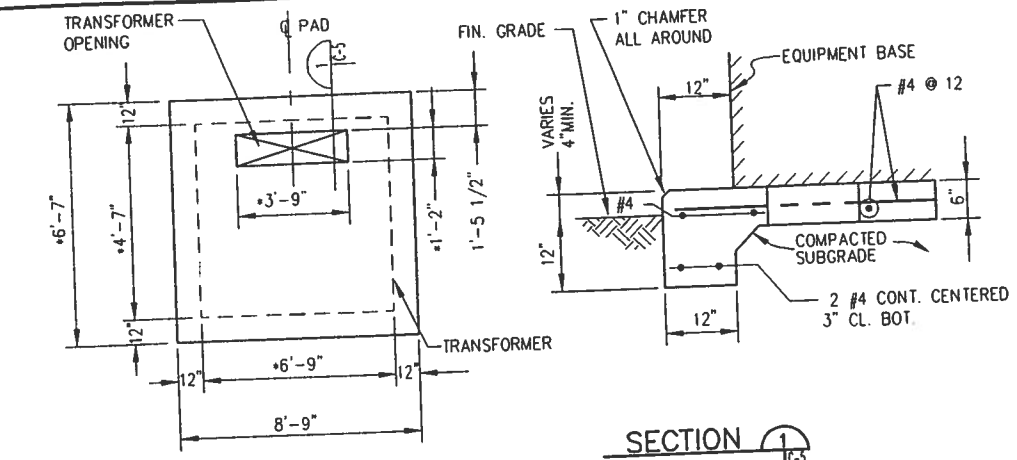

*PAD SIZE SHOWN IS FOR BID PURPOSES ONLY. ACTUAL PAD SIZES SHALL BE IN ACCORDANCE WITH THE REQUIREMENTS OF EQUIPMENT FURNISHED PLUS THE CLEARANCE DISTANCES INDICATED.

SECTION 1 C-5
NO SCALE

PLAN OF TRANSFORMER PAD

NOT TO SCALE

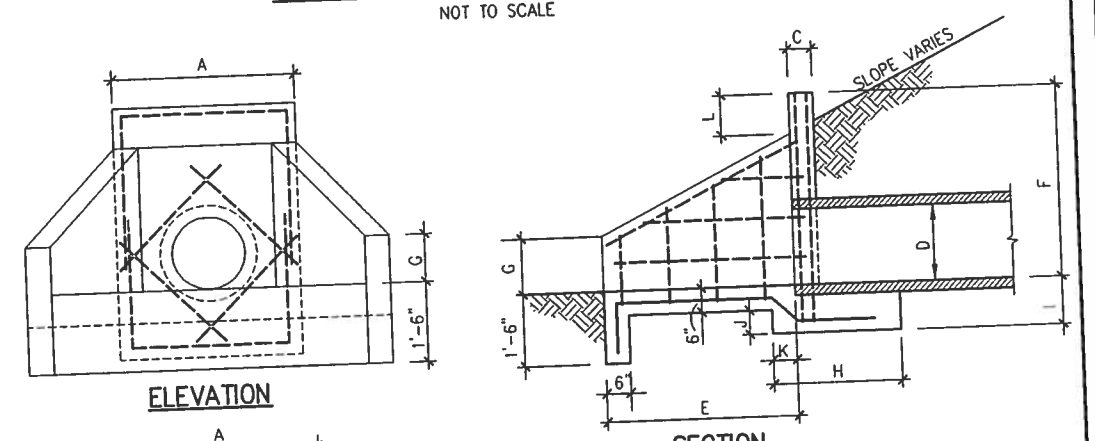

ELEVATION

SECTION

NOTES:
1. ALL REINFORCING BARS SHALL BE #4@12" EW, OR AS SHOWN. MINIMUM CLEAR COVER OVER REINFORCING SHALL BE 1½".
2. BEND FLOOR BARS AT WALLS UP VERTICALLY INTO WALLS.
3. CHAMFER ALL EXPOSED EDGES ¾".

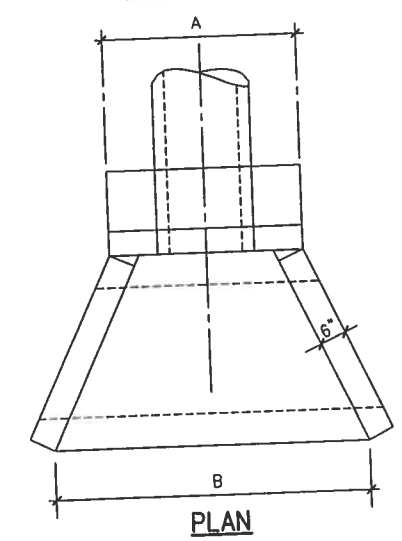

PLAN

TYPICAL HEADWALL DETAIL

NOT TO SCALE

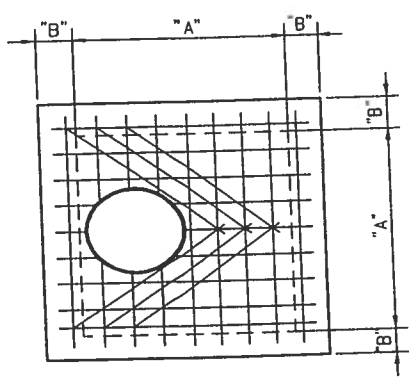

PLAN
NOT TO SCALE

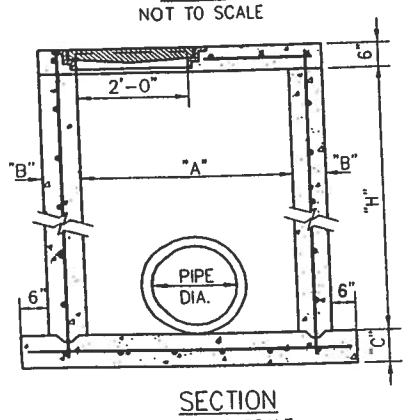

SECTION
NOT TO SCALE

DETAIL OF MANHOLE

NOT TO SCALE

NOTES:
1. CONCRETE SHALL HAVE A COMPRESSIVE STRENGTH OF 3000 PSI @ 28 DAYS.
2. REINFORCING BARS SHA;; MEET ASTM A615 OR A617 FRADE 40.

DIMENSIONS				REINFORCEMENT				
				WALLS		BOT. SLAB	TOP SLAB	
"H"	"A"	"B"	"C"	HORIZ	VERT	EA. WAY	EA. WAY	DIAG.
0' TO 10'	3'	6"	8"	#4@12"	#4@12"	#4@12"	#5@8"	
11' TO 20'	3'	8"	10"	#4@12"	#4@12"	#4@12"	#5@8"	
0' TO 8'	4' TO 6'	6"	8"	#4@8"	#4@12"	#4@12"	#5@8"	3 #4@6"
10'	4' TO 6'	6"	8"	#4@6"	#4@12"	#4@10"	#5@8"	3 #4@6'
12'	4' TO 6'	8"	10"	#4@8"	#4@12"	#4@10"	#5@8"	3 #4@6"
14'	4' TO 6'	8"	10"	#4@7"	#4@12"	#4@9"	#5@8"	3 #4@6"
16'	4' TO 6'	8"	10"	#4@6"	#4@12"	#4@8"	#5@8"	3 #4@6"
18'	4' TO 6'	8"	10"	#4@5"	#4@12"	#5@11"	@5@8"	3 #4@6"
20'	4' TO 6'	8"	10"	#4@4-1/2"	#4@12"	#5@10"	@5@8"	3 #4@6"

TABLE I

FOOTING DIMENSIONS

D	A	B	C	E	F	G	H	I	J	K	L
15"	3'-0"	5'-0"	6"	3'-0"	2'-10"	0'-9"	2'-0"	1'-0"	0'-6"	0'-6"	7½"
18"	3'-0"	5'-0"	6"	3'-6"	3'-0"	0'-9"	2'-0"	1'-0"	0'-6"	0'-6"	7½"
24"	4'-0"	7'-0"	6"	4'-6"	3'-8"	1'-0"	2'-0"	1'-0"	0'-6"	0'-6"	7½"
30"	4'-6"	8'-6"	8"	5'-6"	4'-3"	1'-0"	2'-0"	1'-0"	0'-6"	0'-6"	7½"
36"	5'-0"	10'-0"	8"	6'-0"	4'-9"	1'-6"	2'-0"	1'-0"	0'-6"	0'-6"	7½"
42"	5'-8"	11' 0"	8"	6'-6"	5'-3"	1'-6"	2'-6"	1'-3"	0'-9"	1'-0"	7½"
48"	6'-0"	14'-0"	8"	7'-6"	5'-9"	2'-0"	2'-6"	1'-3"	0'-9"	1'-0"	7½"

SHERLOCK, SMITH & ADAMS, INC.
ARCHITECTS – ENGINEERS
MONTGOMERY, ALABAMA

U.S. NAVAL STATION ROOSEVELT ROADS, P.R.
REPAIRS TO NAVAL HOSPITAL
DETAILS

CONSTR. CONTR. NO. | SPECIFICATION NO. | NAVFAC DRWG. NO. | TF NO | SHEET ? OF ??

REVISION DESCRIPTION | DATE | ENG. DIV. DIR. | DATE | SATISFACTORY TO: | DATE | DESIGN BY: SBG | DRAWN BY: DB | CHK BY: SBG | APPROVED:

DEPARTMENT OF THE NAVY
NAVAL FACILITIES ENGINEERING COMMAND
NAVY PUBLIC WORKS CENTER, JACKSONVILLE, FL
U.S. NAVAL STATION ROOSEVELT ROADS, P.R.
REPAIRS TO NAVAL HOSPITAL
DETAILS

PLATE NO C-5
PWC DWG. NO.
NAVFAC DWG. NO.
PWC #

ABBREVIATIONS

A	
@	AT
A.T.	ACOUSTIC TILE
A.V.	AUDIO-VISUAL
A/C	AIR-CONDITIONING
ACT	ACOUSTICAL CEILING TILE
ADDMX	ADD MIXTURE
ADJ	ADJACENT
ADMIN	ADMINISTRATION
AFF	ABOVE FINISHED FLOOR
ALUM.	ALUMINUM
AMB	AMBULANCE, AMBULATORY
ANCH	ANCHOR
ANES	ANESTHESIOLOGY
ANES EQ.	ANESTHESIOLOGY EQUIPMENT,
WK. & OFF	WORKROOM, AND OFFICES
ANESTH	ANESTHESIOLOGY
APPR	APPROXIMATE
APPROX	APPROXIMATE
ASST	ASSISTANT
AUTOCL	AUTOCLAVE
B	
B.U.	BUILT UP
BASE	BASEMENT
BLDG	BUILDING
BLKG	BLOCKING
BRCKT	BRACKET
BRK MTL	BRAKE METAL
BTM	BOTTOM
C	
C. SEC.	CAESARIAN SECTION
C/L	CENTER LINE
CAB.	CABINET
℄	CENTERLINE
CEIL.	CEILING
CG	CORNER GUARD
C.G.	CLEANING GEAR (JANITOR'S CLOSET)
CHAP	CHAPEL
CHART'G	CHARTING
CL. UTIL.	CLEAN UTILITIES
CLG	CEILING
CLIN	CLINIC
CLIN ADMIN	CLINIC ADMINISTRATION
CLINC	CLINIC
CLINIC PSYCH	CLINICAL PSYCHIATRIST
CLOS	CLOSET
CLR	CLEAR
CMD EVAL	COMMAND EVALUATION
CMU	CONCRETE MASONRY UNIT
COL.	COLUMN
COMD MASTR CHF	COMMAND MASTER CHIEF
CONC	CONCRETE
CONF	CONFERENCE
CONFIG	CONFIGURATION
CONST	CONSTRUCTION
CONT	CONTINUOUS
COORD	COORDINATOR
CORR	CORRIDOR
CP	CARPET
CPT	CARPET
CRS	CORROSION RESISTANT STEEL
CS	CONCEALED SPLINE
CSR	CENTRAL SUPPLY ROOM
CT	CERAMIC TILE
CW	CAN WASHER
CWT	COUNTER WEIGHT
D	
DBL	DOUBLE
DEMO	DEMOLITION
DENT	DENTAL
DEPT	DEPARTMENT
DET	DETAIL
DTL	DETAIL
DICT	DICTATION
DIM	DIMENSIONS
DIR	DIRECTOR
DISP	DISPOSAL
DISTRIB	DISTRIBUTOR
DK. RM.	DARK ROOM
DN	DOWN
DR'S	DOCTOR'S
DR.	DOCTOR
DRESS	DRESSING
E	
E.W.C.	ELECTRIC WATER COOLER
ED	ELAPSED DAYS
ED/TRAINING	EDUCATION/TRAINING
EDUC	EDUCATION
EKG	ELECTROCARDIOGRAM
ELEC	ELECTRICAL
EA.	EACH
ELECT	ELECTRICAL
ELEV	ELEVATION
EMERG	EMERGENCY
EMERG	EMERGENCY DEPARTMENT
EMERG KIT	EMERGENCY KIT
EMS	EMERGENCY MEDICAL SERVICE
ENT	EAR, NOSE, AND THROAT
EQ	EQUAL
EQT	EXIST. QUARRY TILE
EQUIP	EQUIPMENT
ER	EMERGENCY ROOM
ES	EACH SIDE
ETR	EXISTING TO REMAIN
EX	EXTERIOR
EX	EXISTING
EX	EXAMINATION
EXAM	EXAMINATION
EXIST	EXISTING
EXP	EXPOSED
EXT	EXTINGUISHER
EXT	EXTERIOR
EXTG	EXISTING
F	
F. LKRS	FEMALE LOCKERS
F.E.	FIRE EXTINGUISHER
FEC	FIRE EXTINGUISHER CABINET
F.R.	FIRE RESISTANCE
F.T.	FEMALE TOILETS
FAC MGT	FACILITIES MANAGEMENT
FACIL MGT	FACILITIES MANAGEMENT
FAM PRAC CLIN	FAMILY PRACTICE CLINIC
FHMS	FLAT HEAD METAL SCREWS
FIN	FINISH
FLD	FIELD
FLD VER	FIELD VERIFY
FLR	FLOOR
FURR	FURRING
FV	FIRE VALVE
G	
G'MENT	GOVERNMENT
GA	GAUGE
GBP	GYPSUM BOARD PAINTED
GRND	GROUND
GWL	GYPSUM WALLBOARD,W/ LIQUID GLAZE COATING
GWP	GYPSUM WALLBOARD, PAINTED
GWV	GYPSUM WALLBOARD,W/ VINYL FABRIC COVERING
GYN	GYNECOLOGY
GYP. BD	GYPSUM BOARD
GYP. BRD.	GYPSUM BOARD
GFCI	GOVERNMENT FURNISHED CONTRACTOR INSTALLED
GFGI	GOVERNMENT FURNISHED GOVERNMENT INSTALLED
H	
HC	HANDICAPPED
HC	HAT CHANNEL
HGT	HEIGHT
HM	HOLLOW METAL
HOL	HOLLOW
HORZ	HORIZONTAL
HR	HOUR
HRDWD	HARDWOOD
HVAC	HEATING, VENTING, AIR-CONDITIONING
HYG	HYGIENE
I	
I.V.	INTEGRAL BASE W/ SHEET VINYL FLOOR
IAW	IN ACCORDANCE WITH
ICU	INTENSIVE CARE UNIT
IMPROV	IMPROVEMENT
INFO	INFORMATION
INGRED	INGREDIENT
INSUL	INSULATION
INT COM SHP	INTERCOMMUNICATION SHOP
INTEL	INTELLIGENCE
INTERN MED CLIN	INTERNAL MEDICINE CLINIC
ISOL	ISOLATION
J	
JNT OCC	JOINT OCCUPANCY
JSN	JOINT SCHEDULE NUMBER
JT	JOINT
JNT	JOINT
K	
KCP	KEENE CEMENT PLASTER
KIT	KITCHEN
L	
L. & W.	LINEN AND WARD
L.P.O.	LEAVING PETTY OFFICER
LAB	LABORATORY
LAC	LAY-IN ACOUST. CLG.
LAM	LAMINATE
LKRS	LOCKERS
LNGE	LOUNGE
LLV	LONG LEG VERTICAL
M	
M. LKRS	MALE LOCKERS
M.T.	MALE TOILETS
MAIL RM	MAIL ROOM
MAINT	MAINTENANCE
MAINT SHP	MAINTENANCE SHOP
MANUF	MANUFACTURER
MAN PWR	MAN POWER
MAT	MATERIAL
MAX	MAXIMUM
MECH	MECHANICAL
MED	MEDICAL
MED EQP SHP	MEDICAL EQUIPMENT SHOP
MED LIBR	MEDICAL LIBRARY
MED REC	MEDICAL RECORDS
MED REC (COMP)	MEDICAL RECORDS (COMPRESSED)
MFR	MANUFACTURER
MGR	MANAGER
MGT	MAT GLAZED TILE
MGT	MANAGEMENT
MIN.	MINIMUM
MISC.	MISCELLANEOUS
MTD	MOUNTED
MTL	METAL
N	
N.I.C.	NOT IN CONTRACT
N.S.	NURSE STATION
N.T.S.	NOT TO SCALE
N/A	NOT APPLICABLE
NFPA	NATIONAL FIRE PROTECTION ASSOCIATION
NO.	NUMBER
NUTR	NUTRITION
O	
O.B.	OBSTETRICS
O.C.	ON CENTER
O.D.	ON DUTY
OD	OUTSIDE DIAMETER
O.O.D.	OFFICER OF THE DAY
O.P.	OUT PATIENT
O.R.	OPERATING ROOM
OB	OBSTETRICS
OFF	OFFICE
OM	OWNER MOVE
OP	OUTPATIENT
OPNG	OPENING
OPP	OPPOSITE
OPPS & MED INTEL	OPERATIONS AND MEDICAL INTELLIGENCE
OPTHA	OPHTHALMOLOGIST
ORTHO CLIN	ORTHOPEDIC CLINIC
P	
P.T.	PRESSURE TREATED
PARA	PARAGRAPH
PAT ADMIN	PATIENT ADMINISTRATION
PATH.	PATHOLOGY
PEDS	PEDIATRICS
PETOF	PETTY OFFICER
PG	PLEXIGLASS
PHARM	PHARMACY
PHOTO.	PHOTOGRAPHY
PHY THER	PHYSICAL THERAPY
PL	PLASTER
PLP	PLASTER, PAINTED
PLAS	PLASTIC
PLYWD	PLYWOOD
PN	PANELLING
PP	PLASTER PATCH & PAINT
PREFAB	PREFABRICATED
PREP	PREPARATION
PSYCH	PSYCHIATRIST
PT	PHYSICAL THERAPY
PTD	PAINTED
PTM	PATCH TO MATCH (AND PAINT)
PUB. TELE.	PUBLIC TELEPHONE
PVC	POLYVINYL CHLORIDE
Q	
QT	QUARRY TILE
QUAL	QUALITY
QUAL IMPR	QUALITY IMPROVEMENT
R	
R.C.	REFLECTED CEILING
RCP	REFLECTED CEILING PLAN
R/A	RETURN AIR
RAD	RADIOLOGY, RADIUSED
R	RUBBER BASE
RB	RUBBER BASE
RCD	RECORDS
REC	RECOVERY
REF	REFERENCE
REF	REFRIGERATOR
REFRIG	REFRIGERATOR
REHAB	REHABILITATION
REINF	REINFORCEMENT
REINF	REINFORCED
REL	RELOCATED
REQ'D	REQUIRED
RESP	RESPIRATORY
REV	REVERSED
RM	ROOM
S	
SCHEO	SCHEDULES
S LINEN	SOILED LINEN
S. UTL	SOILED UTILITIES
SEC'Y	SECRETARY
SEC. LAB.	SECTION LABORATORY
SECT.	SECRETARY
SERV. OFF.	SERVICES OFFICER
SF	SQUARE FEET
SHT	SHEET
SIM	SIMILAR
SOIL	SOILED
SPRNK	SPRINKLER
SQ	SQUARE
SR	SENIOR
SS	STAINLESS STEEL
STA	STATION
STC	SOUND TRANSMISSION CLASS
STD	STANDARD
STER	STERILIZER
STL	STEEL
STOR	STORAGE
STRET	STRETCHER
STRUC	STRUCTURE
SUB-STER.	SUB-STERILE
SUP	SUPPORT
SUPERV	SUPERVISOR
SUPP	SUPPLY
SUPP CARE	SUPPLEMENTAL CARE
SUPV	SUPERVISOR
SUR	SURGICAL
SURG	SURGERY
SV	SHEET VINYL
SVC	SERVICE
SWING SPCS	SWING SPACES
T	
T & S	TOILET AND SHOWER
T.	TOILET
TECH	TECHNICIAN
TEL.	TELEPHONE
TEMP	TEMPERED
THER	THERAPY
THK	THICK
TLT	TOILET
TMT	TREATMENT
TRANS	TRANSFORMER
TRAUM	TRAUMA
TREAT.	TREATMENT
TS	TUBULAR STEEL
TYP.	TYPICAL
TV	TELEVISION
U	
UFAS	UNIFORM FEDERAL ACCESSIBILITY STANDARDS
UR	UROLOGY
UTIL	UTILITY
V	
V.W.F.	VINYL WALL FABRIC
V.W.C.	VINYL WALL COVERING
VAT	VINYL ASBESTOS TILE
VCT	VINYL COMPOSITION TILE
VEG	VEGETABLE
VERT.	VERTICAL
VEST	VESTIBULE
W	
W.C.	WHEELCHAIR
W.V.	WELDED VINYL
W/	WITH
W/C	WHEELCHAIR
WASH	WASHING
WD.	WOOD
WDW	WINDOW
WHEEL CH	WHEEL CHAIR
WHSE	WAREHOUSE
WTG	WAITING
WWM	WOVEN WIRE MESH

MATERIALS LEGEND

- EARTH
- CONCRETE
- GRAVEL
- C.M.U.
- RIGID INSUL.
- GYPSUM BOARD OR SAND
- GLASS
- STEEL
- ALUMINUM
- SHEET METAL
- FINISHED WOOD
- ROUGH WOOD
- PLYWOOD
- BATT INSULATION
- PRECAST CONCRETE

DRAWING TAG INDICATIONS

6 — DETAIL NUMBER
A9-5 | A9-5 — SHEET NUMBER WHERE DRAWN; SHEET NUMBER WHERE SECTION SHOWN

DETAILS & SECTION CUT LOCATION MARKER

11
A15-3 | A15-10

ELEVATION DESIGNATION & LOCATION MARKER

B
A13-5 | A13-6

DETAIL DESIGNATION MARKER

FLOOR LEVEL
ELEVATION

ELEVATION MARKER

A 3

COLUMN REFERENCE MARKERS

CLINIC LOBBY B102
ROOM NAME
ROOM NUMBER
BLOCK DESIGNATION

ROOM DESIGNATION MARKER

ENG. DIV. DIR.	
DATE:	
SATISFACTORY TO:	
DATE:	
DRAWN BY: FLT	
DESIGN BY: RAS	
CHK BY: RAS	
APPROVED:	
DATE	REVISION DESCRIPTION

NAVAL FACILITIES ENGINEERING COMMAND
DEPARTMENT OF THE NAVY
NAVY PUBLIC WORKS CENTER, JACKSONVILLE, FL
U.S. NAVAL STATION ROOSEVELT ROADS, P.R.
REPAIRS TO NAVAL HOSPITAL
ABBREVIATIONS / LEGENDS / NOTES

PWC DWG. NO.
NAVFAC DWG. NO.

SHERLOCK, SMITH & ADAMS, INC.
ARCHITECTS – ENGINEERS
MONTGOMERY, ALABAMA

U.S. NAVAL STATION ROOSEVELT ROADS, P.R.
REPAIRS TO NAVAL HOSPITAL
ABBREVIATIONS / LEGENDS / NOTES

CONTR. CONTR. NO. | SPECIFICATION NO. | NAVFAC DWNG. NO. | TF NO. | SHEET ? OF ??

PLATE NO.
A0-1

PWC. #

ID	PHASE	OWNER MOVE	TASK	DURATION
1			NOTICE TO PROCEED	
2	A		SITE UTILITIES SEQUENCE	60ed
3	A1		MOBILIZE CONTRACTOR	30ed
4	A2		REROUTING OF UNDERGROUND TELEPHONE & SECONDARY POWER / SET TEMPORARY TRANSFORMER	
5				
6	B		NEW ADDITIONS CONSTRUCTION SEQUENCE	270ed
7	B1		CONSTRUCT GENERATOR / CHILLER SYSTEMS ADDITION	150ed
8	B2		CONSTRUCT ELECTRICAL ROOM TOWERS	14ed
9		OMB1	BASEMENT: ED. DEPT. OFF.#A025 & MED. LIBRARY #A026 SWING TO CONF. RM. #A044	8ed
10		OMB2	1ST. FLR.: COAST GUARD LIAISON #0123 PERMINENT MOVE TO RM #3C134 / UROLOGY SWINGS IN W/ FAMILY	
11			PRAC. CLINIC / PEDS EXAM #C161, #C163 & FAMILY PRAC. EXAM #A140 DISCONTINUE USE TEMPORARILY.	8ed
12		OMB3	2ND. FLR.: GYN.4-BED ROOM #A243 SWINGS TO MSPU 4-BED ROOM #B220 / DENTAL ROOM #D201A, #D229,	
13			#D230 MOVE TO DENTAL CLINIC / MENTAL HEALTH OFF #B225 SWINGS INTO VACATED DENTAL SPACE /	
14			ANESTH OFF.#C231 TO SWING INTO MSPU 4-BED ROOM #C241.	30ed
15	B3		CONSTRUCT TEMPORARY CONSTRUCTION BARRIERS / PARTITIONS	60ed
16	B4		DEMO LIMITED CEILINGS & ABATE ASBESTOS ALL FLOORS	120ed
17	B5		RUN ELECTRICAL FEEDERS & REPLACE LIMITED CEILINGS ALL FLOORS / JOINT OCCUPANCY IN KITCHEN	
18			AND CIRCULATION AREAS.	14ed
19		OMB4	SWING MOVES FROM OMB1, OMB2 & OMB3 TO RETURN TO ORIGINAL LOCATIONS	45ed
20	B6		INSTALL EXAM LIGHTS & EMERGENCY RECEPTACLES IN PATIENT ROOMS ON 2ND FLOOR.	
21				
22	C		EXISTING ELECTRICAL & MECHANICAL EQUIPMENT DEMOLITION SEQUENCE	90ed
23	C1		SUB-BASEMENT: DEMO GENERATOR, 1 BOILER, CHILLERS, HOT WATER GENERATING SYSTEM, AND	
24			ASSOC. PUMPS & PIPING / ROOF: DEMO COOLING TOWERS, CHILLER AND ASSOCIATED PUMPS & PIPING.	
25				
26	D		AIR HANDLING UNIT #3 SEQUENCE	30ed
27	D1		INSTALL NEW AHU#3A & AHU#3B ON ROOF / INSTALL NEW BOILER, STEAM GENERATOR AND ASSOCIATED	
28			PUMPS & PIPING IN THE SUB-BASEMENT	8ed
29		OMD1	OWNER TO DISCONTINUE USE OF O.R.#1, DELIVERY ROOM #1 & 1/2 OF SCU / EQUIPMENT TO BE MOVED	
30			TO STORAGE.	45ed
31	D2		INSTALL ASSOCIATED DUCTWORK, FILTERS & PIPING FOR AHU#3B / REPLACE CEILINGS & LIGHTING IN	
32			O.R.#1, DELIVERY ROOM #1, & 1/2 OF SCU.	8ed
33		OMD2	OWNER TO MOVE BACK INTO O.R.#1, DELIVERY ROOM #1, & 1/2 OF SCU.	8ed
34		OMD3	DISCONTINUE USE OF O.R.#2 & #3, DELIVERY ROOM #2, LABOR ROOM #D218 & 1/2 OF SCU / SWING O.R.	
35			RECOVERY TO SCU & SWING PREMY NURSERY #A246 & ISOL. NURSERY #A247 TO OB 4-BED RM #A230.	
36	D3		INSTALL ASSOC. DUCTWORK, FILTERS & PIPING FOR AHU#3A / REPLACE CEILINGS & LIGHTING IN OR #2	60ed
37			& #3, DELIVERY RM #2, LABOR RM #D218, O.R. RECOVERY, 1/2 OF SCU & PREMY / ISOL. NURSERIES.	
38		OMD4	OWNER TO MOVE BACK INTO OR #2 & #3, DELIVERY RM #2, LABOR RM #D218, OR RECOVERY, 1/2 OF	8ed
39			SCU, & PREMY / ISOL. NURSERIES.	
40		OMD5	DISCONTINUE USE OF BIRTHING RM #0221, EXAM RM #D219, & DENTAL OR SUITE / SWING DENTAL O.R. ACTIVITIES	8ed
41			TO MAIN O.R. / SWING O.B. RECOVERY TO GYN 4-BED RM #A243 / SWING FULL TERM NURSERY #A236 TO O.B.	
42			4-BED RM #230	45ed
43	D4		INSTALL ASSOC. DUCTWORK, FILTERS & PIPING FOR AHU#3A / REPLACE CEILINGS & LIGHTING IN	
44			BIRTHING RM #D221, EXAM RM #D219, DENTAL O.R. SUITE, O.B. RECOVERY & FULL TERM NURSERY	
45			#236.	8ed
46		OMD6	OWNER TO MOVE BACK INTO BIRTHING RM #D221, EXAM RM #D219, DENTAL O.R. SUITE, O.B. RECOVERY & FULL	
47			TERM NURSERY #A236 .	
48				
49	E		FINAL DEMOLITION SEQUENCE	45ed
50	E1		DEMOLISH EXISTING AHU #3 FROM ROOF (PATCH & REPAIR ROOF) / DEMOLISH EXISTING MAIN NORMAL	
51			& EMERGENCY SWITCHGEAR FROM SUB-BASEMENT / RELOCATE TEMPORARY TRANSFORMER TO	
52			PERMINENT LOCATION.	
53				
54			PROJECT COMPLETE.	

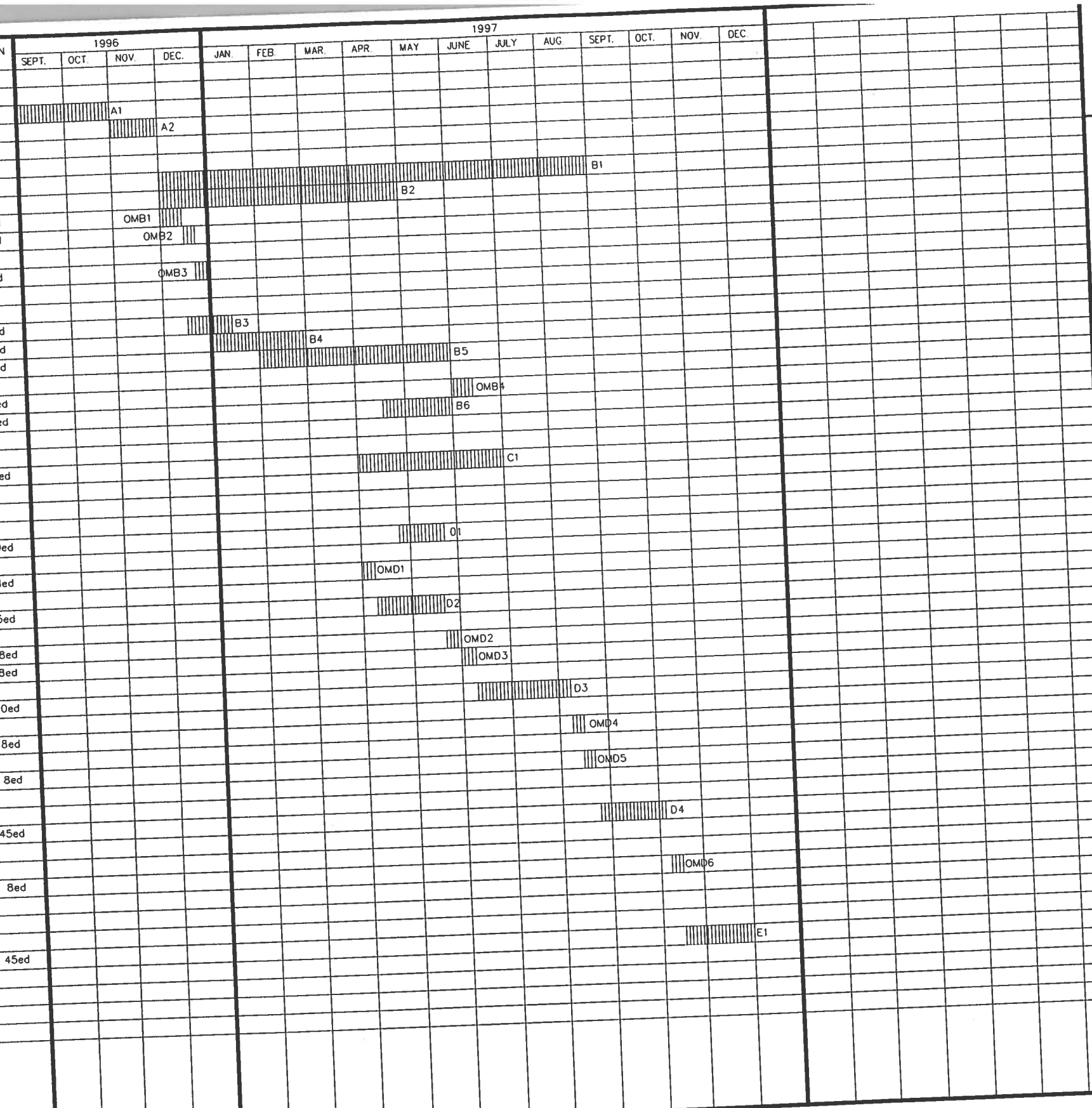

LEGEND :

ed. - ELAPSED CALENDER DAYS
O.M. - OWNER MOVE (BY GOVERNMENT)

NOTE :
PHASING ACTIVITY DURATIONS ARE FOR THE CONTRACTOR'S GUIDANCE AND PLANNING ONLY.

SHERLOCK, SMITH & ADAMS, INC.
ARCHITECTS - ENGINEERS
MONTGOMERY, ALABAMA

U.S. NAVAL STATION ROOSEVELT ROADS, P.R.
REPAIRS TO NAVAL HOSPITAL
PHASING DIAGRAM

CONSTR. CONTR. NO. | SPECIFICATION NO. | NAVFAC DRWG NO. | IF NO | SHEET ? OF ??

PLATE NO. A0-2

PWC #

DEPARTMENT OF THE NAVY
NAVY PUBLIC WORKS CENTER, JACKSONVILLE, FL
NAVAL FACILITIES ENGINEERING COMMAND
U.S. NAVAL STATION ROOSEVELT ROADS, P.R.
REPAIRS TO NAVAL HOSPITAL
PHASING DIAGRAM

DRAWN BY: ???
DESIGN BY: ???
CHK BY: ???
APPROVED:

DATE | REVISION DESCRIPTION

ENG. DIV. DIR.: DATE:
SATISFACTORY TO: DATE:

PWC DWG. NO.

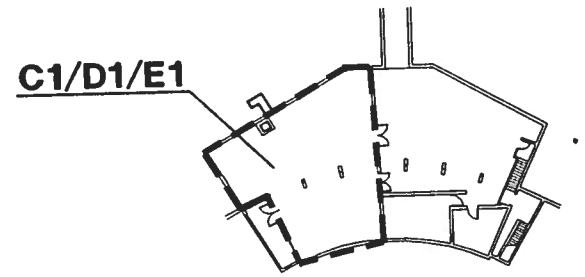

SUB-BASEMENT CONSTRUCTION PHASING

SCALE: 1/32" = 1'-0"

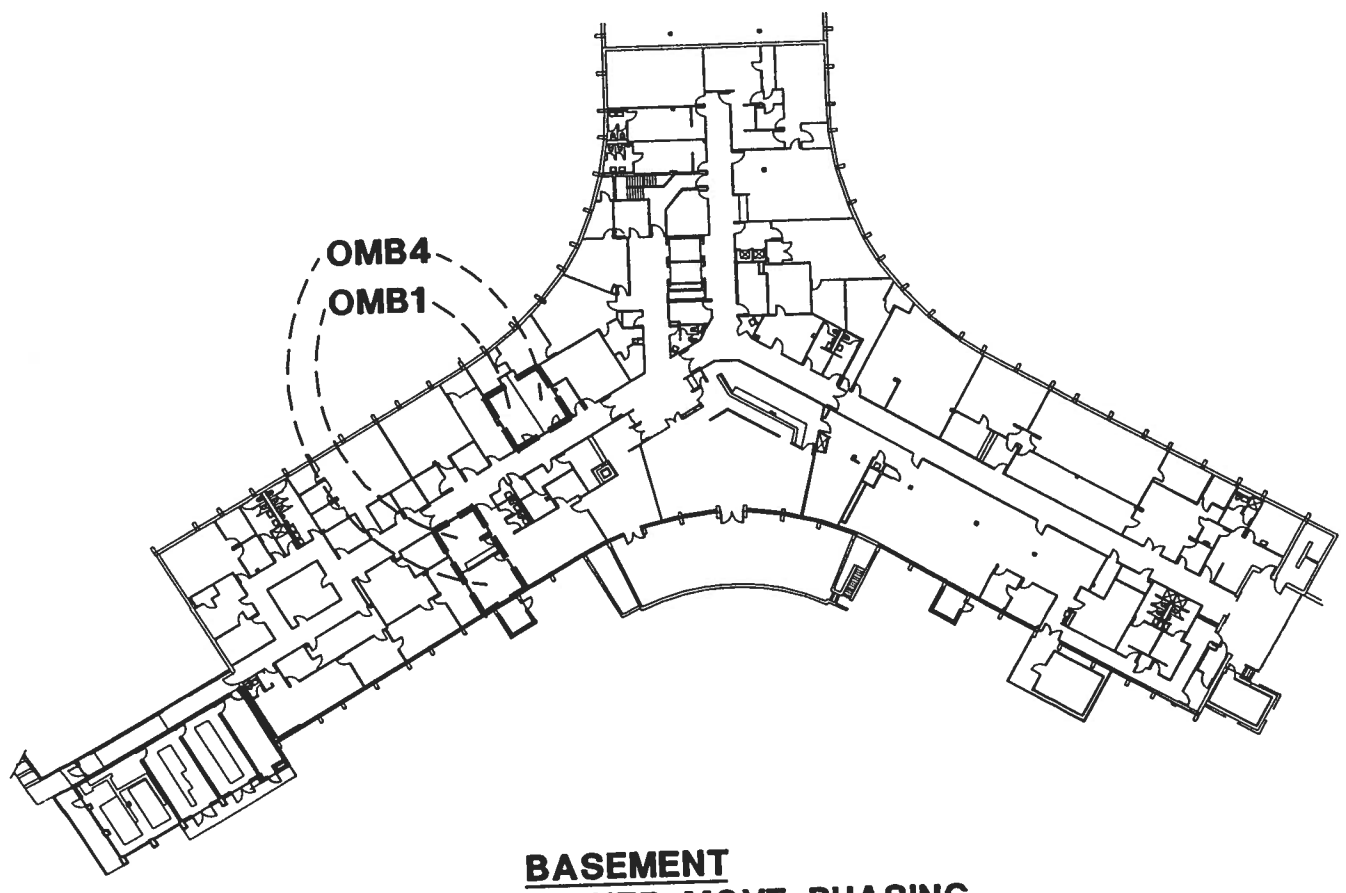

BASEMENT OWNER MOVE PHASING

SCALE: 1/32" = 1'-0"

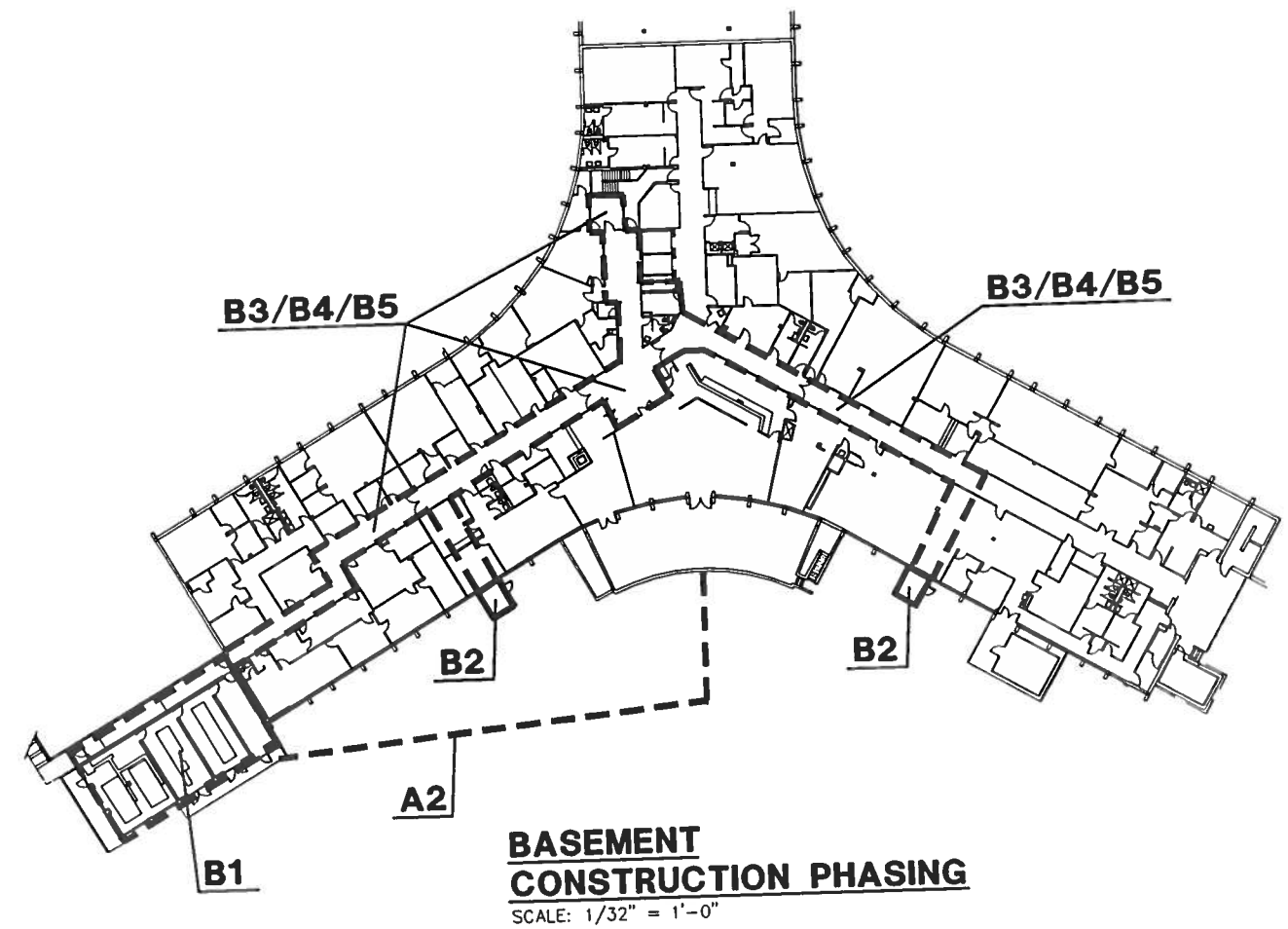

BASEMENT CONSTRUCTION PHASING

SCALE: 1/32" = 1'-0"

SHERLOCK, SMITH & ADAMS, INC.
ARCHITECTS - ENGINEERS
MONTGOMERY, ALABAMA

U.S. NAVAL STATION ROOSEVELT ROADS, P.R.
REPAIRS TO NAVAL HOSPITAL
PHASING PLANS / SUB-BASEMENT & BASEMENT LEVELS

CONSTR. CONTR. NO. | SPECIFICATION NO. | NAVFAC DRWG. NO. | IF NO. | SHEET ? OF ??

DSC. DIV. OR:
DATE
SATISFACTORY TO:
DATE:
DESIGN BY: ???
DRAWN BY: ???
CHK BY: ???
APPROVED

DATE	REVISION DESCRIPTION

NAVAL FACILITIES ENGINEERING COMMAND
DEPARTMENT OF THE NAVY
NAVY PUBLIC WORKS CENTER, JACKSONVILLE, FL
U.S. NAVAL STATION ROOSEVELT ROADS, P.R.
REPAIRS TO NAVAL HOSPITAL
PHASING PLANS / SUB-BASEMENT & BASEMENT LEVELS

PWC DWG. NO. | NAVFAC DWG. NO.

PLATE NO.
AO-3

PWC #