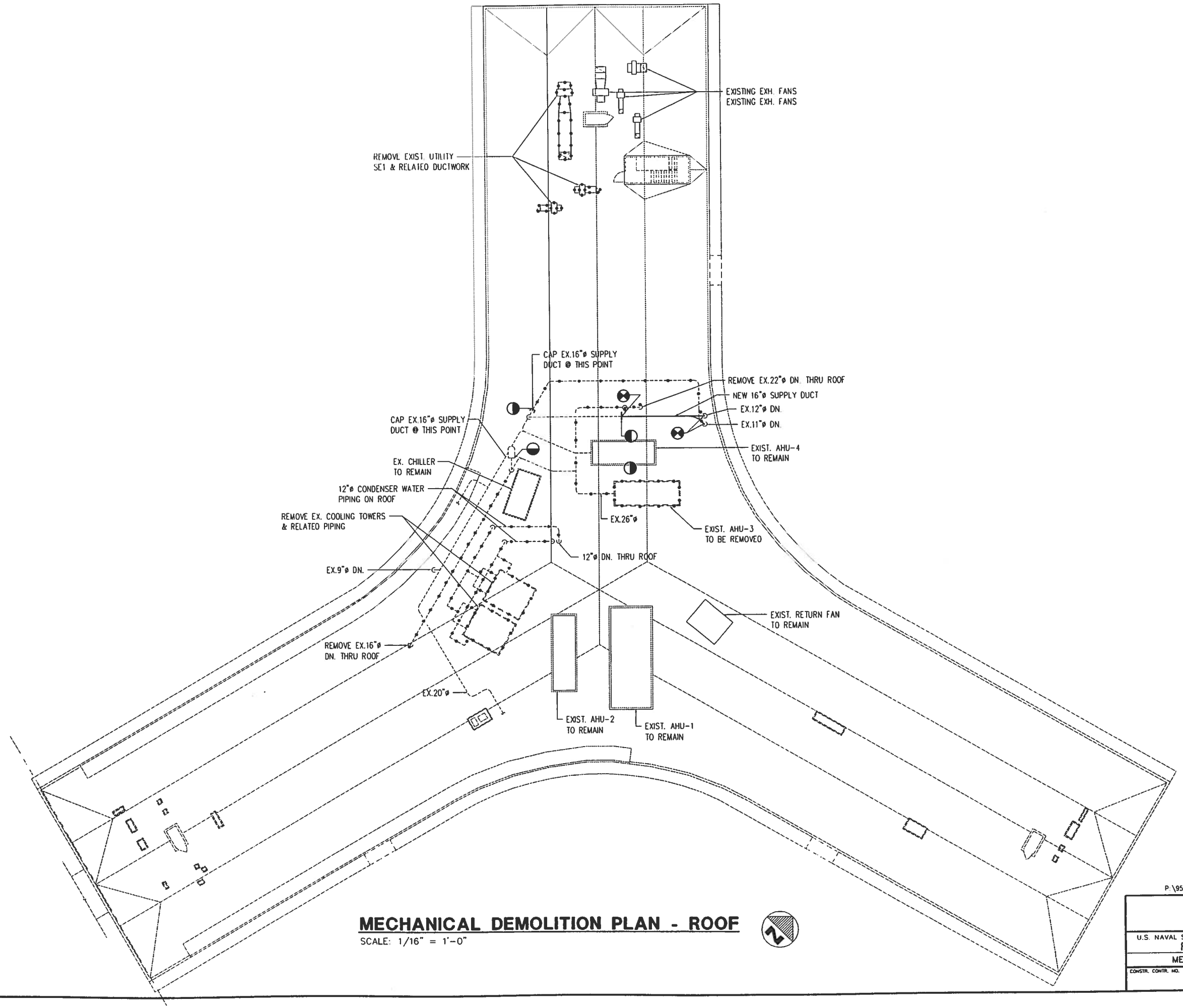

MECHANICAL DEMOLITION PLAN - ROOF

SCALE: 1/16" = 1'-0"

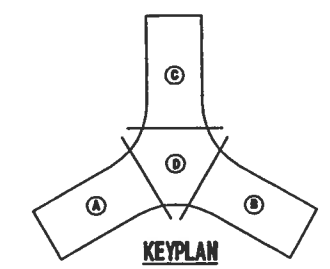

KEYPLAN

0 10 20 30 40

GRAPHIC SCALE

1/16"=1'-0"

P:\95-113\ME\113M0106.dwg, (96|192), 02/27/96 at 09:55:10 by JOINER

SHERLOCK, SMITH & ADAMS, INC.
ARCHITECTS – ENGINEERS
MONTGOMERY, ALABAMA

U.S. NAVAL STATION ROOSEVELT ROADS, P.R.
REPAIRS TO NAVAL HOSPITAL
MECHANICAL DEMOLITION PLAN – ROOF

CONSTR. CONTR. NO. | SPECIFICATION NO. | NAVFAC DRWG. NO. | IF NO | SHEET ? OF ??

SEAL AREA

ENG. DIV. DIR. | DATE | SATISFACTORY TO | DATE

DESIGN BY: DUFFEE DRAWN BY: JOINER
CHK BY: YOUNG APPROVED:

DATE	REVISION DESCRIPTION

NAVAL FACILITIES ENGINEERING COMMAND
DEPARTMENT OF THE NAVY
NAVY PUBLIC WORKS CENTER, JACKSONVILLE, FL
U.S. NAVAL STATION ROOSEVELT ROADS, P.R.
REPAIRS TO NAVAL HOSPITAL
MECHANICAL DEMOLITION PLAN – ROOF

PWC DWG. NO. | NAVFAC DWG. NO. | CONSTR. CONTR. NO.

PLATE NO.

M1-5

PWC #

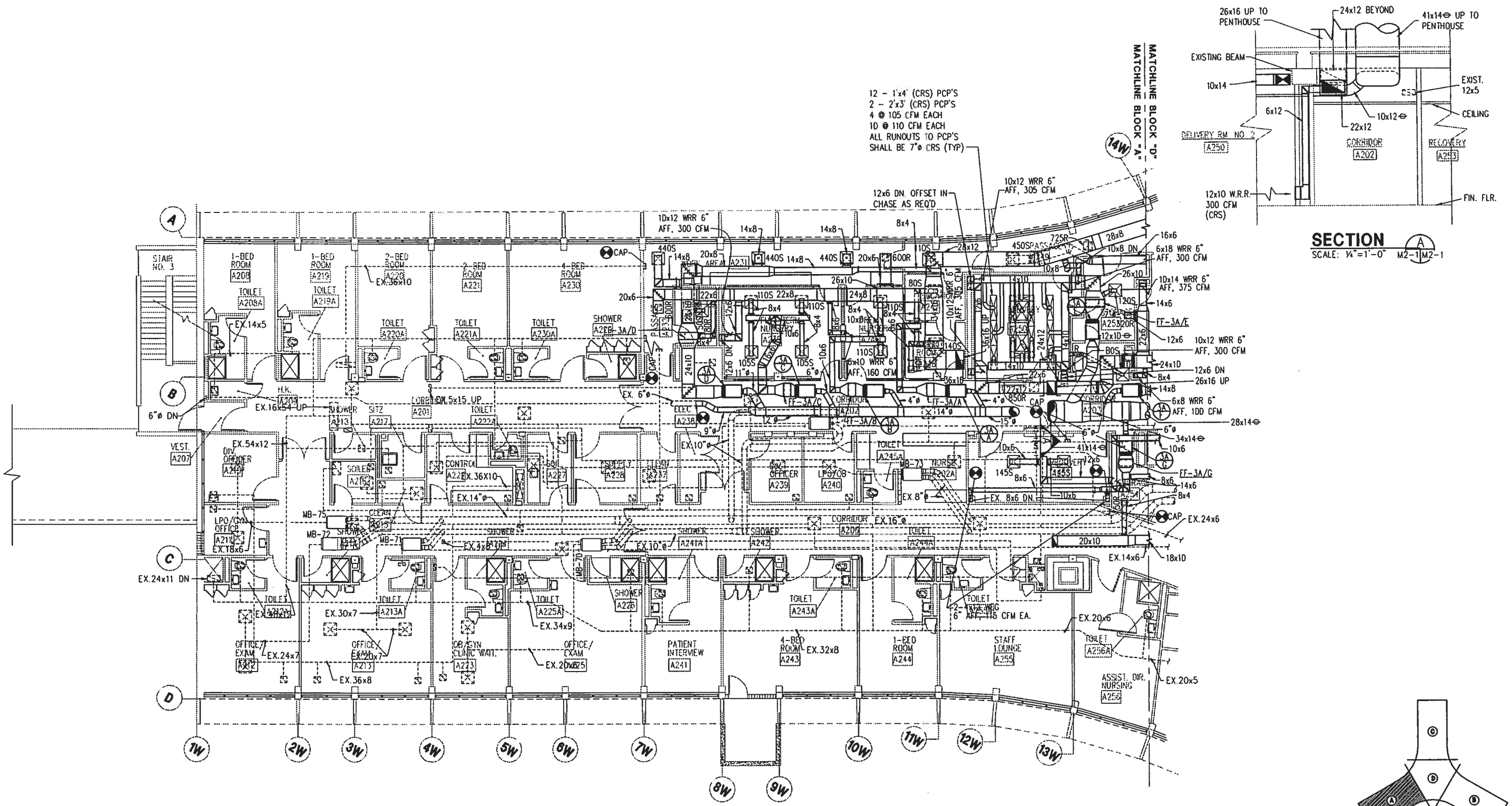

NOTES:

1. ALL DUCTWORK & ACCESSORIES DOWNSTREAM OF FINAL FILTERS (FF-) SHALL BE CRS TYPE.
2. ALL FINAL FILTERS (FF-) MOUNTED ABOVE THE CEILINGS SHALL HAVE BOTTOM ACCESS DOORS. COORDINATE WITH OTHER DISCIPLINES TO AVOID CONFLICT. FILTER ACCESS MUST BE MAINTAINED.
3. ALL WALL RETURN REGISTERS OR GRILLES IN O.R.'S, DELIVERY ROOMS AND DENTAL O.R.'S SHALL BE CONSTRUCTED OF CORROSIVE RESISTANT STEEL (CRS).

MECHANICAL DUCTWORK PLAN-2nd FLOOR BLOCK "A"

SCALE: 1/8" = 1'-0"

SHERLOCK, SMITH & ADAMS, INC.
ARCHITECTS – ENGINEERS
MONTGOMERY, ALABAMA

U.S. NAVAL STATION ROOSEVELT ROADS, P.R.
REPAIRS TO NAVAL HOSPITAL
MECHANICAL DUCTWORK PLAN – 2nd FLOOR BLOCK "A"

CONSTR. CONTR. NO. | SPECIFICATION NO. | NAVFAC DRWG. NO. | TF NO. | SHEET ? OF ??

SEAL AREA

DESIGN BY: DUFFEE DRAWN BY: JOINER
CHK BY: YOUNG APPROVED:
CHK. DW. DR. DATE SATISFACTORY TO DATE

REVISION DESCRIPTION | DATE

DEPARTMENT OF THE NAVY
NAVAL FACILITIES ENGINEERING COMMAND
NAVY PUBLIC WORKS CENTER, JACKSONVILLE, FL
U.S. NAVAL STATION ROOSEVELT ROADS, P.R.
REPAIRS TO NAVAL HOSPITAL
MECHANICAL DUCTWORK PLAN – 2nd FLOOR BLOCK "A"

CONSTR. CONTR. NO. | NAVFAC DRWG. NO. | PWC DWG. NO.

PLATE NO.
M2-1

PWC #

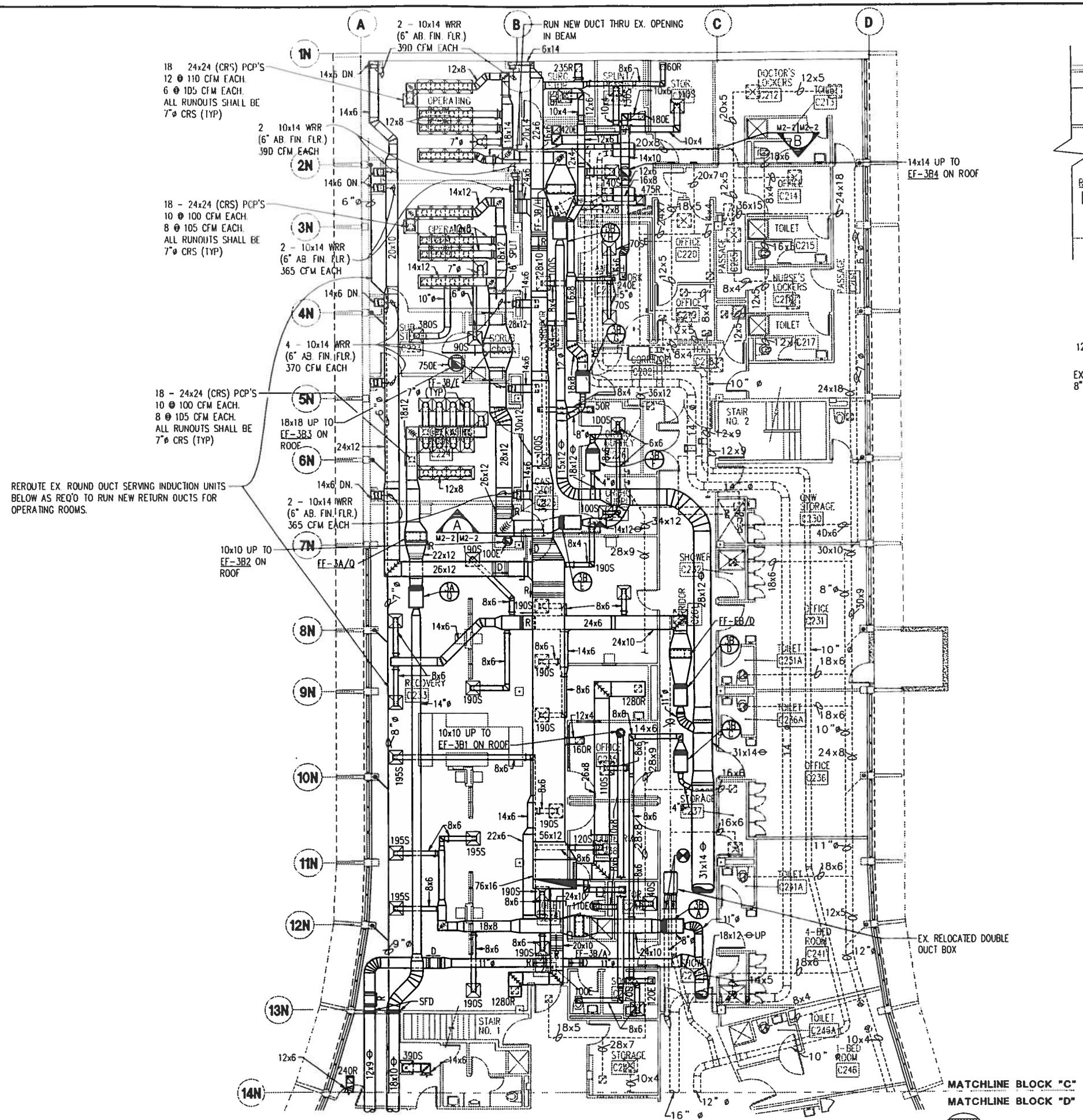

MECHANICAL DUCTWORK PLAN - 2nd FLOOR BLOCK "C"

SCALE: 1/8" = 1'-0"

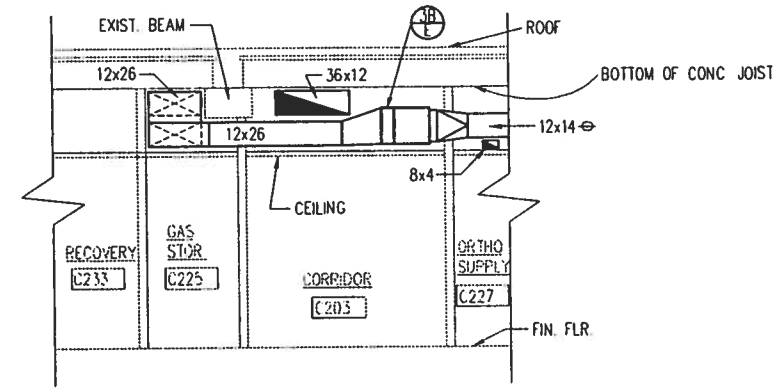

SECTION A

SCALE: 1/4"=1'-0" M2-2 M2-2

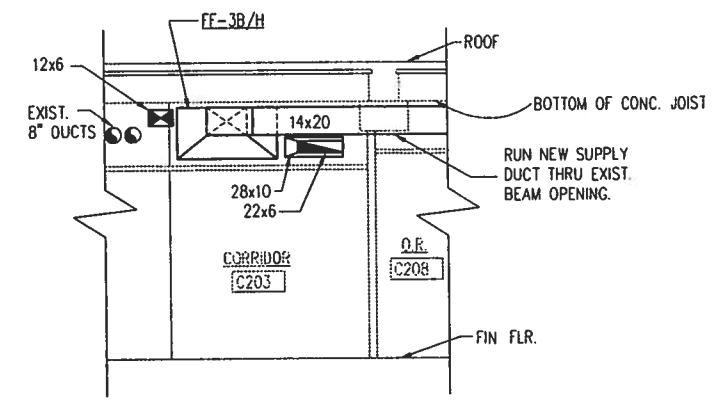

SECTION B

SCALE: 1/4"=1'-0" M2-2 M2-2

NOTES:

1. ALL DUCTWORK & ACCESSORIES DOWNSTREAM OF FINAL FILTERS (FF-) SHALL BE CRS TYPE.
2. ALL FINAL FILTERS (FF-) MOUNTED ABOVE THE CEILINGS SHALL HAVE BOTTOM ACCESS DOORS. COORDINATE WITH OTHER DISCIPLINES TO AVOID CONFLICT. FILTER ACCESS MUST BE MAINTAINED.
3. ALL WALL RETURN REGISTERS OR GRILLES IN O.R.'S, DELIVERY ROOMS AND DENTAL O.R.'S SHALL BE CONSTRUCTED OF CORROSIVE RESISTANT STEEL (CRS).

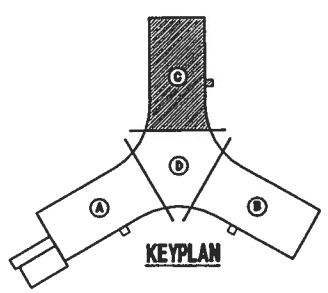

GRAPHIC SCALE 1/8"=1'-0"

0 5 10 15 20

P:\95-113\ME\113M0202.dwg, (48|96), 02/27/96 at 09:59:57 by JOINER_J

SHERLOCK, SMITH & ADAMS, INC.
ARCHITECTS – ENGINEERS
MONTGOMERY, ALABAMA

U.S. NAVAL STATION ROOSEVELT ROADS, P.R.
REPAIRS TO NAVAL HOSPITAL
MECHANICAL DUCTWORK PLAN – 2nd FLOOR BLOCK "C"

CONSTR. CONTR. NO. | SPECIFICATION NO. | NAVFAC DRWG. NO. | TF NO. | SHEET ? OF ??

PLATE NO. **M2-2**

SEAL AREA

DATE	REVISION DESCRIPTION	EXC. DV. DR	DATE	SATISFACTORY TO	DATE

DESIGN BY: DUFFEE DRAWN BY: JOINER
CHK BY: YOUNG APPROVED:

NAVAL FACILITIES ENGINEERING COMMAND
DEPARTMENT OF THE NAVY
NAVY PUBLIC WORKS CENTER, JACKSONVILLE, FL
U.S. NAVAL STATION ROOSEVELT ROADS, P.R.
REPAIRS TO NAVAL HOSPITAL
MECHANICAL DUCTWORK PLAN – 2nd FLOOR BLOCK "C"

PWC DWG. NO. | NAVFAC DWG. NO. | CONSTR. CONTR. NO.

PWC #

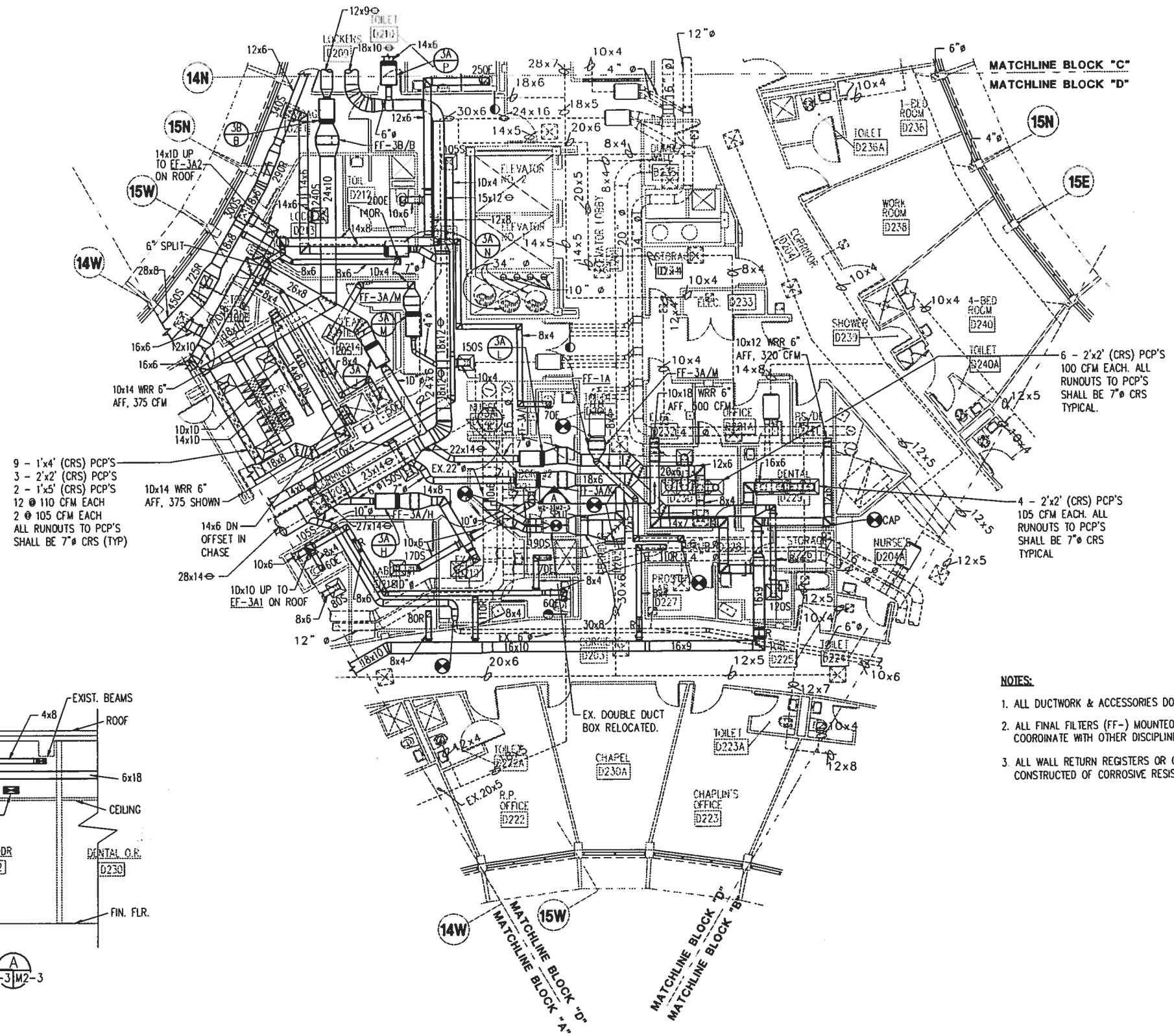

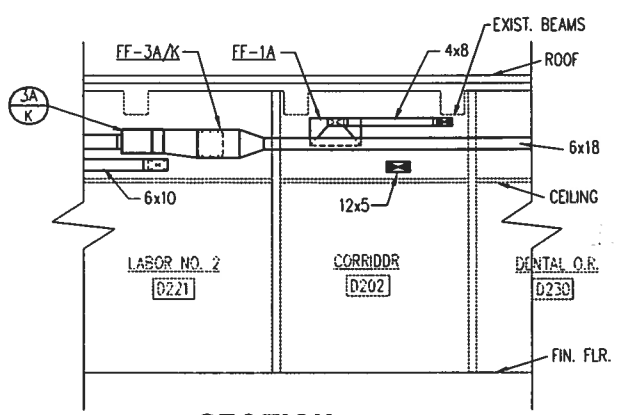

SECTION A

SCALE: 1/4"=1'-0" M2-3 | M2-3

NOTES:

1. ALL DUCTWORK & ACCESSORIES DOWNSTREAM OF FINAL FILTERS (FF-) SHALL BE CRS TYPE.
2. ALL FINAL FILTERS (FF-) MOUNTED ABOVE THE CEILINGS SHALL HAVE BOTTOM ACCESS DOORS. COORDINATE WITH OTHER DISCIPLINES TO AVOID CONFLICT. FILTER ACCESS MUST BE MAINTAINED.
3. ALL WALL RETURN REGISTERS OR GRILLES IN O.R.'S, DELIVERY ROOMS AND DENTAL O.R.'S SHALL BE CONSTRUCTED OF CORROSIVE RESISTANT STEEL (CRS).

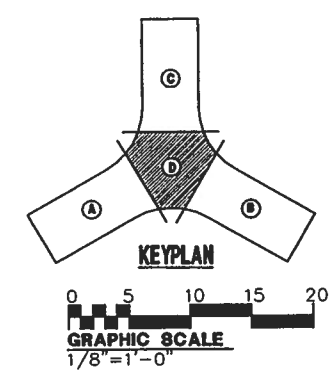

MECHANICAL DUCTWORK PLAN - 2nd FLOOR BLOCK "D"

SCALE: 1/8" = 1'-0"

P:\95-113\ME\113M0203.dwg, (4|8|96), 02/27/96 at 10:02:07 by JOINER_J

SHERLOCK, SMITH & ADAMS, INC.
ARCHITECTS - ENGINEERS
MONTGOMERY, ALABAMA

U.S. NAVAL STATION ROOSEVELT ROADS, P.R
REPAIRS TO NAVAL HOSPITAL
MECHANICAL DUCTWORK PLAN - 2nd FLOOR BLOCK "D"

CONSTR. CONTR. NO. | SPECIFICATION NO. | NAVFAC DRWG. NO. | TF NO. | SHEET ? OF ??

SEAL AREA

ENG. OV. DR.: DATE:
SATISFACTORY TO: DATE:
DESIGN BY DUFFEE DRAWN BY JOINER
CHK BY YOUNG APPROVED:

REVISION DESCRIPTION | DATE

NAVAL FACILITIES ENGINEERING COMMAND
DEPARTMENT OF THE NAVY
NAVY PUBLIC WORKS CENTER, JACKSONVILLE, FL
U.S. NAVAL STATION ROOSEVELT ROADS, P.R.
REPAIRS TO NAVAL HOSPITAL
MECHANICAL DUCTWORK PLAN - 2nd FLOOR BLOCK "D"

PWC DWG. NO. | NAVFAC DWG. NO. | CONSTR. CONTR. NO.

PLATE NO.
M2-3

PWC #

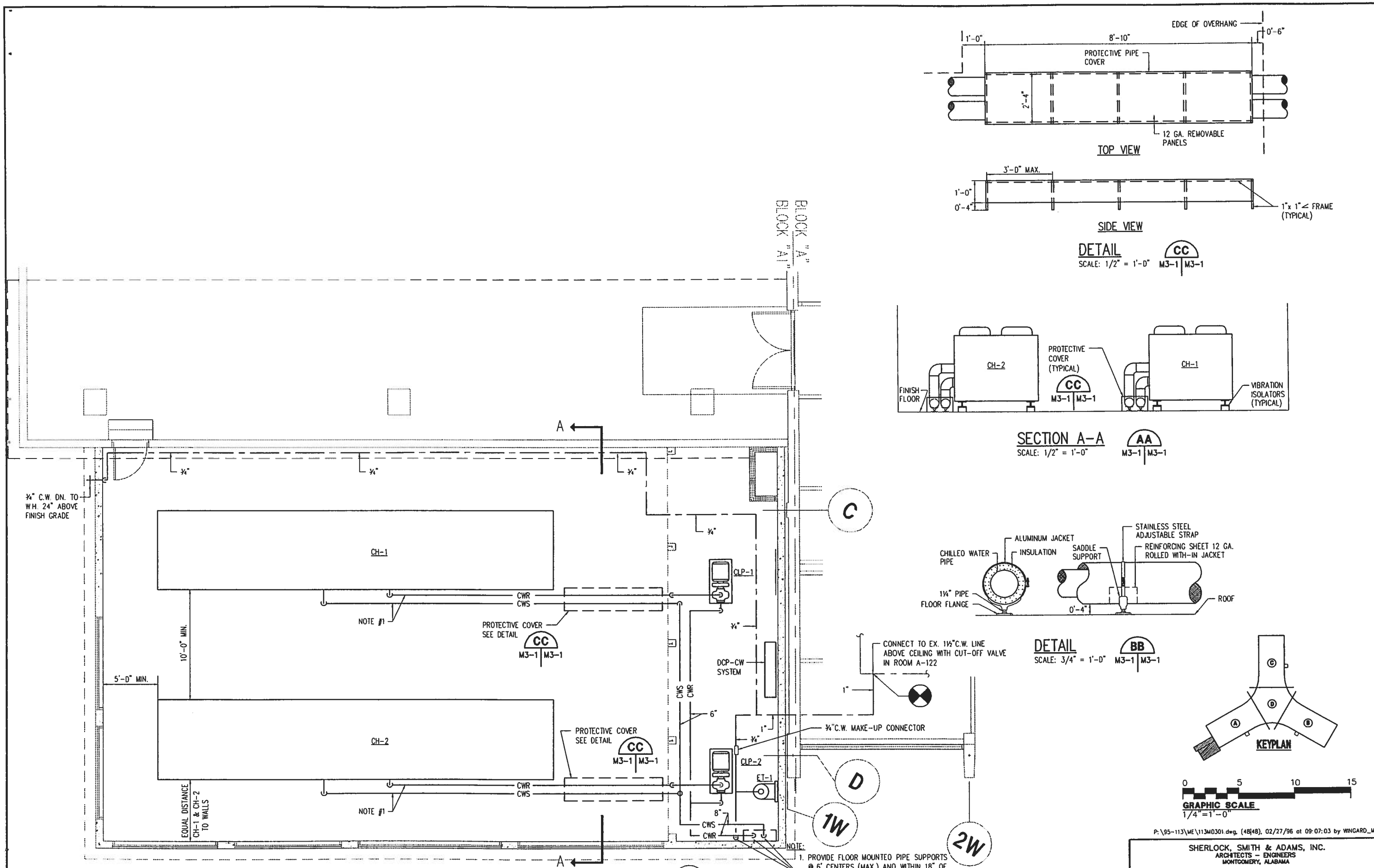
BLOCK "A"
BLOCK "A1"
A
¾"
¾" C.W. DN. TO W.H. 24" ABOVE FINISH GRADE
CH-1
CH-2
CWR
CWS
NOTE #1
PROTECTIVE COVER SEE DETAIL
CC
M3-1 M3-1
10'-0" MIN.
5'-0" MIN.
EQUAL DISTANCE CH-1 & CH-2 TO WALLS
CLP-1
CLP-2
DCP-CW SYSTEM
6"
8"
ET-1
C
D
1W
2W
CONNECT TO EX. 1½"C.W. LINE ABOVE CEILING WITH CUT-OFF VALVE IN ROOM A-122
1"
¾"C.W. MAKE-UP CONNECTOR
SEE SHEET M6-1 & SITE PLAN FOR CONTINUATION
NOTE:
1. PROVIDE FLOOR MOUNTED PIPE SUPPORTS @ 6' CENTERS (MAX.) AND WITHIN 18" OF CHANGE IN DIRECTIONS TO SUPPORT CWS & CWR PIPING AT ROOF LEVEL. SEE PIPE SUPPORT DETAIL
BB
M3-1 M3-1
MECHANICAL PIPING PLAN - UTILITY BUILDING
SCALE: 1/4" = 1'-0"
EDGE OF OVERHANG
0'-6"
1'-0"
8'-10"
PROTECTIVE PIPE COVER
2'-4"
12 GA. REMOVABLE PANELS
TOP VIEW
3'-0" MAX.
1'-0"
0'-4"
1"x 1" ∠ FRAME (TYPICAL)
SIDE VIEW
DETAIL
SCALE: 1/2" = 1'-0"
FINISH FLOOR
PROTECTIVE COVER (TYPICAL)
VIBRATION ISOLATORS (TYPICAL)
SECTION A-A
SCALE: 1/2" = 1'-0"
AA
CHILLED WATER PIPE
ALUMINUM JACKET
INSULATION
SADDLE SUPPORT
STAINLESS STEEL ADJUSTABLE STRAP
REINFORCING SHEET 12 GA. ROLLED WITH-IN JACKET
1¼" PIPE
FLOOR FLANGE
0'-4"
ROOF
DETAIL
SCALE: 3/4" = 1'-0"
KEYPLAN
GRAPHIC SCALE
1/4"=1'-0"
0 5 10 15
P:\95-113\ME\113M0301.dwg, (48|48), 02/27/96 at 09:07:03 by WINGARD_M
SHERLOCK, SMITH & ADAMS, INC.
ARCHITECTS - ENGINEERS
MONTGOMERY, ALABAMA
U.S. NAVAL STATION ROOSEVELT ROADS, P.R.
REPAIRS TO NAVAL HOSPITAL
MECHANICAL PIPING PLAN - UTILITY BUILDING
CONSTR CONTR. NO
SPECIFICATION NO.
NAVFAC DRWG. NO.
TF NO
SHEET ? OF ??
SEAL AREA
DRAWN BY ???
DESIGN BY ???
CHK. BY ???
APPROVED:
DATE:
SATISFACTORY TO:
REVISION DESCRIPTION
NAVAL FACILITIES ENGINEERING COMMAND
DEPARTMENT OF THE NAVY
NAVY PUBLIC WORKS CENTER, JACKSONVILLE, FL
U.S. NAVAL STATION ROOSEVELT ROADS, P.R.
REPAIRS TO NAVAL HOSPITAL
MECHANICAL PIPING PLAN - UTILITY BUILDING
PWC DWG. NO.
NAVFAC DWG. NO.
CONSTR CONTR. NO.
PLATE NO.
M3-1
PWC #

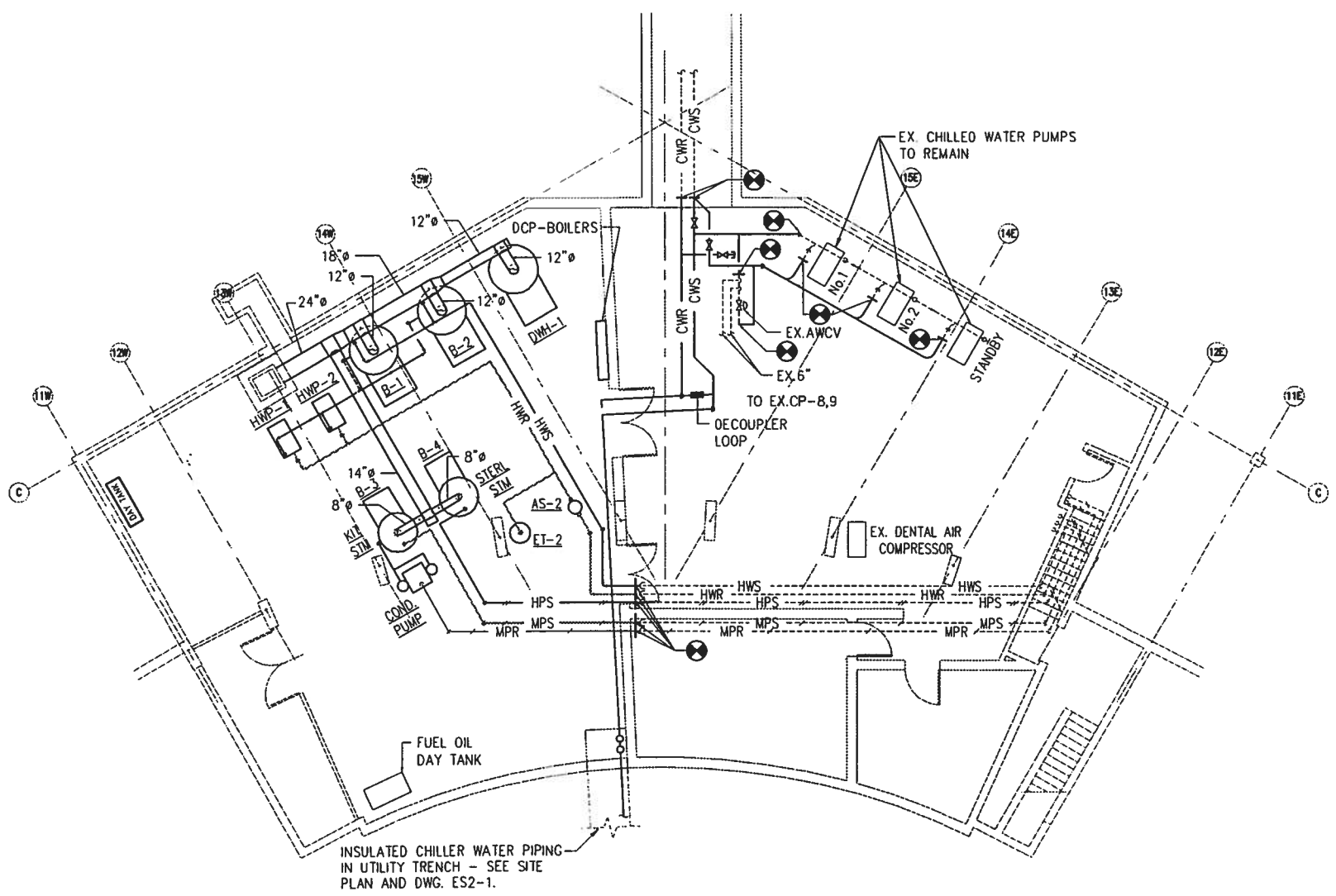

MECHANICAL PIPING PLAN - SUB-BASEMENT

SCALE: 1/8" = 1'-0"

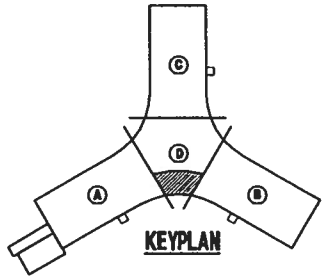

KEYPLAN

0 5 10 15 20

GRAPHIC SCALE
1/8"=1'-0"

P:\95-113\ME\113M0302.dwg, (4/8/96), 02/28/96 at 11:33:47 by WINGARD_M

SHERLOCK, SMITH & ADAMS, INC.
ARCHITECTS - ENGINEERS
MONTGOMERY, ALABAMA

U.S. NAVAL STATION ROOSEVELT ROADS, P.R.
REPAIRS TO NAVAL HOSPITAL
MECHANICAL PIPING PLAN - SUB-BASEMENT

CONSTR. CONTR. NO. | SPECIFICATION NO | NAVFAC DRWG. NO. | TF NO | SHEET ? OF ??

SEAL AREA

DWG. DIV. DIR. ____ DATE: ____
SATISFACTORY TO: ____ DATE: ____
DESIGN BY: MCDONALD DRAWN BY: ROWER
CHK BY: YOUNG APPROVED:

DATE	REVISION DESCRIPTION

DEPARTMENT OF THE NAVY
NAVAL FACILITIES ENGINEERING COMMAND
NAVY PUBLIC WORKS CENTER, JACKSONVILLE, FL
U.S. NAVAL STATION ROOSEVELT ROADS, P.R.
REPAIRS TO NAVAL HOSPITAL
MECHANICAL PIPING PLAN - SUB-BASEMENT

CONSTR. CONTR. NO. | NAVFAC DWG. NO | PWC DWG. NO.

PLATE NO
M3-2

PWC #

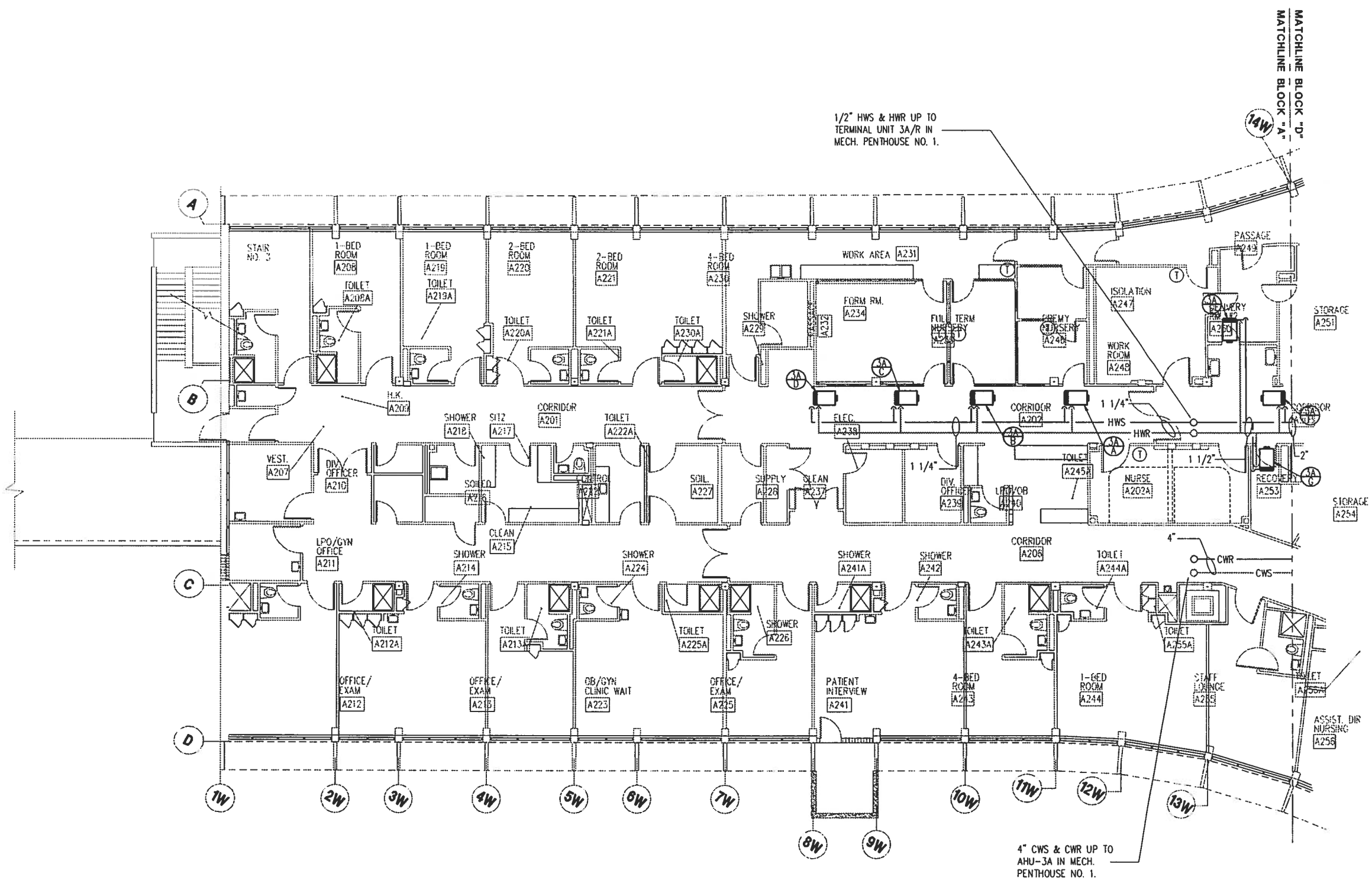

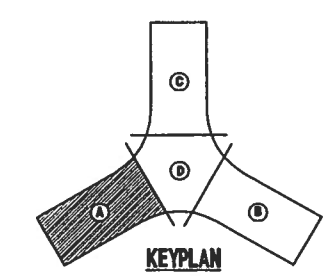

MECHANICAL PIPING PLAN - 2nd FLOOR BLOCK "A"

SCALE: 1/8" = 1'-0"

P:\95-113\ME\113M0303.dwg, (48|96), 02/29/96 at 20:25:18 by DUFFEE_R

SHERLOCK, SMITH & ADAMS, INC.
ARCHITECTS – ENGINEERS
MONTGOMERY, ALABAMA

U.S. NAVAL STATION ROOSEVELT ROADS, P.R.
REPAIRS TO NAVAL HOSPITAL
MECHANICAL PIPING PLAN – 2nd FLOOR BLOCK "A"

CONSTR. CONTR. NO. | SPECIFICATION NO. | NAVFAC DRWG. NO. | TF NO. | SHEET ? OF ??

SEAL AREA

DVE. DIV. DIR. | DATE | SATISFACTORY TO | DATE

DESIGN BY: DUFFEE DRAWN BY: JOINER
CHK BY: YOUNG APPROVED:

DATE	REVISION DESCRIPTION

NAVAL FACILITIES ENGINEERING COMMAND
DEPARTMENT OF THE NAVY
NAVY PUBLIC WORKS CENTER, JACKSONVILLE, FL
U.S. NAVAL STATION ROOSEVELT ROADS, P.R.
REPAIRS TO NAVAL HOSPITAL
MECHANICAL PIPING PLAN – 2nd FLOOR BLOCK "A"

PWC DWG. NO. | NAVFAC DWG. NO. | CONSTR. CONTR. NO.

PLATE NO.
M3-3

PWC #

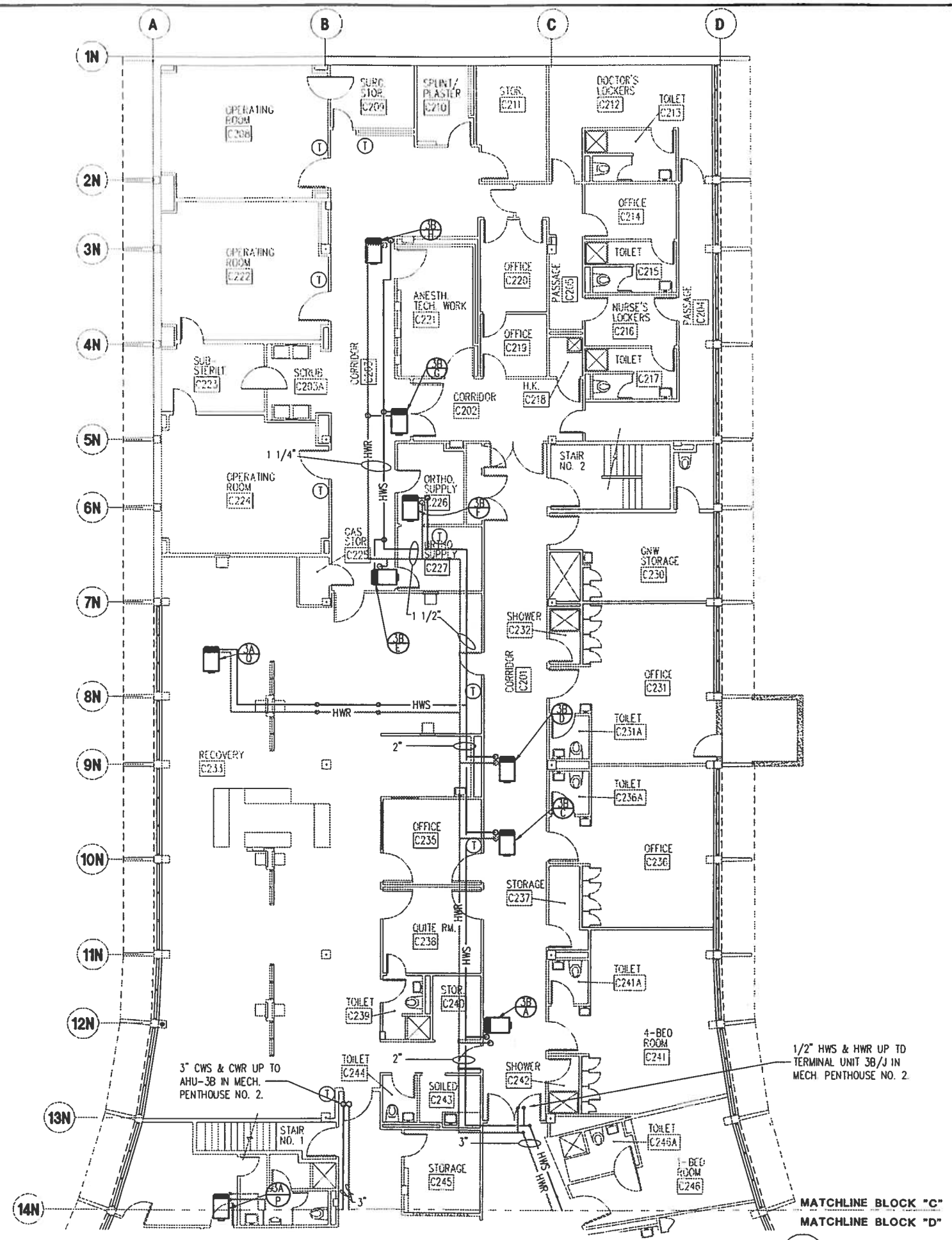

MECHANICAL PIPING PLAN - 2nd FLOOR BLOCK "C"

SCALE: 1/8" = 1'-0"

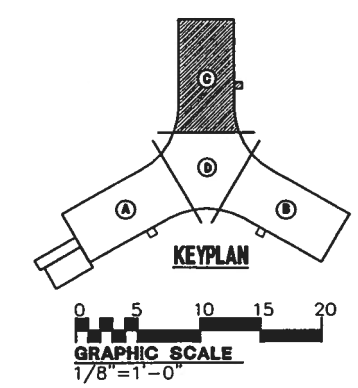

P:\95-113\ME\113M0304.dwg, (48|96), 02/29/96 at 11:56:52 by JOINER_J

SHERLOCK, SMITH & ADAMS, INC.
ARCHITECTS – ENGINEERS
MONTGOMERY, ALABAMA

U.S. NAVAL STATION ROOSEVELT ROADS, P.R.
REPAIRS TO NAVAL HOSPITAL
MECHANICAL PIPING PLAN – 2nd FLOOR BLOCK "C"

CONSTR. CONTR. NO. | SPECIFICATION NO. | NAVFAC DRWG. NO. | TF NO. | SHEET ? OF ??

SEAL AREA

DAC. DV. DR.: DATE: SATISFACTORY TO: DATE:

DESIGN BY: DUFFEE DRAWN BY: JOINER
CHK. BY: YOUNG APPROVED:

DATE	REVISION DESCRIPTION

DEPARTMENT OF THE NAVY
NAVAL FACILITIES ENGINEERING COMMAND
NAVY PUBLIC WORKS CENTER, JACKSONVILLE, FL
U.S. NAVAL STATION ROOSEVELT ROADS, P.R.
REPAIRS TO NAVAL HOSPITAL
MECHANICAL PIPING PLAN – 2nd FLOOR BLOCK "C"

PWC DRG. NO. | NAVFAC DRWG. NO. | CONSTR. CONTR. NO.

PLATE NO.
M3-4

PWC #

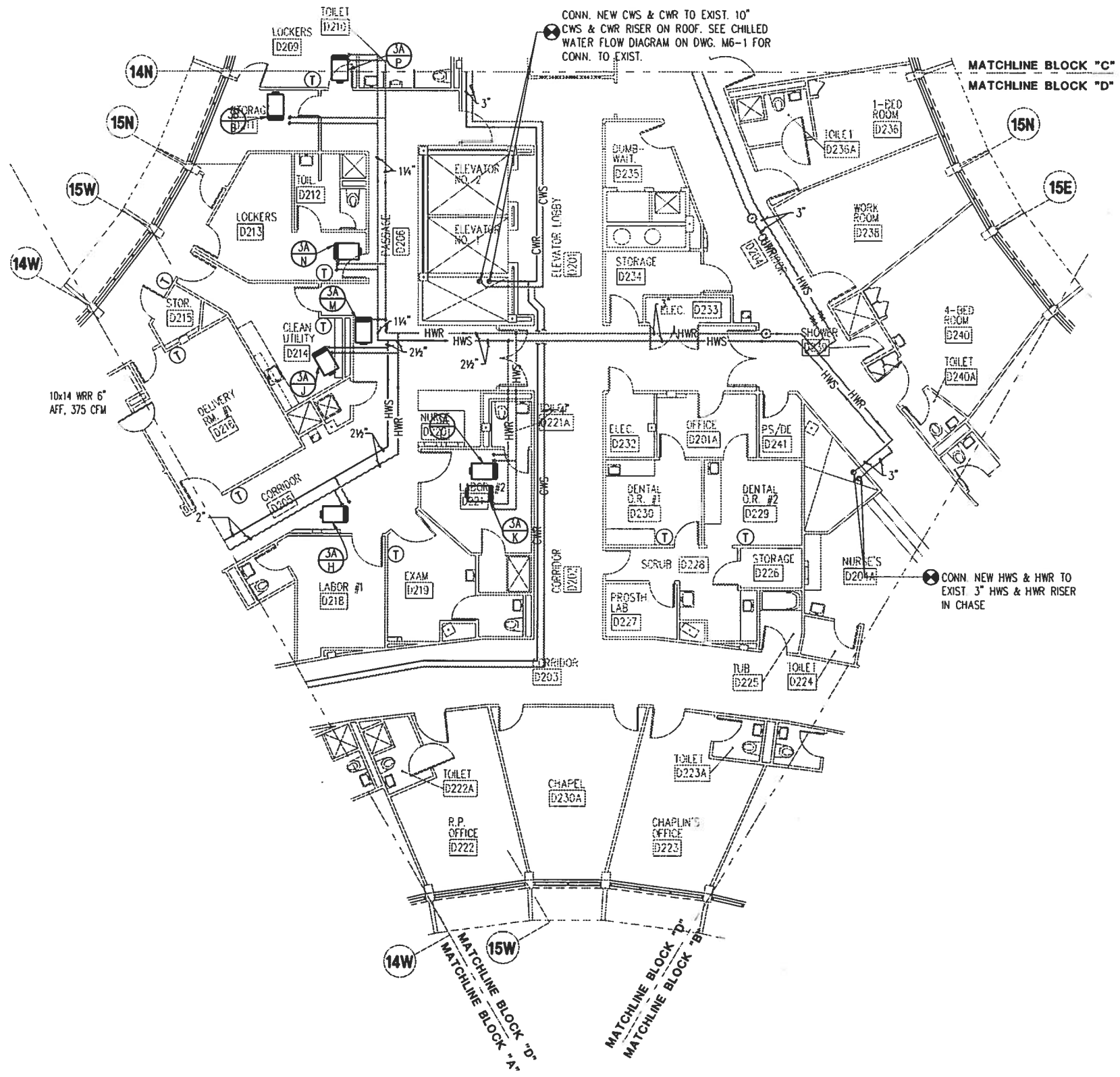

MECHANICAL PIPING PLAN - 2nd FLOOR BLOCK "D"

SCALE: 1/8" = 1'-0"

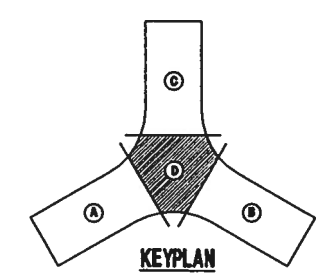

KEYPLAN

P:\95-113\ME\113M0305.dwg, (48|96), 02/29/96 at 20:23:45 by DUFFEE_R

SHERLOCK, SMITH & ADAMS, INC.
ARCHITECTS - ENGINEERS
MONTGOMERY, ALABAMA

U.S. NAVAL STATION ROOSEVELT ROADS, P.R.
REPAIRS TO NAVAL HOSPITAL
MECHANICAL PIPING PLAN - 2nd FLOOR BLOCK "D"

CONSTR. CONTR. NO. | SPECIFICATION NO. | NAVFAC DRWG. NO. | TF NO. | SHEET ? OF ??

SEAL AREA

DESIGN BY: DUFFEE DRAWN BY: JOINER

DWG. ON DIR.: DATE: SATISFACTORY TO: DATE:

REVISION DESCRIPTION | DATE

DEPARTMENT OF THE NAVY
NAVAL FACILITIES ENGINEERING COMMAND
NAVY PUBLIC WORKS CENTER, JACKSONVILLE, FL
U.S. NAVAL STATION ROOSEVELT ROADS, P.R.
REPAIRS TO NAVAL HOSPITAL
MECHANICAL PIPING PLAN - 2nd FLOOR BLOCK "D"

PLATE NO. M3-5

PWC #

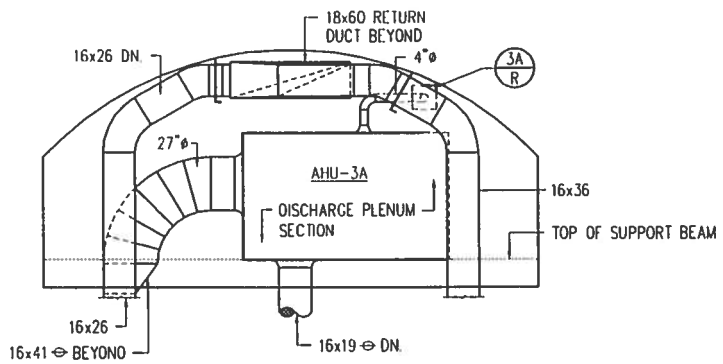

SECTION
SCALE: 1/4" = 1'-0"

A
M4-1 | M4-1

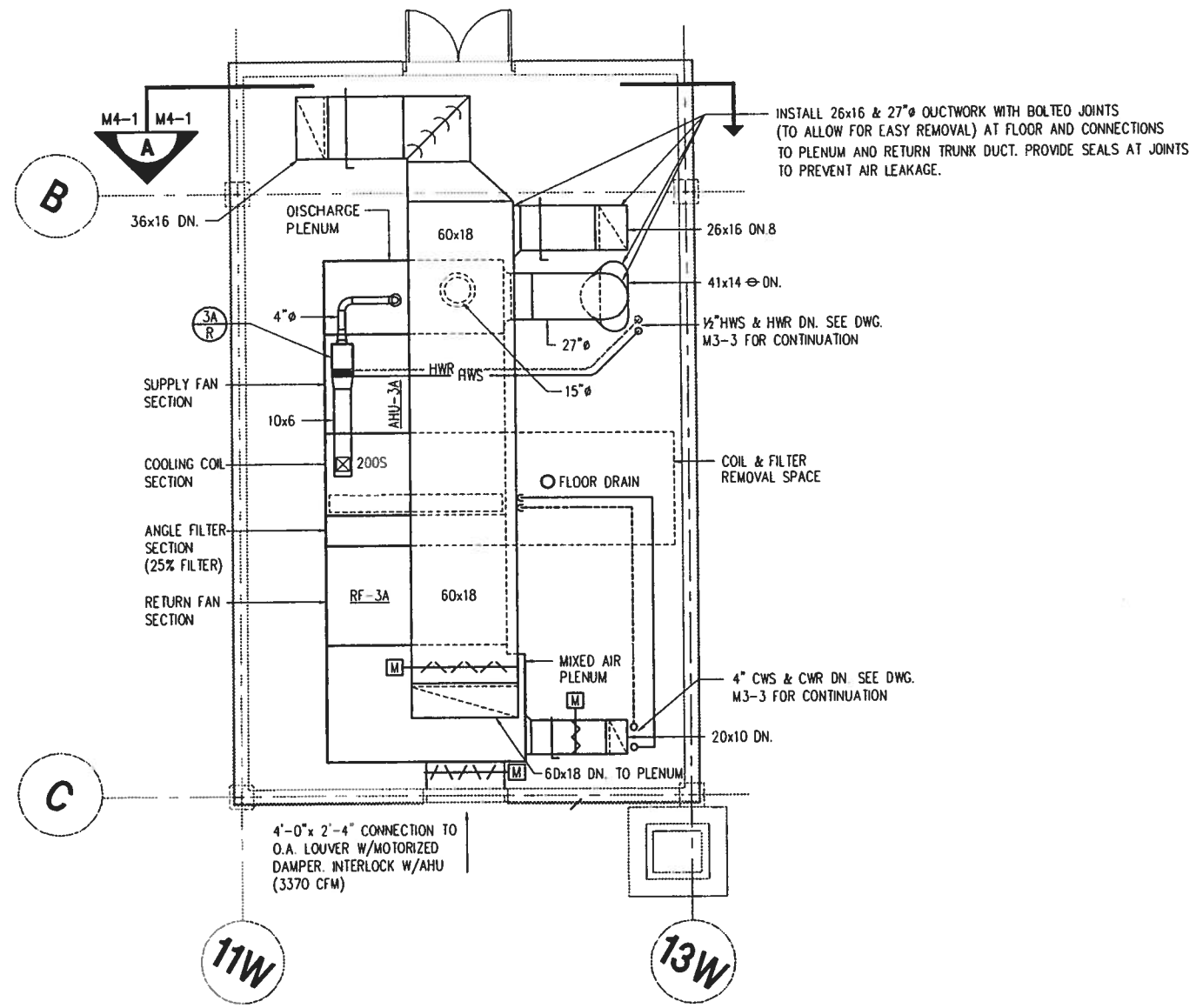

ENLARGED FLOOR PLAN - MECH PENTHOUSE NO.1 BLOCK "A"
SCALE: 1/4" = 1'-0"

0 5 10 15
GRAPHIC SCALE
1/4"=1'-0"

P:\95-113\ME\113M0401.dwg, (48|48), 02/28/96 at 09:05:00 by WINGARD, M

SHERLOCK, SMITH & ADAMS, INC.
ARCHITECTS - ENGINEERS
MONTGOMERY, ALABAMA

U.S. NAVAL STATION ROOSEVELT ROADS, P.R.
REPAIRS TO NAVAL HOSPITAL
ENLARGED FLOOR PLAN - MECH PENTHOUSE NO.1 BLOCK "A"
CONSTR. CONTR. NO. | SPECIFICATION NO. | NAVFAC DRWG. NO. | TF NO. | SHEET ? OF ??

SEAL AREA

DWG. DN. DR. | DATE | SATISFACTORY TO | DATE | DESIGN BY ??? | DRAWN BY ??? | CHK. BY ??? | APPROVED:

DATE | REVISION DESCRIPTION

DEPARTMENT OF THE NAVY
NAVAL FACILITIES ENGINEERING COMMAND
NAVY PUBLIC WORKS CENTER, JACKSONVILLE, FL
U.S. NAVAL STATION ROOSEVELT ROADS, P.R.
REPAIRS TO NAVAL HOSPITAL
ENLARGED FLOOR PLAN - MECH PENTHOUSE NO.1 BLOCK "A"
CONSTR. CONTR. NO. | NAVFAC DWG. NO. | PWC DWG. NO.

PLATE NO
M4-1

PWC #

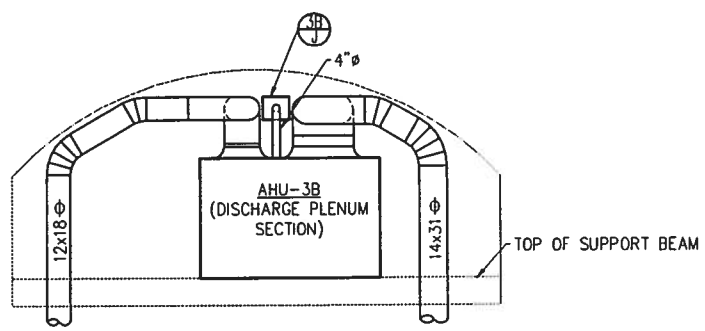

SECTION B
SCALE: 1/4"=1'-0" M4-2 M4-2

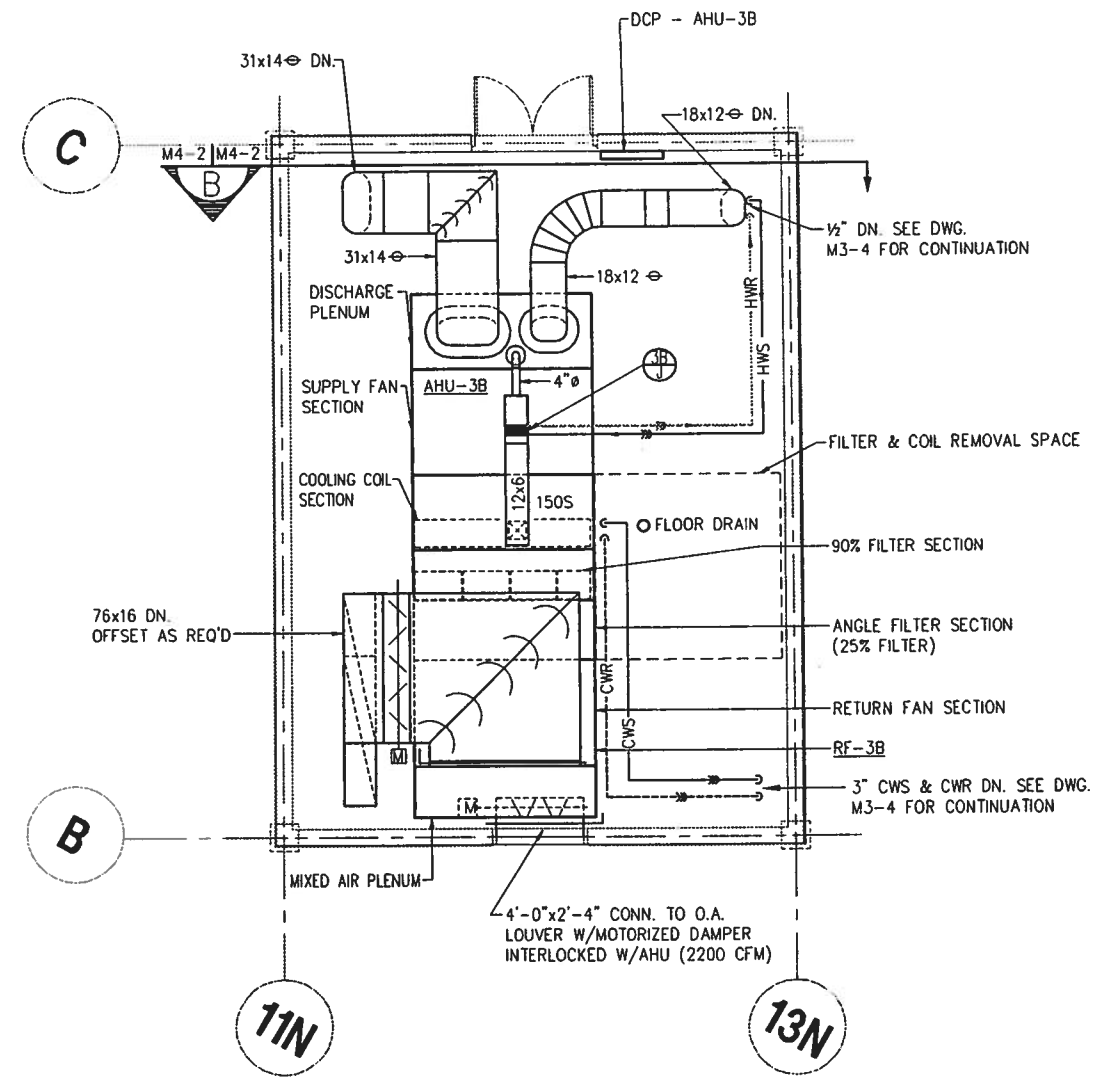

ENLARGED FLOOR PLAN - MECH PENTHOUSE NO.2 BLOCK "C"
SCALE: 1/4"=1'-0"

N

0 5 10 15
GRAPHIC SCALE
1/4"=1'-0"

P:\95-113\ME\113M0402.dwg, (24|48), 02/29/96 at 09:49:49 by JOINER_J

SHERLOCK, SMITH & ADAMS, INC.
ARCHITECTS - ENGINEERS
MONTGOMERY, ALABAMA

U.S. NAVAL STATION ROOSEVELT ROADS, P.R.
REPAIRS TO NAVAL HOSPITAL
ENLARGED FLOOR PLAN -- MECH PENTHOUSE NO.2 BLOCK "C"

CONSTR. CONTR. NO. | SPECIFICATION NO. | NAVFAC DRWG. NO. | TF NO. | SHEET ? OF ??

SEAL AREA

DAG. DV. DIR.: DATE: SATISFACTORY TO: DATE: DESIGN BY: ??? DRAWN BY: ??? CHK. BY: ??? APPROVED:

DATE	REVISION DESCRIPTION

NAVAL FACILITIES ENGINEERING COMMAND
DEPARTMENT OF THE NAVY
NAVY PUBLIC WORKS CENTER, JACKSONVILLE, FL
U.S. NAVAL STATION ROOSEVELT ROADS, P.R.
REPAIRS TO NAVAL HOSPITAL
ENLARGED FLOOR PLAN - MECH PENTHOUSE NO.2 BLOCK "C"

CONSTR. CONTR. NO. | NAVFAC DWG. NO. | PWC DWG. NO.

PLATE NO.
M4-2

PWC #