CWS = chilled H2O supply
CWR = " " Return

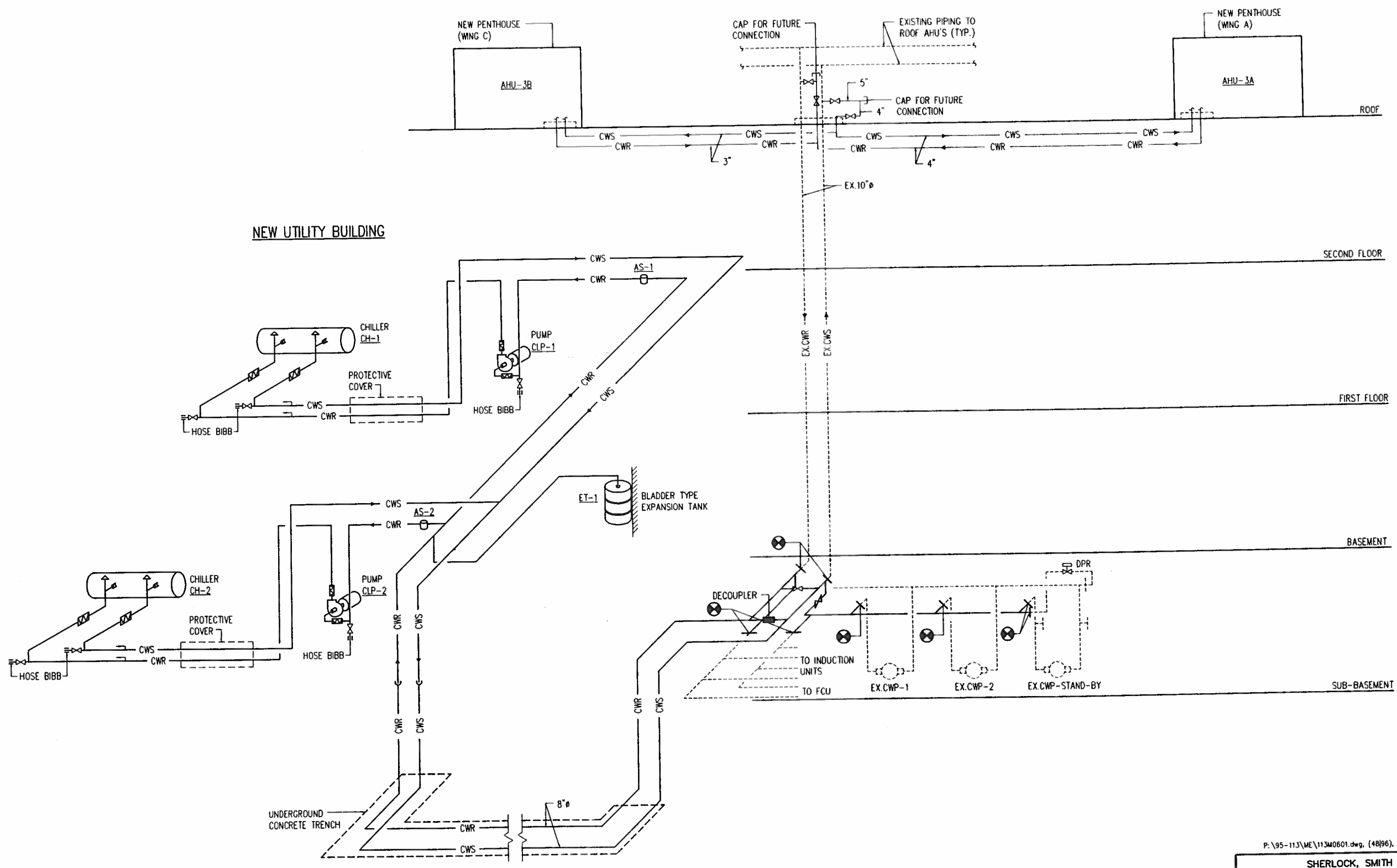

P:\95-113\ME\113M0601.dwg, (48|96), 02/27/96 at 09:32:60 by WINGARD_M

SHERLOCK, SMITH & ADAMS, INC.
ARCHITECTS – ENGINEERS
MONTGOMERY, ALABAMA

U.S. NAVAL STATION ROOSEVELT ROADS, P.R.
REPAIRS TO NAVAL HOSPITAL
MECHANICAL FLOW DIAGRAM – CHILLED WATER

CONSTR. CONTR. NO. | SPECIFICATION NO. | NAVFAC DRWG. NO | TF NO | SHEET ? OF ??

ENG. DIV. DIR. | DATE | SATISFACTORY TO | DATE | DESIGN BY: ??? | DRAWN BY: ??? | CHK. BY: ??? | APPROVED: ???

REVISION DESCRIPTION | DATE

NAVAL FACILITIES ENGINEERING COMMAND
DEPARTMENT OF THE NAVY
NAVY PUBLIC WORKS CENTER, JACKSONVILLE, FL
U.S. NAVAL STATION ROOSEVELT ROADS, P.R.
REPAIRS TO NAVAL HOSPITAL
MECHANICAL FLOW DIAGRAM – CHILLED WATER

PWC DWG. NO | NAVFAC DWG. NO | CONSTR. CONTR. NO.

PLATE NO
M6-1

PWC #

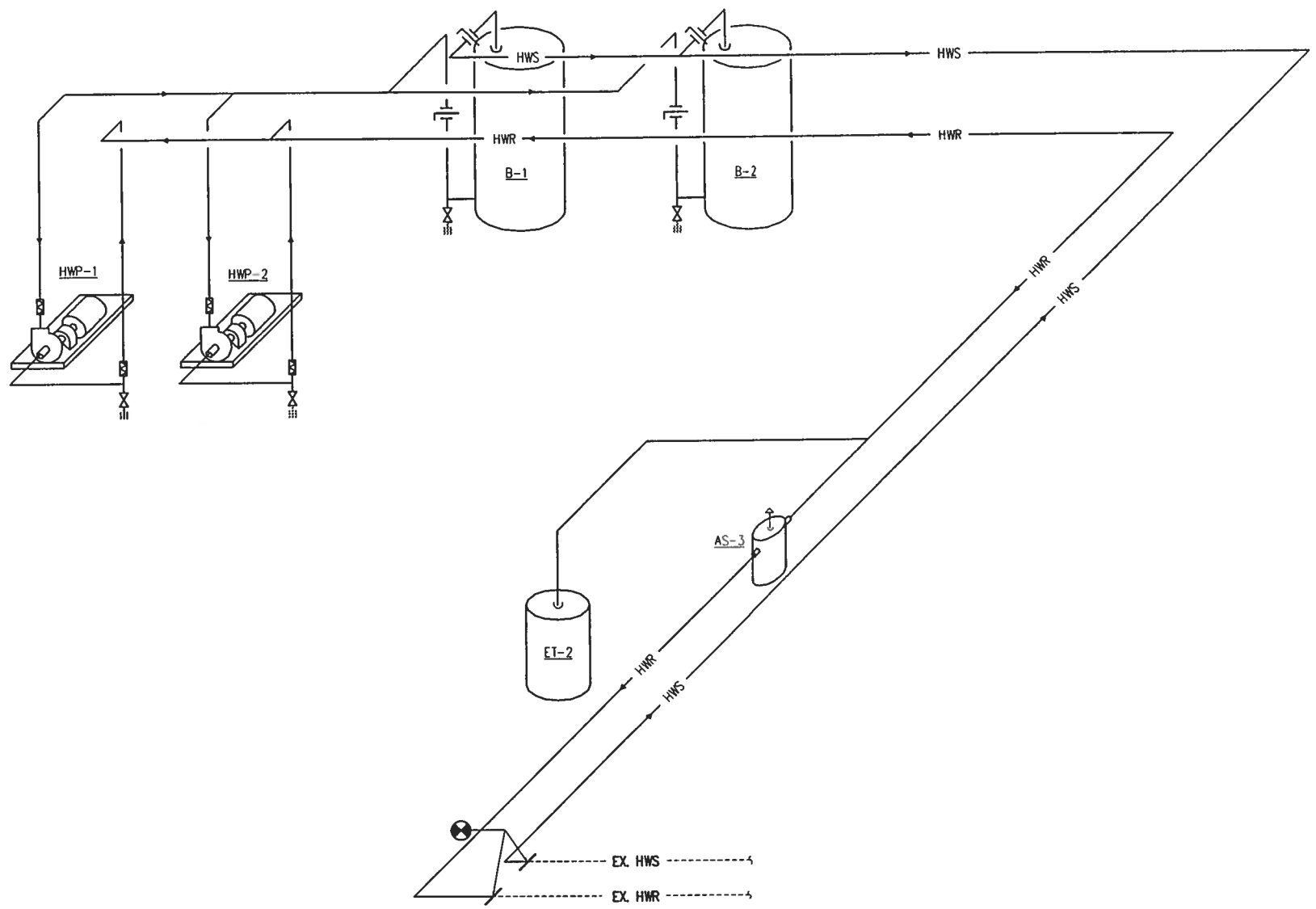

P:\95-113\ME\113M0602.dwg, (48|96), 02/27/96 at 09:50:30 by WINCARD_M

SHERLOCK, SMITH & ADAMS, INC.
ARCHITECTS – ENGINEERS
MONTGOMERY, ALABAMA

U.S. NAVAL STATION ROOSEVELT ROADS, P.R.
REPAIRS TO NAVAL HOSPITAL
MECHANICAL FLOW DIAGRAM – HOT WATER HEATING

CONSTR. CONTR. NO. | SPECIFICATION NO. | NAVFAC DRWG. NO. | TF NO. | SHEET ? OF ??

SEAL AREA

ENG. DIV. DIR. | DATE: | SATISFACTORY TO: | DATE | DESIGN BY: ??? | DRAWN BY: ??? | CHK. BY: ??? | APPROVED:

REVISION DESCRIPTION	DATE

NAVAL FACILITIES ENGINEERING COMMAND
DEPARTMENT OF THE NAVY
NAVY PUBLIC WORKS CENTER, JACKSONVILLE, FL
U.S. NAVAL STATION ROOSEVELT ROADS, P.R.
REPAIRS TO NAVAL HOSPITAL
MECHANICAL FLOW DIAGRAM – HOT WATER HEATING

PWC DWG. NO. | NAVFAC DWG. NO. | CONSTR. CONTR. NO.

PLATE NO.
M6-2

PWC #

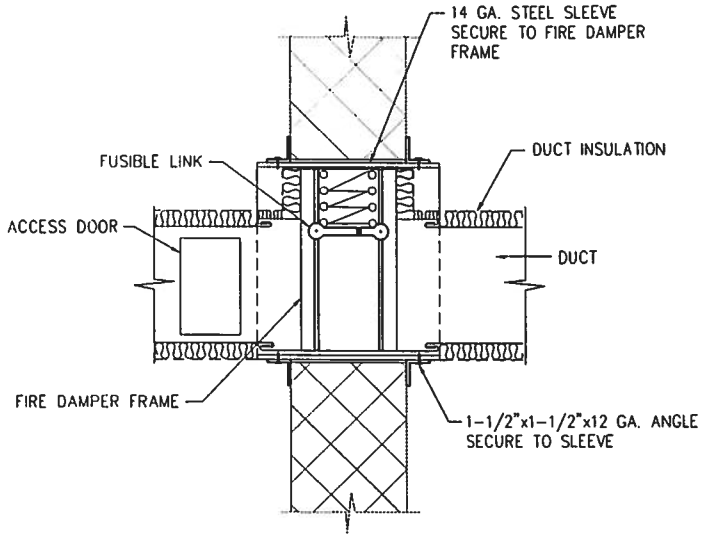

HORIZONTAL LOW PRESSURE DUCT FIRE DAMPER (INSULATED DUCT)

NOT TO SCALE

X / XX|XX

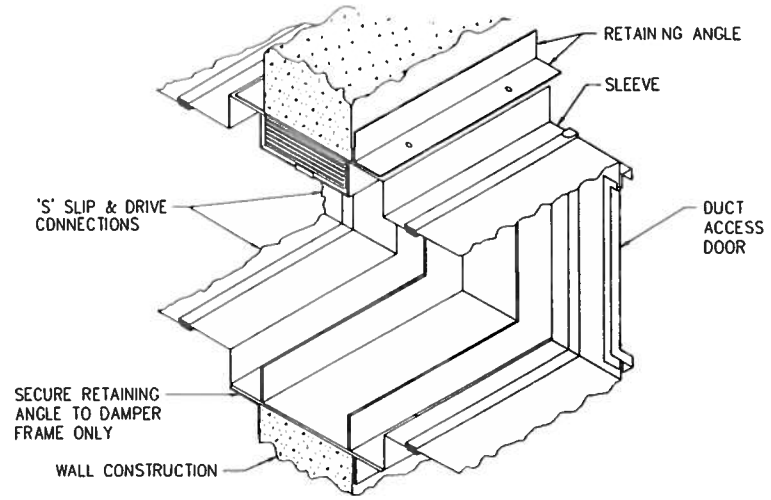

HORIZONTAL LOW PRESSURE FIRE DAMPER DETAIL (NON-INSULATED DUCT)

NOT TO SCALE

X / TYP.|XX

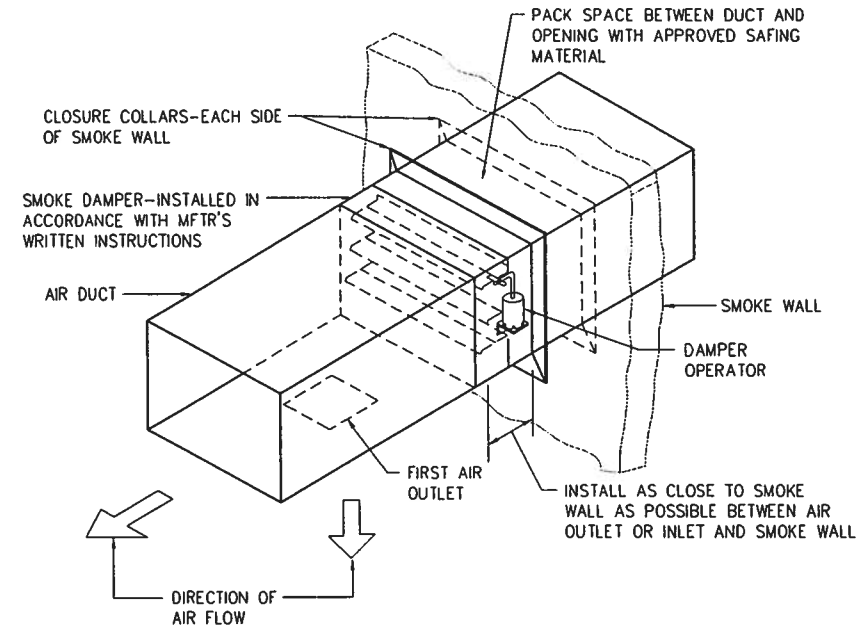

HORIZONTAL LOW PRESSURE SMOKE DAMPER

NOT TO SCALE

X / TYP.|XX

NOTE:

LISTED COMBINATION SMOKE/FIRE DAMPER MAY BE USED IN LIEU OF INDIVIDUAL DAMPERS.

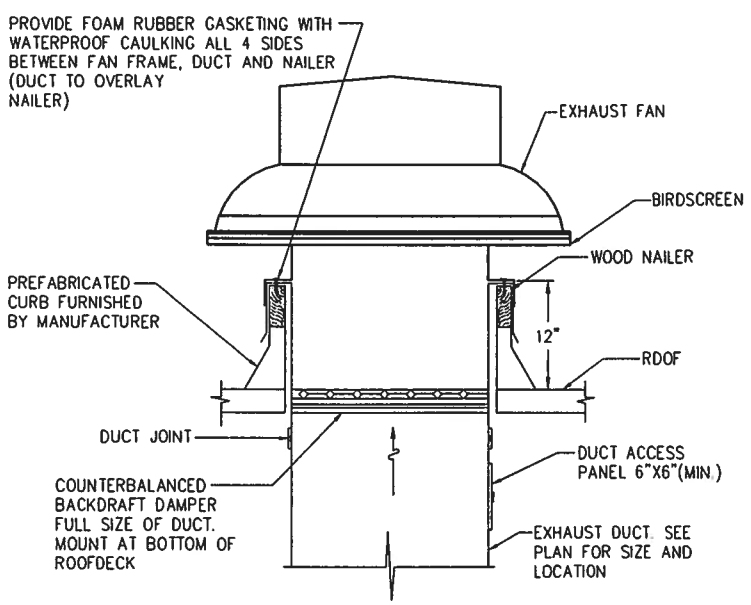

EXHAUST FAN

NOT TO SCALE

X / XX|XX

DESIGN NOTES

1. DUCT ACCESS SHOULD BE AS BIG AS DUCT WILL ALLOW TO GIVE ACCESS TO DAMPER. SHOW SIZE ON PLAN.
2. IF FAN IS DIRECT DRIVE AND EXHAUSTING CONDITIONED AIR, PROVIDE A BALANCING DAMPER.

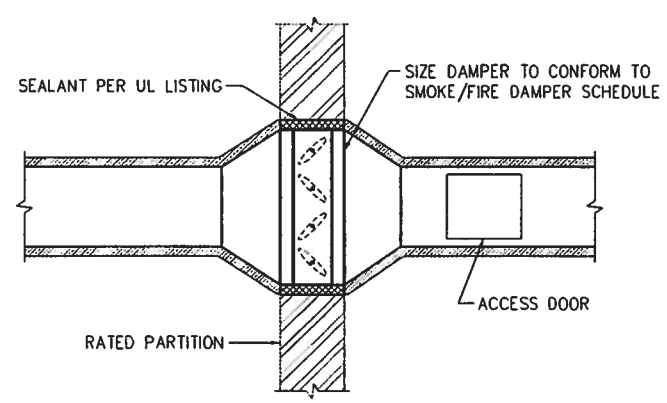

SMOKE/FIRE DAMPERS IN MEDIUM PRESSURE DUCT

NOT TO SCALE

X / TYP.|XX

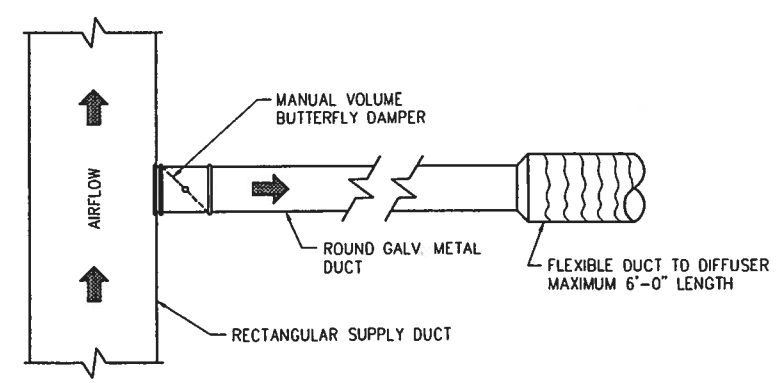

SPIN-IN AIR EXTRACTOR

NOT TO SCALE

X / XX|XX

SMOKE/FIRE DAMPER (SFD)

LOCATION	CLASS	MAX. LEAKAGE @ 1" W.C.	MAX. LEAKAGE @ 4" W.C.	TEMPERATURE CLASSIFICATION	* MAX. LOSS IN INCHES WG	FUSIBLE LINK TEMP °F.	DAMPER TYPE	REMARKS
MED. PRESSURE SUPPLY	1	4 CFM/ SQ. FT.	8 CFM/ SQ. FT.	350°F	0.11 @ 2,500 FPM	165	AIRFOIL BLADES	
MED. PRESSURE SUPPLY & RETURN	1	4 CFM/ SQ. FT.	8 CFM/ SQ. FT.	350°F	0.11 @ 2,500 FPM	165	-	

P:\95-113\ME\113M0701.dwg, (48|96), 03/01/96 at 09:25:37 by DUFFEE_R

SHERLOCK, SMITH & ADAMS, INC.
ARCHITECTS - ENGINEERS
MONTGOMERY, ALABAMA

U.S. NAVAL STATION ROOSEVELT ROADS, P.R.
REPAIRS TO NAVAL HOSPITAL
MECHANICAL DETAILS

CONSTR. CONTR. NO. | SPECIFICATION NO. | NAVFAC DRWG. NO. | TF NO.
SHEET ? OF ??

SEAL AREA

ENG. DIV. DIR. | DATE | SATISFACTORY TO: | DATE | DESIGN BY DUFFEE | DRAWN BY TAYLOR | CHK. BY: YOUNG | APPROVED:

REVISION DESCRIPTION | DATE

NAVAL FACILITIES ENGINEERING COMMAND
DEPARTMENT OF THE NAVY
NAVY PUBLIC WORKS CENTER, JACKSONVILLE, FL
U.S. NAVAL STATION ROOSEVELT ROADS, P.R.
REPAIRS TO NAVAL HOSPITAL
MECHANICAL DETAILS

PWC DWG. NO. | NAVFAC DWG. NO. | CONSTR. CONTR. NO.

PLATE NO
M7-1

PWC #

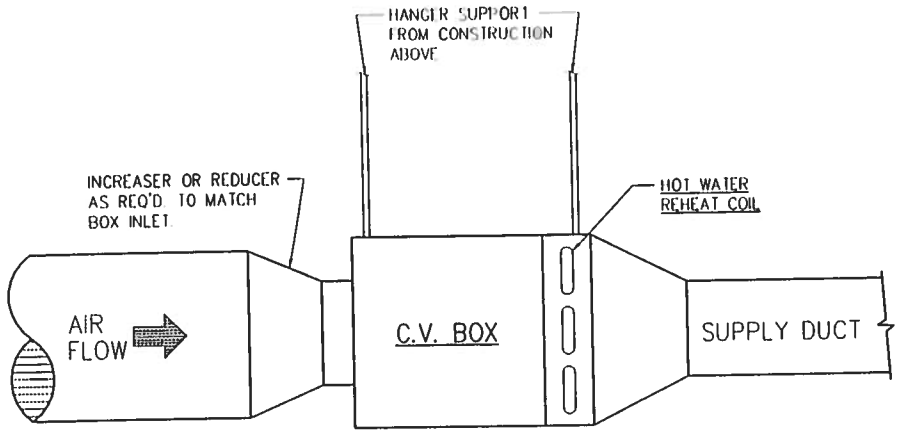

C.V.T.R. BOX CONFIGURATION

NOT TO SCALE

NOTE :
REHEAT HOT WATER PIPING SHALL BE SUPPORTED INDEPENDENT OF C.V.T.R. BOX.

X TYP. XX

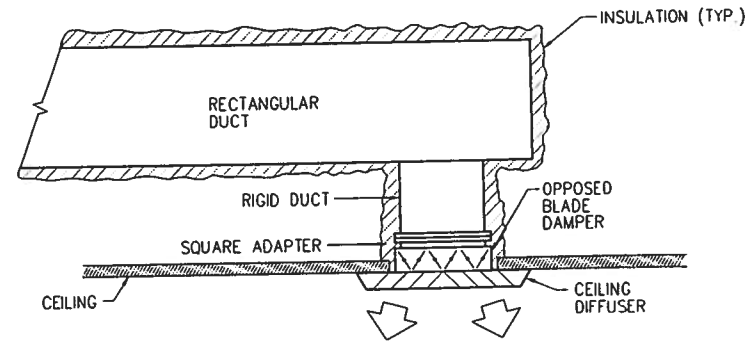

CEILING DIFFUSER CONNECTION

NOT TO SCALE

X TYP. XX

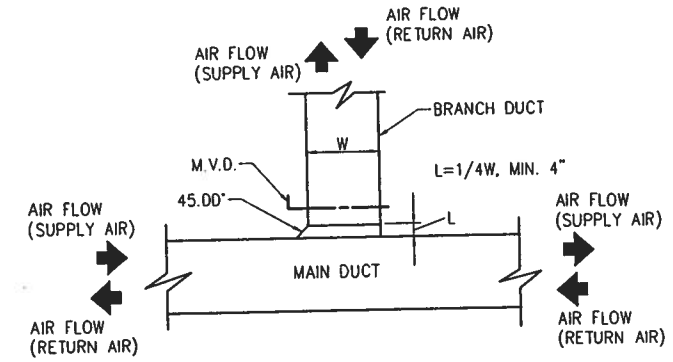

SUPPLY AND RETURN AIR DUCT BRANCH CONNECTION

NOT TO SCALE

X TYP. XX

NOTE: THE FOLLOWING ADDITIONAL DETAILS ARE PROPOSED TO BE INCLUDED IN THIS DESIGN:

CHILLER PIPING
CHILLED WATER COIL PIPING
AIR SEPARATOR PIPING – CW SYSTEM
HOT WATER COIL PIPING
PUMP PIPING
FIXED PIPE SUPPORT
ONE SHOT FEEDER PIPING
MEDIUM & HIGH PRESSURE STEAM MAIN DRIP
FLASH TANK PIPING DIAGRAM
DUPLEX CONDENSATE PUMP PIPING
STEAM RELIEF VALVE DRIP PAN
AIR SEPARATOR – HW SYSTEM
CUSTOM PIPE BOX
EXTERIOR PENETRATION
PIPE SLEEVE THRU INTERIOR WALL
PIPE PENETRATION OF FIRE WALL
INSULATED ROUND DUCT PENETRATION
RECTANGULAR DUCT PENETRATION
RISER SUPPORT
RISER CLAMP
DOUBLE BOLT PIPE CLAMP
PIPE SUPPORT DETAILS
CONCRETE CLEVIS PLATE
PIPE SADDLE STAND
VERTICAL & HORIZONTAL SUPPORTS
LATERAL SUPPORT PERPENDICULAR TO HORIZONTAL PIPES
BRACING FOR VIBRATION ISOLATED PIPES
TYPICAL DUCT BRACING
LATERAL RESTRAINT FOR DUCTWORK
SUSPENDED EQUIPMENT W/VIBRATION MOUNT
VIBRATION ISOLATOR (BASE)
VIBRATION ISOLATOR – TYPE VI-1
VIBRATION ISOLATOR – TYPE VI-2
VIBRATION ISOLATOR – TYPE VI-4
VIBRATION ISOLATOR – TYPE HS
VIBRATION ISOLATOR – TYPE MS

P:\95-113\ME\113M0702.dwg, (48|96), 03/01/96 at 09:11:08 by WRENN_V

SHERLOCK, SMITH & ADAMS, INC.
ARCHITECTS – ENGINEERS
MONTGOMERY, ALABAMA

U.S. NAVAL STATION ROOSEVELT ROADS, P.R.
REPAIRS TO NAVAL HOSPITAL
MECHANICAL DETAILS

CONSTR. CONTR. NO. | SPECIFICATION NO. | NAVFAC DRWG. NO. | TF NO. | SHEET ? OF ??

SEAL AREA

ENG. DIV. DIR. | DATE | SATISFACTORY TO | DATE

DESIGN BY DUFFEE DRAWN BY TAYLOR
CHK. BY YOUNG APPROVED

DATE | REVISION DESCRIPTION

DEPARTMENT OF THE NAVY
NAVAL FACILITIES ENGINEERING COMMAND
NAVY PUBLIC WORKS CENTER, JACKSONVILLE, FL

U.S. NAVAL STATION ROOSEVELT ROADS, P.R.
REPAIRS TO NAVAL HOSPITAL
MECHANICAL DETAILS

CONSTR. CONTR. NO. | NAVFAC DRWG. NO. | PWC DWG. NO.

PLATE NO.
M7-2

PWC #

AIR HANDLING UNIT SCHEDULE

MARK	TYPE UNIT	AREA SERVED	SUPPLY FAN: TOTAL CFM	SUPPLY FAN: MINIMUM OUTSIDE AIR CFM	SUPPLY FAN: TOTAL STATIC PRESSURE (IN WA) (2)	SUPPLY FAN: FAN TYPE	SUPPLY FAN: FAN H.P.	SUPPLY FAN: POWER V	SUPPLY FAN: POWER P	SUPPLY FAN: POWER C	COOLING COIL: COIL AIR CFM	COOLING COIL: MAX. COIL FACE VEL FPM	COOLING COIL: AIR SIDE PRESS. DROP (IN WA)	COOLING COIL: TOTAL COOLING CAP. BTU/HR.	COOLING COIL: ENT. AIR D.B. (°F)	COOLING COIL: ENT. AIR W.B. (°F)	COOLING COIL: CHILLED WATER ENT. WATER TEMP. °F	COOLING COIL: CHILLED WATER LVG. WATER TEMP. °F	COOLING COIL: CHILLED WATER CHILLED WATER G.P.M.	COOLING COIL: RUNOUT PIPE SIZE SUPPLY	COOLING COIL: RUNOUT PIPE SIZE RETURN	COOLING COIL: MAXIMUM AIR P.D. IN. W.C.	REMARKS
AHU-3A	(1)	OPERATING	12,170	3,370	5.60"	BI	20	460	3	60	12,170	500	1.00	565,175	78.6	65.9	45	55	113.0	4"	4"	15.0	PROVIDE 2-WAY CONTROL VALVE
AHU-3B	(1)	DELIVERY	10,360	2,200	5.60"	BI	15	460	3	60	10,360	500	1.00	405,594	74.7	63.7	45	55	81.1	3"	3"	15.0	PROVIDE 2-WAY CONTROL VALVE
								2															

(1) HORIZONTAL, CENTRAL STATION AHU, W/ CHILLED WATER COOLING COIL & B.I. FAN, MAX. COILING COIL WT'R P.D.=10 FT. H.O., VARIABLE AIR VOLUME

CHILLER SCHEDULE

MARK	EVAPORATOR: TONS	EVAPORATOR: GPM	EVAPORATOR: ENTERING WATER (°F)	EVAPORATOR: LEAVING WATER (°F)	EVAPORATOR: MAXIMUM PRESSURE DROP (FT)	CONDENSER: FOULING FACTOR	CONDENSER: FANS DRIVE	CONDENSER: FANS DISCHARGE	COMPRESSORS: TYPE	COMPRESSORS: PERCENT CAPACITY REDUCTION	MINIMUM EER INCLUDING FANS & COMPRESSORS	ELECTRICAL: VOLTS	ELECTRICAL: PHASE	ELECTRICAL: CYCLE	ELECTRICAL: MAXIMUM MCA	ELECTRICAL: COMPRESSORS MAXIMUM RLA	ELECTRICAL: COMPRESSORS MAXIMUM LRA *	ELECTRICAL: FANS MAXIMUM TOTAL FLA	REMARKS
CH-1	225	540	55	45	16		DIRECT	VERTICAL	ROTARY SCREW	100 TO 25	9.4	460	3	60	562	410	2500	52	
CH-2	225	540	55	45	16		DIRECT	VERTICAL	ROTARY SCREW	100 TO 25	9.4	460	3	60	562	410	2500	52	

* BASED ON ACROSS-THE-LINE STARTER

EXPANSION TANK/AIR SEPARATOR SCHEDULE

UNIT NO.	SYSTEM	TYPE	APPROX. SYSTEM VOL. GAL.	APPROX. SIZE	SYSTEM TEMP RANGE °F MIN.	SYSTEM TEMP RANGE °F MAX.	INITIAL PRESS. IN TANK PSIG	PRV FILL PRESS. AT TANK PSIG	MAX. OPER. PRESS. RELIEF VALVE PSIG	MAX. OPER. PRESS. AT TANK PSIG	MIN. VOL. GALLON	MIN. ACCEPT. VOLUME GALLON	AIR SEPARATOR UNIT No.	AIR SEPARATOR SIZE	AIR SEPARATOR GPM	AIR SEPARATOR MAX. P.D. FT.	AIR SEPARATOR BUILT-IN STRAINER REQUIRED	PIPE SIZE TO TANK	COLD WATER FILL SIZE	
ET-1	COOLING	VERTICAL	350	14x26	45	60	0	12	90	90	8	5	AS-1	4"	147.0	5	YES	1¼"	¾"	
ET-2	HEATING	VERTICAL	350	16x41	60	180	0	12	105	105	22	12	AS-2	2½"	49.9	5	YES	¾"	¾"	

HOT WATER BOILER SCHEDULE (OIL FIRED)

MARK	DESCRIPTION	MIN. GROSS INPUT CAP. BTU/HR.	MIN. NET HEATING CAP. BTU/HR.	NO. 2 FUEL OIL (G.P.H.)	HOT WATER OPERATING TEMPERATURE (°F)	APPROX. WATER GALLONS	ELECTRICAL: BURNER MOTOR H.P.	ELECTRICAL: VOLTS	ELECTRICAL: PHASE	ELECTRICAL: CYCLE	VENT SIZE INCHES	REMARKS
B-1	VERTICAL FORCED DRAFT, STEEL, TUBELESS OIL FIRED, HOT WATER	2,230,000	1,895,000	18.0	140	300		460	3	60	12"ø	
B-2	VERTICAL FORCED DRAFT, STEEL, TUBELESS OIL FIRED, HOT WATER	2,230,000	1,895,000	18.0	140	300		460	3	60	12"ø	

STEAM BOILER SCHEDULE (OIL FIRED)

MARK	DESCRIPTION	MIN. GROSS INPUT CAP. BTU/HR.	MIN. NET HEATING CAP. BTU/HR.	OPERATING PRESSURE (PSIG)	NO. 2 FUEL OIL (GPH)	POWER: BURNER MOTOR H.P.	POWER: VOLTS	POWER: PHASE	POWER: CYCLE	VENT SIZE INCHES	REMARKS
B-3	VERTICAL FORCED DRAFT, TUBELESS OIL FIRED, STEAM	1,000,000	850,000	20 (ADJ)	9.0	3/4	460	3	60	12"ø	
B-4	VERTICAL FORCED DRAFT, TUBELESS OIL FIRED, STEAM	1,612,000	1,370,000	100 (ADJ)	15.0	3/4	460	3	60	12"ø	

DOMESTIC HOT WATER HEATER SCHEDULE

MARK	DESCRIPTION	MIN. GROSS INPUT CAP. BTU/HR.	MIN. NET HEATING CAP. BTU/HR.	NO. 2 FUEL OIL (GPH)	POWER: BURNER MOTOR H.P.	POWER: VOLTS	POWER: PHASE	POWER: CYCLE	VENT SIZE INCHES	REMARKS
DWH-1	VERTICAL FORCED DRAFT, TUBELESS OIL FIRED, HOT WATER	1,240,000	1,096,000	15.0	1½"	460	3	60	12"ø	

P:\95-113\ME\113M08D1.dwg, (48|96), 03/01/96 at 08:23:36 by DUFFEE_R

SHERLOCK, SMITH & ADAMS, INC.
ARCHITECTS - ENGINEERS
MONTGOMERY, ALABAMA

U.S. NAVAL STATION ROOSEVELT ROADS, P.R.
REPAIRS TO NAVAL HOSPITAL
MECHANICAL SCHEDULES

CONSTR. CONTR. NO. | SPECIFICATION NO. | NAVFAC DRWG. NO. | TF NO. | SHEET ? OF ??

SEAL AREA

DWG. OK DR. | DATE | SATISFACTION TO | DATE | DESIGN BY: ??? | DRAWN BY: ??? | CHK BY: ??? | APPROVED

REVISION DESCRIPTION | DATE

NAVAL FACILITIES ENGINEERING COMMAND
DEPARTMENT OF THE NAVY
NAVY PUBLIC WORKS CENTER, JACKSONVILLE, FL
U.S. NAVAL STATION ROOSEVELT ROADS, P.R.
REPAIRS TO NAVAL HOSPITAL
MECHANICAL SCHEDULES

PWC DWG. NO | NAVFAC DWG. NO | CONSTR. CONTR. NO.

PLATE NO
M8-1

PWC #

AIR TERMINAL UNITS – V.A.V.–R.H. & C.V.–R.H.

MARK	TYPE	DESIGN C.F.M.	MIN. C.F.M. SET PT.	CAPACITY BTU/HR	AIR TEMP. °F		WATER TEMP. °F		G.P.M.	RUNOUT SIZE INCHES	T'STAT LOCATION	REHEAT COIL TYPE	APPROX. BOX SIZE	* MAXIMUM ALLOW. DB 3RD O.B.	MAXIMUM S.P. DROP	MAXIMUM WATER P.D. FT H_2O	REMARKS
					ENT.	LVG.	ENT.	LVG.									
3A/A	2	220	220	7,046	51.0	80.7	180	160	0.7	1/2"	A248	WATER	5"ø	55	0.40	7	–
3A/B	2	220	220	7,019	51.0	80.5	180	160	0.7	1/2"	A246	WATER	5"ø	55	0.40	7	–
3A/C	2	430	430	13,734	51.0	80.6	180	160	1.4	1/2"	A236	WATER	7"ø	55	0.40	7	–
3A/D	2	1480	1480	54,476	51.0	85.1	180	160	5.5	1"	A231	WATER	14"ø	55	0.40	7	–
3A/E	2	1720	1720	53,870	51.0	80.0	180	160	5.4	1"	A250	WATER	16"ø	55	0.40	7	–
3A/F	2	510	510	15,973	51.0	80.0	180	160	1.6	3/4"	D205	WATER	8"ø	54	0.40	7	–
3A/G	2	370	370	11,588	51.0	80.0	180	160	1.2	1/2"	A253	WATER	7"ø	53	0.40	7	–
3A/H	2	530	530	16,600	51.0	80.0	180	160	1.7	3/4"	D219	WATER	8"ø	54	0.40	7	–
3A/J	2	1200	1200	37,584	51.0	80.0	180	160	3.8	1"	A249	WATER	14"ø	52	0.40	7	–
3A/K	2	540	540	16,913	51.0	80.0	180	160	1.7	3/4"	D229	WATER	9"ø	50	0.40	7	–
3A/L	2	600	600	18,792	51.0	80.0	180	160	1.9	3/4"	D228	WATER	9"ø	54	0.40	7	–
3A/M	2	120	120	3,758	51.0	80.0	180	170	0.8	1/2"	D214	WATER	5"ø	50	0.40	7	–
3A/N	2	580	580	18,166	51.0	80.0	180	160	1.8	3/4"	D213	WATER	9"ø	54	0.40	7	–
3A/P	2	390	390	12,215	51.0	80.0	180	160	1.2	1/2"	D209	WATER	7"ø	54	0.40	7	–
3A/Q	2	1840	1840	57,629	51.0	80.0	180	160	5.8	1"	C224	WATER	16"ø	55	0.40	7	–
3A/R	2	200	200	6,264	51.0	80.0	180	160	0.6	1/2"	PENT. NO.1	WATER	5"ø	52	0.40	7	–
3B/A	2	1660	1660	52,558	51.0	80.3	180	160	5.3	1"	C233	WATER	16"ø	53	0.40	7	–
3B/B	2	1530	1530	47,920	51.0	80.0	180	160	4.8	1"	D216	WATER	14"ø	53	0.40	7	–
3B/C	2	220	220	6,890	51.0	80.0	180	160	0.7	1/2"	C235	WATER	5"ø	55	0.40	7	–
3B/D	2	1530	1530	48,644	51.0	80.4	180	160	4.9	1"	C233	WATER	14"ø	53	0.40	7	–
3B/E	2	2310	2310	72,349	51.0	80.0	180	160	7.2	1 1/4"	C222	WATER	24x16	60	0.40	7	–
3B/F	2	200	200	6,264	51.0	80.0	180	160	0.6	1/2"	C226	WATER	5"ø	53	0.40	7	–
3B/G	2	810	810	25,369	51.0	80.0	180	160	2.5	3/4"	C203	WATER	12"ø	50	0.40	7	–
3B/H	2	1950	1950	61,074	51.0	80.0	180	160	6.1	1 1/4"	C208	WATER	16"ø	54	0.40	7	–
3B/J	2	150	150	4,698	51.0	80.0	180	160	0.5	1/2"	PENT. NO. 2	WATER	5"ø	50	0.40	7	–

BOX TYPES:
1. VARIABLE AIR VOLUME W/HEATING COIL.
2. CONSTANT AIR VOLUME W/HEATING COIL.
3. CONSTANT AIR VOLUME – 2 POSITION, W/HEATING COIL FOR REVERSIBLE PRESSURE CHANGE-OVER.
4. CONSTANT AIR VOLUME REGULATOR, EXHAUST SYSTEM.

* DB .5" MININUM P*

FAN SCHEDULE

UNIT NO.	LOCATION	TOTAL AIR C.F.M.	INTERLOCK WITH	TYPE		RPM	TOTAL EXT. S.P. IN. W.C.	DESIGN MOTOR H.P.	MAX. FAN S.P.L. 3rd O.B.	POWER			DRIVE	REMARKS
				FAN	WHEEL					VOLT	PH	CYC		
EF-3B1	ROOF	330	AHU-3B	1	13"	1,148	0.500	1/4	68.8	120	1	60	BELT	
EF-3B2	ROOF	100	AHU-3B	1	13"	837	0.375	1/4	61.0	120	1	60	BELT	
EF-3B3	ROOF	750	AHU-3B	1	13"	951	0.375	1/4	71.6	120	1	60	BELT	
EF-3B4	ROOF	840	AHU-3B	1	13"	1,083	0.500	1/4	74.9	120	1	60	BELT	
EF-3A1	ROOF	420	AHU-3A	1	13"	970	0.500	1/4	76.3	120	1	60	BELT	
EF-3A2	ROOF	670	AHU-3A	1	13"	990	0.500	1/4	73.1	120	1	60	BELT	
RF-3A	ROOF	8,800	AHU-3A	2	20"	1,396	1.500	5.0	92.0	120	1	60	BELT	
RF-3B	ROOF	8,160	AHU-3B	2	18"	1,630	1.250	5.0	94.0	120	1	60	BELT	

FAN TYPES:
1. CENTRIFUGAL ROOF MT'D, MOTORIZED DAMPER, PREFABRICATED CURB.
2. CABINET FAN

DESIGN CONDITIONS

LOCATION	–	SUMMER	WINTER
AREAS TO BE HEATED & COOLED	OUTSIDE	90°FDB/81°FWB	68°FDB/57°FWB
	INSIDE	75°F.,50% R.H., MAX.	68°F.
AREAS TO BE HEATED ONLY	OUTSIDE	–	68°FDB/57°FWB
	INSIDE	–	55°F.

P:\95-113\ME\113M0802.dwg, (48|96), 02/27/96 at 08:21:31 by WINGARD_M

SHERLOCK, SMITH & ADAMS, INC.
ARCHITECTS – ENGINEERS
MONTGOMERY, ALABAMA

U.S. NAVAL STATION ROOSEVELT ROADS, P.R.
REPAIRS TO NAVAL HOSPITAL
MECHANICAL SCHEDULES

CONSTR. CONTR NO. | SPECIFICATION NO. | NAVFAC DRWG. NO. | TF NO. | SHEET ? OF ??

SEAL AREA

ENG. DIV. DIR.: DATE:
SATISFACTORY TO: DATE:
DESIGN BY: ??? DRAWN BY: ???
CHK BY: ??? APPROVED:

REVISION DESCRIPTION	DATE

NAVAL FACILITIES ENGINEERING COMMAND
DEPARTMENT OF THE NAVY
NAVY PUBLIC WORKS CENTER, JACKSONVILLE, FL
U.S. NAVAL STATION ROOSEVELT ROADS, P.R.
REPAIRS TO NAVAL HOSPITAL
MECHANICAL SCHEDULES

PWC DWG. NO. | NAVFAC DWG. NO. | CONSTR. CONTR. NO.

PLATE NO.
M8-2

PWC #