# RETURN AND EXHAUST GRILLE SCHEDULE

R = RETURN AIR GRILLE
E = EXHAUST AIR GRILLE

| MAX. CFM | SIZE ✳✳✳ | EQUIVALENT SIZES ✳ | |
|---|---|---|---|
| 60 | 6 x 6 | | |
| 90 | 6 x 6 | 8 x 4 | |
| 130 | 8 x 6 | 12 x 4 | |
| 170 | 10 x 6 | | |
| 190 | 8 x 8 | 12 x 6 | |
| 230 | 10 x 8 | 14 x 6 | |
| 300 | 10 x 10 | 12 x 8 | 18 x 6 |
| 340 | 12 x 10 | 20 x 6 | |
| 400 | 14 x 10 | 16 x 8 | |
| 450 | 12 x 12 | 16 x 10 | 18 x 8 |
| 530 | 14 x 12 | 18 x 10 | |
| 590 | 14 x 14 | 24 x 8 | |
| 670 | 16 x 14 | 18 x 12 | |
| 800 | 16 x 16 | 24 x 10 | |
| 900 | 18 x 16 | 24 x 12 | |
| 1040 | 18 x 18 | 24 x 14 | 30 x 12 |
| 1220 | 20 x 18 | 26 x 14 | |
| 1390 | 22 x 20 | 26 x 16 | 30 x 14 |
| 1550 | 24 x 20 | 30 x 16 | 36 x 14 |
| | | | |
| ✳✳ | | | |

NOTES:
✳ SELECT EQUIVALENT SIZES ONLY IF REQUIRED BY DUCTWORK LIMITATIONS.
✳✳ LARGER CAPACITIES SHALL USE MULTIPLE GRILLES.
✳✳✳ CONTRACTOR MAY SUBSTITUTE ROUND NECK OF EQUIVILENT SIZES
- MAX STATIC PRESSURE DROP FOR RETURN & EXHAUST GRILLES & REGISTERS SHALL BE .10 IN W.C

# DUCT CONSTRUCTION & LEAK TEST SCHEDULE

| SYSTEM | DUCT PRESSURE CLASS: SUPPLY DUCT FROM AHU TO TERMINAL UNIT | SUPPLY DUCT FROM TERMINAL UNIT TO FINAL FILTER | SUPPLY DUCT FROM FINAL FILTER TO ROOM INLET | SUPPLY DUCT FROM TERMINAL UNIT TO ROOM INLET | RETURN DUCT | EXHAUST AIR DUCT | OUTSIDE AIR DUCT | DUCT SEAL CLASS | DUCT TEST PRESSURE | DUCT LEAK CLASS: RECTANGULAR | ROUND | REMARKS |
|---|---|---|---|---|---|---|---|---|---|---|---|---|
| AHU-1 | 6 | 2 | 1 | 1 | 2 N | ½ N | ½ N | A | 8" | 6 | 3 | ① |
| AHU-2 | 6 | 2 | 1 | 1 | 2 N | ½ N | ½ N | A | 8" | 6 | 3 | ① |
| | | | | | | | | | | | | |

NOTES: 1 - ONLY THE SUPPLY DUCT FROM THE SUPPLY FAN DISCHARGE TO THE TERMINAL UNIT INLET WILL BE DUCT LEAK TESTED

# FILTER SCHEDULE

| FILTER UNIT NO. | EQUIPMENT OR ROOM SERVED | LOCATION ✳ | C.F.M. | MINIMUM EFFICIENCY ✳✳ | FILTER MAX. FACE VELOCITY | FILTER MAX. P.D. IN. W.C. CLEAN | CARTRIDGE: SIZE HxWxD | CARTRIDGE: NUMBER | FILTER BANKING ARRANGEMENT | RECOMMENDED FILTER CHANGE OUT P.D. IN. $H_2O$ | REMARKS |
|---|---|---|---|---|---|---|---|---|---|---|---|
| FF-3A/A | A247,A248 | A202 | 220 | 90% | 300 | 0.4 | 24x12x12 | 1 | ② | 1.0 | |
| FF-3A/B | A246 | A202 | 220 | 90% | 300 | 0.4 | 24x12x12 | 1 | ② | 1.0 | |
| FF-3A/C | A236 | A202 | 430 | 90% | 300 | 0.4 | 24x12x12 | 1 | ② | 1.0 | |
| FF-3A/D | A231,A234 | A234 | 1480 | 90% | 300 | 0.4 | 24x12x12 / 24x24x12 | 1 / 1 | ② | 1.0 | |
| FF-3A/E | A250 | A251 | 1720 | 90% | 300 | 0.4 | 24x12x12 / 24x24x12 | 1 / 1 | ② | 1.0 | |
| FF-3A/G | A253,A254 | A254 | 370 | 90% | 300 | 0.4 | 24x12x12 | 1 | ② | 1.0 | |
| FF-3A/H | D218,D219,D221 | D205 | 530 | 90% | 300 | 0.4 | 24x12x12 | 1 | ② | 1.0 | |
| FF-3A/K | D229,D228 | D221 | 540 | 90% | 300 | 0.4 | 24x12x12 | 1 | ② | 1.0 | |
| FF-3A/L | D230 | D221 | 600 | 90% | 300 | 0.4 | 24x12x12 | 1 | ② | 1.0 | |
| FF-3A/M | D214 | D206 | 120 | 90% | 300 | 0.4 | 24x12x12 | 1 | ② | 1.0 | |
| FF-3A/O | C224 | C233 | 1840 | 90% | 310 | 0.4 | 24x12x12 / 24x24x12 | 1 / 1 | ② | 1.0 | |
| FF-3B/A | C233 | C239 | 1660 | 90% | 300 | 0.4 | 24x12x12 / 24x24x12 | 1 / 1 | ② | 1.0 | |
| FF-3B/B | 0216 | 0211 | 1530 | 90% | 300 | 0.4 | 24x12x12 / 24x24x12 | 1 / 1 | ② | 1.0 | |
| FF-3B/D | C233 | C201 | 1530 | 90% | 300 | 0.4 | 24x12x12 / 24x24x12 | 1 / 1 | ② | 1.0 | |
| FF-3B/E | C203A,C222,C223 | C203A | 2310 | 90% | 300 | 0.4 | 24x24x12 | 2 | ② | 1.0 | |
| FF-3B/H | C208 | C203 | 1950 | 99.97% | 300 | 0.4 | 24x24x12 | 2 | ② | 1.0 | |
| FF-1A | D227 | D202 | 150 | 90% | 300 | 0.4 | 24x12x12 | 1 | ② | 1.0 | |
| PF-3A | AHU-3A | PENT. 1 | 12,170 | 25% | 300 | 0.15 | - | - | ① | 0.3 | |
| PF-3B | AHU-3B | PENT. 2 | 10,360 | 25% | 300 | 0.15 | - | - | ① | 0.3 | |
| IF-3B | AHU-3B | PENT. 2 | 10,360 | 90% | 400 | 0.45 | - | - | ① | 1.0 | |
| | | | | | | | | | | | |

✳ ABOVE CEILINGS OR IN MECHANICAL PENTHOUSES
✳✳ FILTER EFFICIENCY BASED ON ASHRAE 52-76 TEST STANDARD

NOTES:
① NO. OF FILTERS OF SIZE & QUANTITY TO MOUNT IN FILTER/MIXING BOX OF AHU TO BE FURNISHED.
② BOTTTOM ACCESS FILTER & HOUSING

# PUMP SCHEDULE

| MARK | SERVICE | MAX. R.P.M. | G.P.M. | MIN. HEAD FT. $H_2O$ | MIN. MOTOR SIZE H.P. | POWER: VOLTS | PH. | CY. | TYPE | PIPING CIRCUIT SERVED | LOCATION | REMARKS |
|---|---|---|---|---|---|---|---|---|---|---|---|---|
| HWP-1 & HWP-2 | HOT WATER | 1,760 | 190 | 60' | 5 | 460 | 3 | 60 | BASE M'TD END SUCTION | HWS & HWR | MECH RM SUB BSMT. | |
| CLP-1 & CLP-2 | CHILLED WATER | 1,760 | 540 | 54' | 10 | 460 | 3 | 60 | BASE M'TD END SUCTION | CWS & CWR | MECH RM UTILITY BLDG. | |
| | | | | | | | | | | | | |

# SUPPLY AIR DIFFUSER SCHEDULE

| CFM | DESCRIPTION | SIZE ✳ | THROW | MIN. INLET SIZE | REMARKS |
|---|---|---|---|---|---|
| 100 | SQ CLG DIFF | 6 x 6 | 4-WAY | 6"ø | |
| 225 | SQ CLG DIFF | 9 x 9 | 4-WAY | 8"ø | |
| 400 | SQ CLG DIFF | 12 x 12 | 4-WAY | 10"ø | |
| 630 | SQ CLG DIFF | 15 x 15 | 4-WAY | 12"ø | |
| | | | | | |

✳ DIFFUSERS SHALL BE 4-WAY THROW UNLESS OTHERWISE SHOWN ON THE PLANS. DIFFUSERS MOUNTED IN ACOUSTICAL TILE CEILINGS SHALL BE DESIGNED TO FIT INTO A 24x24 "T" BAR SYSTEM. SEE REFLECTED CLG. PLANS FOR LOCATIONS AND CEILING TYPE.

- MAX STATIC PRESSURE DROP FOR SUPPLY AIR DIFFUSERS SHALL BE .10 IN. W.C.

# FUEL OIL DAY TANK SYSTEMS

| SYMBOL | TANK VOLUME (GALLONS) | TANK MATERIAL (GAUGE) | RUPTURE BASIN CAPACITY (% TANKS) | PUMP: MIN. CAPACITY (GPM) | MIN. LIFT (FT) | ELECTRICAL: APPROX. MOTOR H.P. | VOLTS | PH. | CY. | REMARKS |
|---|---|---|---|---|---|---|---|---|---|---|
| DTS-1 | 100 | 12 | 150 | 4.5 | 17 | 1/2 | 460 | 3 | 60 | OVERFLOW ALARM & REVERSE PUMPING SYSTEM |
| | | | | | | | | | | |

P:\95-113\ME\113M0803.dwg, (48|96), 02/27/96 at 10:17:49 by WINGARD_M

SHERLOCK, SMITH & ADAMS, INC.
ARCHITECTS - ENGINEERS
MONTGOMERY, ALABAMA

U.S. NAVAL STATION ROOSEVELT ROADS, P.R.
REPAIRS TO NAVAL HOSPITAL
MECHANICAL SCHEDULES

CONSTR. CONTR. NO. | SPECIFICATION NO. | NAVFAC DRWG. NO | TF NO. | SHEET ? OF ??

DEPARTMENT OF THE NAVY
NAVY PUBLIC WORKS CENTER, JACKSONVILLE, FL
NAVAL FACILITIES ENGINEERING COMMAND
U.S. NAVAL STATION ROOSEVELT ROADS, P.R.
REPAIRS TO NAVAL HOSPITAL
MECHANICAL SCHEDULES

CONSTR. CONTR. NO. | NAVFAC DWG. NO. | PWC DWG. NO.

PLATE NO
M8-3

PWC #

REVISION DESCRIPTION | DATE
ENG. DIV. DIR.: | DATE:
SATISFACTORY TO: | DATE:
DESIGN BY: ??? | DRAWN BY: ???
CHK BY: ??? | APPROVED:

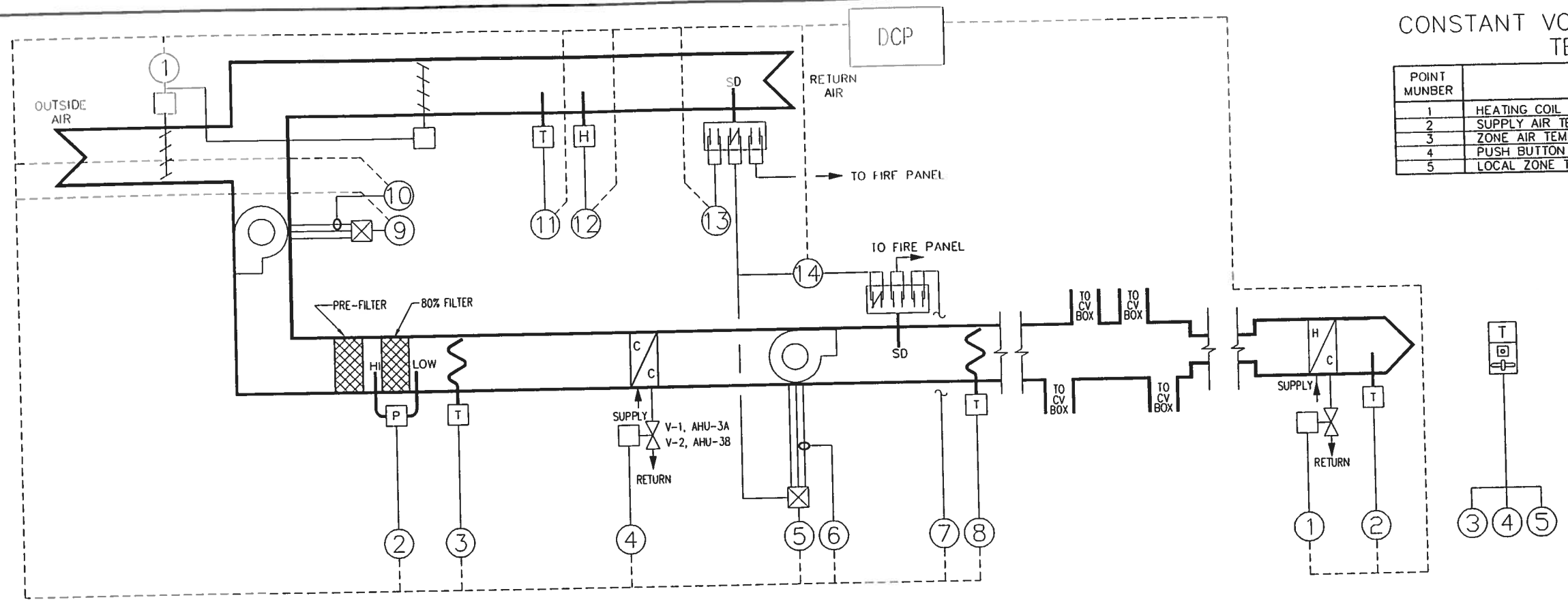


# CONSTANT VOLUME TERMINAL REHEAT TERMINAL BOX

| POINT MUNBER | POINT DESCRIPTION | TYPE |
|---|---|---|
| 1 | HEATING COIL VALVE | AO |
| 2 | SUPPLY AIR TEMPERATURE | AI |
| 3 | ZONE AIR TEMPERATURE | AI |
| 4 | PUSH BUTTON OCCUPANCY OVERRIDE | DI |
| 5 | LOCAL ZONE TEMPERATURE SETPOINT ADJUSTMENT | AI |

**CONTROL LEGEND**

| | |
|---|---|
| DCP | DIGITAL CONTROL PANEL |
| DDC | DIRECT DIGITAL CONTROL |
| VAV | VARIABLE AIR VOLUME |
| CV | CONSTANT AIR VOLUME |
| CVTR | CONSTANT VOLUME TERMINAL REHEAT |
| SD | SMOKE DETECTOR |
| O.A. | OUTDOOR AIR |
| OAD | OUTSIDE AIR DAMPER |
| R.A. | RETURN AIR |
| RAD | RETURN AIR DAMPER |
| N.O | NORMALLY OPEN |
| N.C. | NORMALLY CLOSED |
| C | COMMON |
| CWS | CHILLER WATER SUPPLY |
| CWR | CHILLED WATER RETURN |
| HWS | HOT WATER SUPPLY |
| HWR | HOT WATER RETURN |
| ① | THERMOSTAT |

| POINT MUNBER | POINT DESCRIPTION | TYPE |
|---|---|---|
| | | |
| | | |
| 1 | OUTSIDE, RETURN AIR DAMPERS | AO |
| 2 | FILTER STATUS (DIFFERENTIAL PRESSURE) | AI |
| 3 | AVERAGE MIXED AIR TEMPERATURE | AI |
| 4 | COOLING COIL VALVE | AO |
| 5 | SUPPLY FAN START/STOP | DO |
| 6 | SUPPLY FAN CURRENT | AI |
| 7 | SUPPLY DUCT SMOKE INDICATION | DI |
| 8 | AVERAGE SUPPLY AIR TEMPERATURE | AI |
| 9 | RETURN FAN START/STOP | DO |
| 10 | RETURN FAN CURRENT | AI |
| 11 | RETURN AIR TEMPERATURE | AI |
| 12 | RETURN AIR HUMIDITY | AI |
| 13 | RETURN DUCT SMOKE INDICATION | DI |
| 13 | SUPPLY DUCT SMOKE INDICATION | DI |

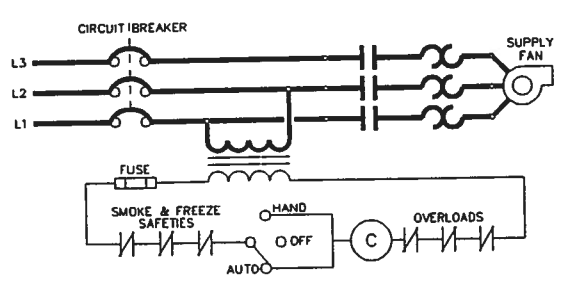


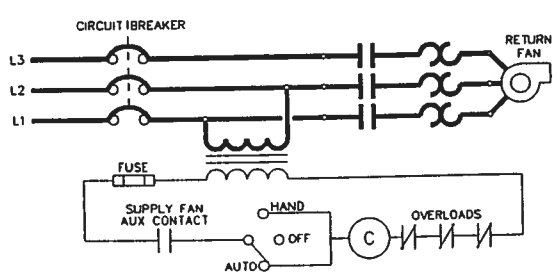


## SEQUENCE OF CONTROL:

### GENERAL:

(A) WHEN PLACED IN OPERATION THE CONTROL SYSTEMS SHALL BE ENERGIZED THRU HAND-OFF-AUTO SWITCHES (WHEN IN AUTO POSITION), DAMPERS SHALL OPEN TO THEIR RESPECTIVE POSITIONS AND AFTER A VARIABLE TIME DELAY THE AIR HANDLING UNIT FAN/S AND THEIR INTERLOCKED FANS SHALL START. THE SYSTEM MAY ALSO BE ENERGIZED FROM THE TERMINAL UNIT THERMOSTATS (SEE TERMINAL UNIT CONTROL).

(B) WHENEVER AIR HANDLING UNIT/S ARE STOPPED CONTROL SYSTEM SHALL BE DE-ENERGIZED AND DAMPERS SHALL CLOSE, AIR HANDLING UNIT/S AND INTERLOCKED FANS SHALL STOP.

(C) ANY DUCT SMOKE DETECTOR SENSING SMOKE SHALL SIGNAL THE FIRE ALARM CONTROL PANEL, AND ALSO SEND A SIGNAL TO THE RESPECTIVE AIR HANDLING UNIT. WHEN SIGNAL IS RECEIVED BY THE AIR HANDLING UNIT, THE UNIT SHALL STOP AND INTERLOCKED FANS SHALL STOP UNLESS OTHERWISE INDICATED. THE SYSTEM MAY ONLY BE RESTARTED BY THE FIRE DEPARTMENT OR OTHER QUALIFIED PERSONNEL FROM THE FIRE ALARM CONTROL PANEL. WHEN AN ALL CLEAR SIGNAL IS RECEIVED ALL DETECTORS, ETC. SHALL BE AUTOMATICALLY RESET AND DAMPERS SHALL OPEN TO THEIR RESPECTIVE POSITIONS. AFTER A VARIABLE TIME DELAY AIR HANDLING UNIT FAN/S AND INTERLOCKED FANS SHALL START. COORDINATE THE WORK FURNISHED AND INSTALLED UNDER THE ELECTRICAL SECTION OF THE SPECIFICATIONS WITH WORK FURNISHED AND INSTALLED UNDER THE MECHANICAL SECTION OF THE SPECIFICATIONS.

(D) ALL CONTROL VALVES SHALL BE TWO (2) WAY UNLESS OTHERWISE INDICATED.

### AHU-3A & 3B

WHEN THE SYSTEM IS IN OPERATION AS HERE-IN-BEFORE INDICATED THE FOLLOWING SEQUENCE SHALL OCCUR, THE AIR HANDLING UNIT SHALL OPERATE CONTINUOUSLY SUBJECT TO THE HAND SWITCHES. THE AIR HANDLING UNIT FAN SHALL OPERATE THRU FIRE ALARM SYSTEM CONTACTS. OUTSIDE AIR SHALL BE MEASURED AND SET AT DESIGN AIR FLOWS AND THE RETURN DAMPER AND OUTSIDE AIR DAMPER SHALL PROVIDE A CONSTANT OUTDOOR AIR FLOW. THE CHILLED WATER CONTROL VALVE V-1 AND V-2 SHALL BE MODULATED BY A DISCHARGE AIR SENSOR/CONTROLLER TO MAINTAIN THE SET POINT. DIFFERENTIAL PRESSURE SENSORS SHALL MONITOR THE PRESSURE DROP ACROSS ALL FILTERS WHEN PRESSURE DROP RISES ABOVE SETPOINT (1.0 IN. W.G. ADJ. FOR 80% & 90% FILTERS & .50 IN. W.G ADJ. FOR 25% FILTERS) ALARM SHALL OCCUR AND RED PILOT LIGHT LABELED "FILTER No. __ DIRTY, ROOM __" SHALL BE ENERGIZED. PILOT LIGHTS SHALL BE LOCATED NEXT TO AHU CONTROL PANEL. EACH FILTER SHALL HAVE ITS OWN PILOT LIGHT AND IDENTIFYING MARK ON LABEL.

### TERMINAL UNIT CONTROL:

#### GENERAL

THE TERMINAL UNIT CONTROLS SHALL BE FACTORY INSTALLED AND SHALL BE COMPATABLE WITH THE DDC SYSTEM FURNISHED. ALL TERMINAL UNITS SERVED BY ONE AIR HANDLING UNIT SHALL BE CONNECTED BACK TO THE AIR HANDLING UNIT DCP. THE UNIT SHALL BE CAPABLE OF MAINTAINING THE AIR FLOWS AS INDICATED ON THE TERMINAL UNIT SCHEDULE. ALL TERMINAL UNITS SHALL BE INTERFACED WITH THE DDC CONTROL SYSTEM CENTRAL PROCESSOR SO THAT SPACE TEMPERATURES AND AIR FLOWS MAY BE READ AND RESET FROM THE CENTRAL UNIT PROCESSOR. EACH TERMINAL UNIT THERMOSTAT SHALL HAVE THE CAPABILITY TO START THE ENTIRE DDC CONTROL SYSTEM.

#### CAV (CONSTANT AIR VOLUME) W/ REHEAT

A SPACE TEMPERATURE SENSOR SHALL MODULATE THE REHEAT COIL CONTROL VALVE FROM THE MAXIMUM TO THE MINIMUM HOT WATER FLOW TO MAINTAIN SET POINT.

### CHILLED WATER PUMP CP-1 AND CHILLER CH-1 (CP-2 & CH-2 SAME)

THE CONTROL SYSTEM IS ENERGIZED THROUGH A HAND-OFF-AUTO SWITCH LOCATED ON THE CONTROL PANEL. WHEN WATER FLOW IS PROVEN THRU A FLOW SWITCH LOCATED ON THE CHILLED WATER DISCHARGE FROM THE CHILLER, THE CHILLER CONTROL CIRCUIT SHALL BE ENERGIZED AND THE CHILLER SHALL OPERATE THROUGH ITS OWN SAFETY AND OPERATING CONTROLS TO MAINTAIN DISCHARGE WATER TEMPERATURE SETPOINT.

### HOT WATER PUMP HWP-1 AND BOILER B-1

THE CONTROL SYSTEM IS ENERGIZED THROUGH A HAND-OFF-AUTO SWITCH LOCATED ON THE CONTROL PANEL. WHEN WATER FLOW IS PROVEN THRU A FLOW SWITCH LOCATED ON THE BOILER WATER DISCHARGE, THE BOILER CONTROL CIRCUIT SHALL BE ENERGIZED AND THE BOILER SHALL OPERATE THROUGH ITS OWN SAFETY AND OPERATING CONTROLS TO MAINTAIN DISCHARGE WATER TEMPERATURE SETPOINT.

### EXHAUST FANS

EXHAUST FANS SHALL BE INTERLOCKED TO OPERATE ONLY WHEN AIR HANDLING SYSTEM IT SERVES IS OPERATING. ANY INTERLOCKED DAMPERS SHALL OPEN WHEN FAN STARTS AND CLOSE WHEN FAN STOPS.

P:\95-113\ME\113M0901.dwg, (48|96), 02/29/96 at 09:58:29 by JOINER_J

SHERLOCK, SMITH & ADAMS, INC.
ARCHITECTS - ENGINEERS
MONTGOMERY, ALABAMA

U.S. NAVAL STATION ROOSEVELT ROADS, P.R.
REPAIRS TO NAVAL HOSPITAL
MECHANICAL CONTROLS

CONSTR. CONTR. NO. | SPECIFICATION NO. | NAVFAC DRWG. NO. | TF NO. | SHEET ? OF ??

PLATE NO. **M9-1**

PWC #

DEPARTMENT OF THE NAVY
NAVAL FACILITIES ENGINEERING COMMAND
NAVY PUBLIC WORKS CENTER, JACKSONVILLE, FL
U.S. NAVAL STATION ROOSEVELT ROADS, P.R.
REPAIRS TO NAVAL HOSPITAL
MECHANICAL CONTROLS

DESIGN BY: DUFFEE DRAWN BY: JOINER
CHK BY: YOUNG APPROVED:

ENG. DIV. DIR. | DATE: | SATISFACTORY TO: | DATE:

REVISION DESCRIPTION | DATE

PWC DWG. NO. | NAVFAC DWG. NO.

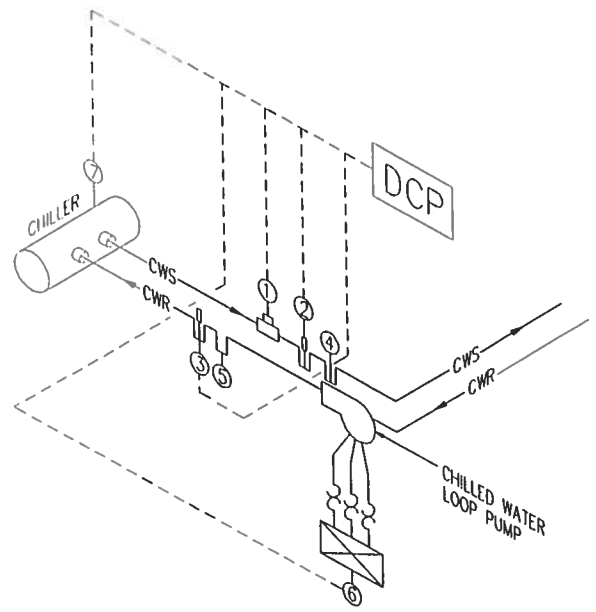


## CHILLED WATER CHILLER AND PUMP CONTROL DIAGRAM

SCALE: 1/8"=1'-0"

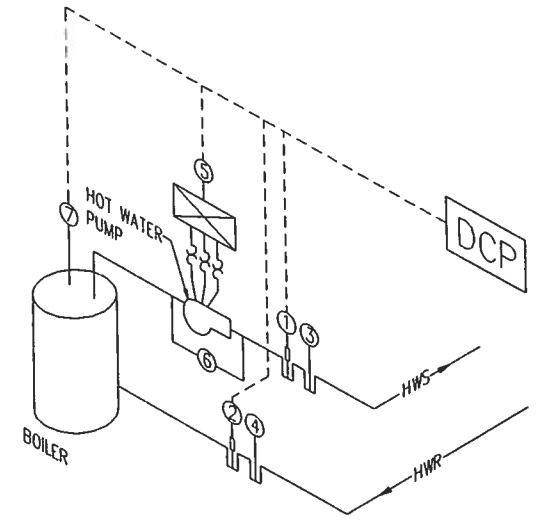


## HOT WATER HEATING BOILER AND PUMP CONTROL DIAGRAM

SCALE: 1/8"=1'-0"

| POINT MUNBER | POINT DESCRIPTION | TYPE |
|---|---|---|
| | | |
| | | |
| 1 | CHILLED WATER FLOW SWITCH | DO |
| 2 | CHILLED WATER SUPPLY TEMPERATURE | AI |
| 3 | CHILLED WATER RETURN TEMPERATURE | AI |
| 4 | SPARE CHILLED WATER SUPPLY WELL | – |
| 5 | SPARE CHILLED WATER SUPPLY WELL | – |
| 6 | CHILLER WATER LOOP PUMP START/STOP | DO |
| 7 | CHILLER CONTROL PANEL | AI |
| | | |
| | | |
| | | |

| POINT MUNBER | POINT DESCRIPTION | TYPE |
|---|---|---|
| | | |
| | | |
| 1 | HOT WATER SUPPLY TEMPERATURE | AI |
| 2 | HOT WATER RETURN TEMPERATURE | AI |
| 3 | SPARE HOT WATER SUPPLY WELL | – |
| 4 | SPARE HOT WATER RETURN WELL | – |
| 5 | HOT WATER BOILER PUMP START/STOP | DO |
| 6 | DIFFERENTIAL PRESSURE | DI |
| 7 | BOILER CONTROL PANEL | AI |
| | | |
| | | |

P:\95-113\ME\113M0902.dwg, (48|96), 02/29/96 at 10:05:35 by JOINER_J

SHERLOCK, SMITH & ADAMS, INC.
ARCHITECTS – ENGINEERS
MONTGOMERY, ALABAMA

U.S. NAVAL STATION RODSEVELT ROADS, P.R.
REPAIRS TO NAVAL HOSPITAL
MECHANICAL CONTROLS

CONSTR. CONTR. NO. | SPECIFICATION NO. | NAVFAC DRWG. NO. | TF NO | SHEET ? OF ??

SEAL AREA

ENG. OW. OR: ____ DATE: ____ SATISFACTORY TO: ____ DATE: ____

DESIGN BY: DUFFEE DRAWN BY: JOINER
CHK. BY: YOUNG APPROVED:

| DATE | REVISION DESCRIPTION |
|---|---|

NAVAL FACILITIES ENGINEERING COMMAND
DEPARTMENT OF THE NAVY
NAVY PUBLIC WORKS CENTER, JACKSONVILLE, FL
U.S. NAVAL STATION ROOSEVELT ROADS, P.R.
REPAIRS TO NAVAL HOSPITAL
MECHANICAL CONTROLS

CONSTR. CONTR. NO. | NAVFAC DWG. NO. | PWC DWG. NO.

PLATE NO
M9-2

PWC #

# ELECTRICAL LEGEND

## SYMBOLS & ABBREVIATIONS:

| | |
|---|---|
| AFF | MOUNTING HEIGHT ABOVE FINISHED FLOOR OR GRADE TO CENTERLINE. |
| CL | CEILING MOUNTED |
| CW | DEVICE MOUNTS IN CASEWORK BUT NOT FURNISHED WITH CASEWORK. |
| •D | AFTER FIXTURE MARK INDICATES FIXTURE TO BE PROVIDED WITH DIMMING BALLAST AND 30W OR 40W LAMPS AS REQUIRED. |
| ER | EXISTING EQUIPMENT TO REMAIN, DEMOLISH EXISTING CIRCUIT ONLY AND RECONNECT AS SHOWN ON NEW WORK (EP2-1 TO EP2-10). |
| GFI | GROUND FAULT CIRCUIT INTERRUPTER. |
| HG | HOSPITAL GRADE RECEPTACLE |
| REC | RECEPTACLE(S) |
| TV | TELEVISION |
| TX | TRANSFORMER |
| WP | RAINTIGHT (NEMA 3R CLASSIFICATION). |

## SWITCHES:

| | |
|---|---|
| S | FLUSH TYPE, 20A, 120/277V AC ONLY, QUIET TYPE, 1-POLE |
| $S_2$ | FLUSH TYPE, 20A, 120/277V AC ONLY, QUIET TYPE, 3 WAY |
| $S_3$ | FLUSH TYPE, 20A, 120/277V AC ONLY, QUIET TYPE, 3 WAY |
| $S_4$ | FLUSH TYPE, 20A, 120/277V AC ONLY, QUIET TYPE, 4 WAY |
| $S_a$ | CONTROLS OUTLET "a" ETC. |
| $S_P$ | WITH RED PILOT LIGHT, "ON" WHEN SWITCH IS "ON". ENGRAVE PLATE TO CLEARLY INDICATE EQUIPMENT CONTROLLED (AND LOCATION IF NOT OBVIOUS). |
| $S_{P3}$ | SAME AS $S_P$ EXCEPT 3 WAY |
| $S_D$ | SOLID STATE DIMMER, INCANDESCENT OR FLUORESCENT AS REQUIRED FOR LIGHTS PROVIDED. WATTAGE TO BE MINIMUM OF 125% OF TOTAL FIXTURE WATTAGE CONTROLLED OR AS INDICATED ON DRAWING. |

## ESSENTIAL ELECTRICAL SYSTEM DESIGNATIONS:

- L — LIFE SAFETY BRANCH
- C — CRITICAL BRANCH
- O — EQUIPMENT BRANCH
- NORMAL SYSTEM

## BRANCH CIRCUITS:

- CONCEALED IN OR BELOW FLOORS.
- EXPOSED CONDUIT.
- FLEXIBLE CONDUIT TO EQUIPMENT
- CONCEALED OVERHEAD OR IN WALLS.

NOTE: CIRCUITS SHOWN L2A: 3 INDICATES 1 #12 PHASE CONDUCTOR, 1 #12 NEUTRAL & 1 #12 GND - 1/2" C. TO 20 AMP, 1 POLE BREAKER ON CIRCUIT No. 3, IN PANEL "L2A".
L2A: 2,4 INDICATES 2 # 12 PHASE CONDUCTORS, 1 #10 NEUTRAL & 1 #12 GND - 1/2 C. TO 20 AMP, 1 POLE BREAKER ON CIRCUIT No.'s 2 & 4 IN PANEL "L2A".
L2A: 2,4,6 INDICATES 3 #12 PHASE CONDUCTORS, 1 #10 NEUTRAL & 1 #12 GND - 3/4" C, TO 20 AMP 1 POLE BREAKERS ON CIRCUIT No.'S 2,4,6, IN PANEL "L2A" ETC. PER NEC OR AS INDICATED. 10's INDICATES ALL CONDUCTORS ARE TO BE MINIMUM #10 GAUGE. CONDUIT PER NEC OR AS INDICATED. 3-30A/2P INDICATES CONNECTED TO THREE(3) 30 AMP 2 POLE BREAKERS ("2-4DA/1P" INDICATES TWO 40 AMP, 1 POLE BREAKERS, ETC.) ON LIGHTING PLANS A #12 NEUTRAL MAY BE UTILIZED RATHER THAN A #10 NEUTRAL. TO 20 AMP 1 POLE BREAKERS ON CIRCUIT No.'S 2,4,6, IN PANEL "L2A" ETC.

## POWER, PANELS & POWER EQUIPMENT

- PANELBOARD - SURFACE MOUNTED - SEE PANELBOARD SCHEDULE
- PANELBOARD - RECESSED - SEE PANELBOARD SCHEDULE
- DISTRIBUTION PANELBOARD OR SWITCHBOARD - SEE PANEL SCHEDULE
- DISCONNECT SWITCH, NON-FUSIBLE, SIZE AND TYPE AS NOTED OR AS SHOWN ON SCHEDULE ON PLATE
- DISCONNECT SWITCH, FUSIBLE, SIZE, TYPE AND FUSED AS NOTED, FUSE PER MANUFACTURER'S RECOMMENDATION. NON-FUSED SWITCH MAY BE USED IF UNIT IS UL TESTED WITH BREAKER PROTECTION. SIZE, TYPE AND FUSES AS NOTED OR AS SHOWN ON SCHEDULE ON PLATE.

## POWER, PANELS & POWER EQUIPMENT (CONTINUED)

- MOLDED CASE CIRCUIT BREAKER
- M — MAGNETIC TRIP ONLY CIRCUIT BREAKER
- MOLDED CASE CIRCUIT BREAKER WITH SOLID STATE TRIP
- DRAWOUT AIR CIRCUIT BREAKER
- T — TRANSFORMER - DRY TYPE - RATING AS SHOWN. TRANSFORMERS ARE FLOOR MOUNTED UNLESS NOTED OTHERWISE.
- B — CIRCUIT BREAKER IN NEMA 1 ENCLOSURE - SURFACE MOUNTED
- $B_F$ — CIRCUIT BREAKER IN NEMA 1 ENCLOSURE - FLUSH MOUNTED.

## MISCELLANEOUS EQUIPMENT:

- C — ELECTRIC CLOCK, TYPE AS SHOWN
- J, E — ELAPSED TIME CLOCK AND CONTROLLER
- BRACKET TYPE FIXTURE
- EXIT LIGHT

## GROUNDING

- GROUND ROD(S).
- G — GROUND HOMERUN 1#12, 1/2"C.

## CEILING OUTLETS:

- FS1, a, b — SURFACE MOUNTED FIXTURE, SHOWN FIXTURE MARK "FS1", CIRCUIT No. 8, CONTROLLED BY SWITCH "b" TYPICAL. WHERE 2 SUBSCRIPT LETTERS ARE SHOWN BY FIXTURE SUCH AS "a" & "b" THE INBOARD LAMPS SHALL BE CONTROLLED BY SWITCH "a" AND THE OUTBOARD LAMPS BY SWITCH "b".
- LIGHTING FIXTURE - MOUNTING AND TYPE AS SHOWN IN FIXTURE SCHEDULE.
- EXIT LIGHT - NUMBER AND DIRECTION OF FACES AS SHOWN BY COLORED IN SECTION. SHOWN SINGLE FACE. PROVIDE ARROWS AS INDICATED ON ELECTRICAL PLANS OR FIRE PROTECTION PLANS.
- LIGHTING FIXTURE ON EMERGENCY POWER (OR WITH BATTERY PACK)
- LIGHTING FIXTURE ON EMERGENCY POWER AND WITH BATTERY PACK.

## WALL RECEPTACLES:

- SINGLE RECEPTACLE - 20A, MTD. 18" AFF UNLESS OTHERWISE NOTED.
- DUPLEX RECEPTACLE, HG, 20A, 125V., 2P-3 WIRE, MOUNT 1'-6" AFF, UNLESS NOTED OTHERWISE NEMA 5-20R.
- DUPLEX RECEPTACLE, HG, 20A, 125V, 2P-3 WIRE, MOUNT BOTTOM OF RECEPTACLE COVER PLATE 2" ABOVE COUNTER OR BACKSPLASH. IF NO COUNTER THEN MOUNT 3'-8" AFF, NEMA 5-20R.
- DOUBLE DUPLEX RECEPTACLE, HG, 20A, 125V, 2P-3 WIRE, MOUNT BOTTOM OF RECEPTACLE COVER PLATE 2" ABOVE COUNTER OR BACKSPLASH. IF NO COUNTER THEN MOUNT 3'-8" AFF, NEMA 5-20R.
- 5-30R — SPECIAL RECEPTACLE - NEMA CONFIGURATION AS SHOWN ON FLOOR PLANS OR IN EQUIPMENT SCHEDULE - SHOWN NEMA 5-30R.
- GFI — DUPLEX RECEPTACLE, HG, 20A, 125V, 2P-3 WIRE, WITH GROUND FAULT INTERRUPTING.
- CW — DUPLEX RECEPTACLE, HG, MOUNTED IN CASEWORK
- TV — DUPLEX RECEPTACLE, HG, MOUNTED IN CEILING

## JUNCTION BOXES:

- J — IN OR ABOVE CEILING
- J — IN WALL - MOUNT 1'-6" UNLESS NOTED OTHERWISE.
- J — WITH FLEXIBLE CONNECTION TO EQUIPMENT
- J WP — CAST BOX WITH WEATHERPROOF COVER

## CONTROLS & MECHANICAL EQUIPMENT:

- MOTOR CONTROLLER - MAGNETIC - MOUNTS IN MOTOR CONTROL CENTER
- MOTOR CONTROLLER - MAGNETIC - MOUNTS IN SEPARATE ENCLOSURE FURNISHED BY MECHANICAL, INSTALLED BY ELECTRICAL - COORDINATE LOCATION WITH MECHANICAL. REPLACEMENT STARTERS FOR CONVERSION TO 480 VOLT FURNISHED BY ELECTRICAL.
- M — COMBINATION VARIABLE SPEED MOTOR CONTROLLER AND DISCONNECT
- $S_M$ — MOTOR SNAP SWITCH WITH THERMAL OVERLOAD PROTECTION. 20A, 1 POLE UNLESS NOTED OTHERWISE.
- M — MOTOR - ELECTRICAL CHARACTERISTICS AS NOTED.
- COMBINATION STARTER - MOUNTS IN SEPERATE ENCLOSURE - MAGNETIC STARTER, OVERLOAD RELAY, NON-FUSED DISCONNECT. 50VA CONTROL TRANSFORMER, 1A/1B CONTACTS.

## COMMUNICATIONS SYSTEM:

CEILING OUTLETS

- SMOKE DETECTOR
- S — PAGING SYSTEM, CEILING SPEAKER
- NURSE CALL SYSTEM DOME LIGHT.

SEE SHEET EP6-1 FOR POWER SINGLE LINE DIAGRAM LEGEND.

SHERLOCK, SMITH & ADAMS, INC.
ARCHITECTS - ENGINEERS
MONTGOMERY, ALABAMA

U.S. NAVAL STATION ROOSEVELT ROADS, P.R.
REPAIRS TO NAVAL HOSPITAL

CONSTR. CONTR. NO. | SPECIFICATION NO. | NAVFAC DRWG. NO. | TF NO | SHEET ? OF ??

DEPARTMENT OF THE NAVY
NAVAL FACILITIES ENGINEERING COMMAND
NAVY PUBLIC WORKS CENTER, JACKSONVILLE, FL
ROOSEVELT ROADS, P.R.

ENG. DIV. DIR.: | DATE | SATISFACTORY TO:

| REVISION DESCRIPTION | DATE |
|---|---|

PLATE NO. E

PWC #

## GENERAL NOTES

1. FOR SITE WORK LEGEND SEE SHEET ES1-1, FOR COMMUNICATIONS COMMUNICATIONS LEGEND SEE SHEET E00-1, FOR DEMOLITION LEGEND SEE SHEET E00-1.

2. PHASING SHALL BE COORDINATED AND IN COMPLIANCE WITH ALL PHASING DRAWINGS AND NOTES. COORDINATE ALL POWER OUTAGES WITH OWNER AND PROVIDE A WRITTEN NOTICE TO OWNER NOT LESS THAN 14 DAYS IN ADVANCE.

3. MOTOR CONTROL DEVICES FURNISHED IN PLACE BY MECHANICAL TRADE, BUT ELECTRICALLY CONNECTED BY ELECTRICAL TRADE.

4. FLEXIBLE CONDUIT INSTALLED OUT-OF-DOORS, IN ANY MECHANICAL EQUIPMENT ROOM, OR IN NORMALLY WET AREAS, SHALL BE LIQUID TIGHT FLEX WITH SUITABLE FITTINGS.

5. COORDINATE WITH ALL MECHANICAL TRADES FOR SPACE REQUIREMENTS IN MECHANICAL ROOMS, CORRIDORS, SHAFTS, ABOVE CEILING, ETC. THIS INCLUDES SPACE ABOVE PANELS WHERE DUCTS AND PIPING ARE PROHIBITED.

6. FOR EXACT LOCATIONS OF MECHANICAL EQUIPMENT, SEE MECHANICAL PLANS.

7. WHERE WALL SWITCHES AND CONTROL DEVICES SUCH AS THERMOSTATS ARE SHOWN NEAR EACH OTHER (CONTROL DEVICES SUCH AS THERMOSTATS ARE SHOWN ON THE MECHANICAL DRAWINGS) THEY SHALL BE MOUNTED WITH THE CONTROL DEVICE DIRECTLY BESIDE THE SWITCH.

8. THE LOCATION OF FIXTURES IN MECH., ELEC., MACHINE ROOMS, ETC. ARE SHOWN FOR BID PURPOSES ONLY. FIXTURES SHALL BE INSTALLED SO AS TO COORDINATE WITH ALL TRADES AND SHALL BE ARRANGED FOR MAXIMUM LIGHTING DISTRIBUTION OF THE AREA.

9. PROVIDE CONDUIT EXPANSION FITTINGS WITH BONDING JUMPERS FOR ALL CONDUITS PASSING THROUGH EXPANSION JOINTS. SEE ARCHITECTURAL DRAWINGS FOR EXPANSION JOINT LOCATIONS.

10. SEE ARCHITECTURAL REFLECTED CEILING PLANS FOR EXACT LOCATION OF ALL CEILING MOUNTED EQUIPMENT.

11. ALL CEILING AND WALL MOUNTED EQUIPMENT OR DEVICES SHALL BE LOCATED TO AVOID DOOR SWINGS WHERE REQUIRED.

12. CONTRACTOR SHALL VERIFY & COORDINATE ALL MOUNTING HEIGHTS OF ALL DEVICES MOUNTED IN CASEWORK OR IN OR ABOVE COUNTERS WITH SPECIFIC EQUIPMENT FURNISHED.

13. OUTLET BOXES(RECEPTACLES, LIGHT SWITCHES, TELEPHONES, ETC.) OVER 16 SQUARE INCHES IN SMOKE AND FIRE WALLS MUST BE 5 SIDED WITH SAME CONSTRUCTION AS WALL SYSTEM. WHERE OUTLET BOXES ARE ON OPPOSITE SIDES OF A FIRE WALL THERE MUST BE A 24 INCH HORIZONTAL SEPARATION BETWEEN THEM. IF OUTLET BOXES ON PLANS ARE SHOWN AT EXISTING LOCATIONS IN FIRE WALLS BUT THERE IS LESS THAN 24 INCHES OF SEPARATION THE CONTRACTOR SHALL RELOCATE ONE OR BOTH OUTLETS TO ACHIEVE THE MINIMUM 24 INCHES OF SEPARATION REQUIRED.

14. DO NOT MOUNT OUTLETS BACK TO BACK. THEY MUST BE IN SEPARATE STUD SPACES.

15. CONDUIT TO PASS THROUGH WALLS AT 90 DEGREES AND TO BE RUN PARALLEL OR PERPENDICULAR TO WALLS.

16. BRANCH CIRCUITS AND HOMERUNS SHALL BE # 12 WIRE AND 1/2"CONDUIT MINIMUM. EVERY CONDUIT SHALL HAVE A GROUND WIRE (#12 MINIMUM).

17. NO MORE THAN 3 PHASE CONDUCTORS MAY BE INSTALLED IN ONE CONDUIT UNLESS NOTED OTHERWISE.

18. ALL NORMAL RECEPTACLES, SWITCHES, ETC. TO BE IVORY WITH STAINLESS STEEL PLATES UNLESS NOTED OTHERWISE. ALL RECEPTACLES AND LIGHT SWITCHES ON EMERGENCY POWER SHALL BE RED. ENGRAVE EMERGENCY PLATES WITH "EMERGENCY", FILLED WITH RED LETTERS. IN CRITICAL CARE AREAS ALSO ENGRAVE EMERGENCY PLATES WITH CIRCUIT NUMBER.

19. PROVIDE BARRIERS BETWEEN ALL 277V SWITCHES MOUNTED UNDER THE SAME COVER PLATE WITH OTHER 277V SWITCHES ON DIFFERENT PHASES OR 120V SWITCHES.

20. MOUNTING HEIGHTS OF WALL OUTLETS ABOVE FINISHED FLOOR SHALL BE AS INDICATED IN THE LEGEND AND IN THE FOLLOWING TABLE UNLESS NOTED OTHERWISE ON THE PLANS (MOUNTING HEIGHTS ARE TO CENTERLINE OF DEVICE):

| | |
|---|---|
| SWITCHES (GENERAL) | 4'- 0" |
| RECEPTACLES (GENERAL) | 1'- 6" |
| BATH BRACKETS | 7'- 0" |
| STAIR BRACKETS (ABOVE LANDING) | 7'- 0" |
| TELEPHONE OUTLETS | 1'- 6" |

FOR SPECIAL MOUNTING HEIGHTS OF DEVICES IN O.R., DELIVERY, NURSES STATIONS, ETC., SEE ARCHITECTURAL ELEVATIONS.

21. MAINTAIN N.E.C. MINIMUM CLEARANCE IN FRONT OF ALL SAFETY SWITCHES, PANELBOARDS, TRANSFER SWITCHES, TRANSFORMERS, AND OTHER ELECTRICAL EQUIPMENT.

22. PRIOR TO ANY ROUGH-IN CONTRACTOR TO PROVIDE SCALED DRAWINGS (WITH ACTUAL DIMENSIONS OF APPROVED EQUIPMENT) SHOWING LOCATIONS AND PROPER CLEARANCES OF ALL ELECTRICAL PANELS, TRANSFORMERS, COMMUNICATION CABINETS, AUTOMATIC TRANSFER SWITCHES, ENGINE GENERATOR SETS, EXHAUST PIPING, DAY TANKS, ETC. FOR APPROVAL. DRAWINGS WILL SHOW MECHANICAL, PLUMBING AND ARCHITECTURAL AS WELL AS ELECTRICAL EQUIPMENT. PROVIDE SCALED PLAN VIEW AND ELEVATION OF COMPLETE GENERATOR EXHAUST SYSTEM FOR APPROVAL.

23. PRIOR TO ROUGH-IN CONTRACTOR TO PROVIDE SCALED WALL ELEVATIONS WHERE ALL ALARM, SIGNAL CABINETS, ETC ARE INSTALLED IN OTHER THAN MECHANICAL & ELECTRICAL CLOSETS FOR APPROVAL.

24. NO CONDUIT SHALL PASS THROUGH ELEVATOR HOISTWAY OR ELEVATOR MACHINE ROOM UNLESS IT SPECIFICALLY SERVES EQUIPMENT IN THAT ROOM.

25. ALL UNDERGROUND CONDUIT RUNS ENTERING THE BUILDING SHALL BE SEALED TO PREVENT THE ENTRANCE OF MOISTURE AND GASES.

26. UNLESS NOTED OTHERWISE ALL MOTORS 1/2 HP AND LARGER SHALL BE 460V, 3 PHASE AND MOTORS SMALLER THAN 1/2 HP SHALL BE 120V, 1 PHASE.

27. CONDUIT FOR RECEPTACLE CIRCUITS SHALL BE RUN OVERHEAD UNLESS NOTED OTHERWISE.

28. PROVIDE CONDUIT FOR OUTLET BOXES AS REQUIRED FOR THERMOSTATS. THERMOSTATS ARE SHOWN ON MECHANICAL DRAWINGS.

29. CONTRACTOR SHALL VERIFY AND COORDINATE ALL CONNECTIONS TO EQUIPMENT WITH SPECIFIC EQUIPMENT FURNISHED.

30. IN EXISTING BUILDING ALL CONDUIT SHALL BE CONCEALED UNLESS NOTED OTHERWISE.

31. ANY ITEM ABOVE CEILINGS IN EXISTING CORRIDORS OR ROOMS WHICH NEEDS TO BE RELOCATED FOR INSTALLATION OF NEW EQUIPMENT SHALL BE RELOCATED AND RECONNECTED AS REQUIRED. THIS INCLUDES CONDUIT, WIRE, PIPING, DUCTWORK,ETC.

32. ALL ITEMS ON PLANS ARE NEW UNLESS NOTED OTHERWISE.

33. WHERE SWITCHING OF LIGHTS IN A AREA IS NOT CONTAINED COMPLETELY WITHIN A SINGLE PHASE OF WORK PROVIDE TEMPORARY SWITCHING WHICH ACCOMPLISHES THE SAME FUNCTION. COORDINATE TEMPORARY SWITCHING LOCATION WITH CONTRACTING OFFICER. TEMPORARY SWITCHING MAY BE SURFACE MOUNTED RACEWAY.

34. IN MANY AREAS CIRCUITS WILL CROSS PHASING BOUNDARIES WITH PART OF THE CIRCUIT IN ONE PHASE, AND THE REST OF THE CIRCUIT IN ANOTHER PHASE. IT SHALL BE THE CONTRACTOR'S RESPONSIBILITY TO COORDINATE HIS WORK, CONDUIT RUNS, ETC., SUCH THAT THE CIRCUITS ARE CONNECTED PROPERLY AND AT THE PROPER TIME.

35. SWING SPACES. ALL CIRCUIT BREAKERS DEDICATED TO SWING SPACES SHALL REMAIN AFTER SWING SPACE HAS BEEN CONVERTED TO PERMANENT FUNCTION. ALL SWING SPACE RECEPTACLES SHALL BE TURNED OVER TO GOVERNMENT AFTER SWING SPACE HAS BEEN CONVERTED TO PERMANENT FUNCTION. ALL CONDUIT, WIRE, BOXES, ETC., REMOVED AFTER SWING SPACE HAS BEEN CONVERTED TO PERMANENT FUNCTION SHALL BE REMOVED FROM SITE. FINAL TYPED PANEL DIRECTORIES SHALL SHOW MOST UP-TO-DATE SCHEDULE FOR THE PERMANENT FUNCTION. ABANDONED SWING SPACE BREAKERS SHALL BE SHOWN AS SPARES.

36. EXISTING PANELS TO REMAIN SHALL HAVE THEIR PANEL SCHEDULES UPDATED AND RETYPED AFTER COMPLETION OF WORK.

37. CONTRACTOR SHALL PROVIDE 1500 FT OF 2-#12, 1-#12 GND., 3/4"C OR THE EQUIVALENT THEREOF FOR MISCELLANEOUS CIRCUITS AS DIRECTED BY THE CONTRACTOR OFFICER. CONTRACTOR SHALL MAINTAIN A LOG OF MATERIAL USED.

38. SHEETS E01-1 THROUGH E01-3 SHOW THE LOCATIONS OF EXISTING PANELS AND NEW ELECTRICAL CLOSETS AND THE AREAS THEY SERVE. THESE SHEETS ALSO INDICATE THE GENERAL ROUTING PATH FOR NEW FEEDERS. EXACT ROUTING OF FEEDERS IS TO BE DETERMINED BY THE CONTRACTOR IN THE FIELD AND CHANGES TO ROUTING SHALL BE AT NO ADDITIONAL COST TO THE GOVERNMENT. ADHERE TO ALL PHASING PLANS. ROUTING OF CIRCUITS FROM MOTOR CONTROL CENTERS ARE THE RESPONSIBILITY OF THE CONTRACTOR AND SHOULD BE CONSIDERED WHEN PROVIDING FEEDER CIRCUITS. THESE SHEETS ARE FOR INFORMATION PURPOSES ONLY.

39. CONTRACTOR SHALL IDENTIFY ANY NEW AND EXISTING ELECTRICAL DEVICE THAT IS MOUNTED ABOVE THE CEILING AND REQUIRES MAINTENANCE BY PLACING A COLORED DOT OR TACK AT THE LOCATION. COORDINATE WITH OTHER TRADES SUCH THAT ALL TRADES USE THE SAME METHOD EXCEPT DIFFERENT COLORS FOR EACH SYSTEM IN EACH TRADE.

40. ALL NEW CIRCUITS TO WALL MOUNTED RECEPTACLES AND JUNCTION BOXES MUST BE FED FROM OVERHEAD. IN MOST CASES THIS WILL REQUIRE CHASING AND PATCHING THE EXISTING WALLS AT EACH DEVICE LOCATION.

41. ALL ELECTRICAL ITEMS PROVIDED OR EXISTING TO REMAIN SHALL BE PROPERLY BRACED FOR SEISMIC ZONE 3.

42. IT IS STRONGLY RECOMMENDED THE CONTRACTOR VISIT THE SITE PRIOR TO BIDDING TO ASCERTAIN EXISTING CONDITIONS AS HE WILL BE RESPONSIBLE FOR EXISTING CONDITIONS AS REQUIRED IN OTHER NOTES.

43. ALL RECEPTACLES BESIDES SINKS SHALL BE LOCATED AT LEAST 6" HORIZONTALLY FROM THE TOWEL DISPENSER. UNDER NO CONDITION SHALL A RECEPTACLE BE LOCATED UNDER A TOWEL DISPENSER.

## GENERAL DEMOLITION NOTES

1. ALL ITEMS SHOWN ON DEMOLITION PLANS ARE TO BE REMOVED UNLESS NOTED OTHERWISE. REMOVE ALL ELECTRICAL ITEMS ASSOCIATED WITH ITEMS SHOWN TO BE REMOVED ON DEMOLITION PLANS. THIS SHALL INCLUDE BUT NOT BE LIMITED TO CONDUIT, WIRE, DEVICES AND CONDUIT SUPPORTS.

2. THE FOLLOWING REMOVED ELECTRICAL EQUIPMENT SHALL REMAIN THE PROPERTY OF THE GOVERNMENT AND SHALL BE TURNED OVER TO THE OWNER AT A LOCATION DESIGNATED BY THE GOVERNMENT ON THE SITE OF THE PROJECT: INDOOR DRY TYPE TRANSFORMERS, 800KW EMERGENCY GENERATOR, AND 1200A TRANSFER SWITCH WITH BYPASS OPTION. CARE SHALL BE TAKEN NOT TO DAMAGE REMOVED EQUIPMENT. THE REMOVED EQUIPMENT MUST BE STACKED NEATLY INSIDE OR OUTSIDE THE DESIGNATED STORAGE AREA AS DIRECTED BY THE ROICC. EQUIPMENT NOT DESIRED BY THE GOVERNMENT SHALL BE DISPOSED OF OFF SITE BY THE CONTRACTOR AT NO ADDITIONAL COST. WIRE AND CONDUIT CONDUIT SHALL BECOME THE PROPERTY OF THE CONTRACTOR AND SHALL BE DISPOSED OF OFF SITE.

3. ALL EXISTING FIXTURES THAT ARE TO REMAIN OR BE REUSED SHALL BE THOROUGHLY CLEANED BY THE CONTRACTOR. CONTRACTOR SHALL ALSO REPLACE ALL BURNED OUT LAMPS. RECEPTACLES TO REMAIN SHALL BE REPLACED WITH HOSPITAL GRADE RECEPTACLES. REPLACE ALL EXISTING LIGHT SWITCHES SHOWN AS EXISTING TO REMAIN.

4. ABANDONED CONDUIT SHALL BE REMOVED WHERE POSSIBLE ABANDONED CONDUIT WHICH CAN NOT BE REMOVED SHALL HAVE WIRES PULLED FROM THEM AND PLUGGED.

5. WHERE EXISTING CONDUITS ARE REUSED THE OLD WIRES SHALL BE REMOVED, THE CONDUIT SWABBED OUT, AND NEW WIRES REPULLED.

6. IF ANY EXISTING ELECTRICAL EQUIPMENT THAT IS TO REMAIN IN OPERATION BECOMES ISOLATED BECAUSE OF PHASING OR BY THE REMOVAL OF WALLS, CEILINGS, ELECTRICAL EQUIPMENT, ETC., IT SHALL BE THE CONTRACTOR'S RESPONSIBILITY TO REROUTE AND/OR RECONNECT THE EQUIPMENT SO THAT THE SYSTEM REMAINS OPERABLE AS SOON AS POSSIBLE. THIS SHALL ALSO APPLY TO SWITCHING OF LIGHTS AS NEEDED TO KEEP THE FACILITY FUNCTIONAL.

7. ANY MOTORS, HVA/C DEVICES OR OTHER EQUIPMENT WHICH IS TO BE REMOVED SHALL ALSO HAVE ELECTRICAL CONNECTION REMOVED.

8. IT SHALL BE THE ELECTRICAL CONTRACTOR'S RESPONSIBILITY TO RELOCATE AND RECONNECT EXISTING ELECTRICAL CIRCUITS AS REQUIRED TO AVOID NEW CONSTRUCTION.

9. FOR ANY CUTTING OR PATCHING OF WALLS AND CEILING REQUIRED, THIS CONTRACTOR SHALL BE RESPONSIBLE FOR SAME, HOWEVER WORK SHALL BE PERFORMED BY CRAFTSMAN SKILLED IN THAT TRADE.

10. ANY ITEMS ABOVE CEILING IN EXISTING CORRIDORS OR ROOMS WHICH NEEDS TO BE RELOCATED FOR INSTALLATION OF NEW ELECTRICAL EQUIPMENT SHALL BE RELOCATED AND RECONNECTED AS REQUIRED. THIS INCLUDES BUT IS NOT LIMITED TO CONDUIT, WIRE, PIPING, AND DUCTWORK.

11. ANY ELECTRICAL ITEM ABOVE EXISTING CEILING WHICH NEEDS TO BE RELOCATED OR SUPPORTED TO REMAIN IN SERVICE DUE TO DEMOLITION OF EXISTING CEILING SHALL BE RELOCATED AND RECONNECTED AS REQUIRED. ELECTRICAL ITEMS SUCH AS EXISTING COMMUNICATIONS CABLE LAYING ON EXISTING CEILING SHALL BE INDEPENDENTLY SUPPORTED WHILE THE EXISTING CEILINGS ARE BEING DEMOLISHED AND REPLACED. SUPPORT SHALL KEEP COMMUNICATION CABLES AND OTHER ITEMS 12" ABOVE CEILING TO ALLOW FOR PROPER SPACE TO INSTALL NEW CEILINGS. THIS INCLUDES BUT IS NOT LIMITED TO CONDUIT, AND WIRE FOR LIGHTING, POWER, NURSE CALL, FIRE ALARM, PAGING, COMPUTER SYSTEMS, SECURITY, AND HVA/C CONTROLS.

12. BEFORE DEMOLISHING ANY CONDUIT OR WIRE THE CONTRACTOR SHALL VERIFY WHAT IT SERVES TO ENSURE SERVICE IS NOT LOST TO ITEMS OUTSIDE OF THE AREA SCHEDULED IN THE PHASING PLAN.

13. WHERE EXISTING ELECTRICAL PANELS IN WALLS OR CEILINGS ARE NOT REUSED THEY SHALL BE REMOVED AND THE WALL OR CEILING PATCHED. BLANKING PLATES WILL NOT BE ACCEPTABLE.

14. EXISTING CONDUITS WHICH PENETRATE EXTERIOR WALLS SHALL BE REMOVED AND EXTERIOR WALL PATCHED, OR CONDUIT SHALL BE SEALED ON INTERIOR OF BUILDING TO PREVENT WATER FROM ENTERING BUILDING.

15. FOR DEMOLITION POWER FLOOR PLANS SEE SHEETS ED2-1 THROUGH ED2-10. FOR DEMOLITION POWER SINGLE LINE DIAGRAM SEE SHEET EP6-4 AND EP6-5.

16. CONTRACTOR SHALL BE RESPONSIBLE FOR REMOVAL OF PCB BALLAST AND FLUORESCENT LAMPS FROM ALL LIGHTING FIXTURES. SEE SPECIFICATION SECTION _____ FOR DETAILS. BALLAST SHALL BE DELIVERED TO A STORAGE FACILITY ON BASE AS DIRECTED BY THE GOVERNMENTS REPRESENTATIVE.

SHERLOCK, SMITH & ADAMS, INC.
ARCHITECTS – ENGINEERS
MONTGOMERY, ALABAMA

U.S. NAVAL STATION ROOSEVELT ROADS, P.R.
REPAIRS TO NAVAL HOSPITAL

CONSTR. CONTR. NO. | SPECIFICATION NO. | NAVFAC DRWG. NO. | TF NO. | SHEET ? OF ??

DEPARTMENT OF THE NAVY
NAVAL FACILITIES ENGINEERING COMMAND
NAVY PUBLIC WORKS CENTER, JACKSONVILLE, FL

REVISION DESCRIPTION | DATE | ENG. OV. DR. | DATE

PLATE NO. E

PWC

11/9/91

# FEEDER SCHEDULE (ALL CONDUCTORS ARE TO BE COPPER)

| FEEDER SIZE INDICATOR | NOMINAL AMPACITY (FEEDER) | SYMBOL "⬡" DRY & WET LOCATIONS CONDUCTORS | RACEWAY | SYMBOL "⬡NN" (NO NEUTRAL) DRY & WET LOCATIONS (NO NEUTRAL) CONDUCTORS | RACEWAY | SYMBOL "⬡2N" (OVERSIZED NEUTRAL) DRY LOCATIONS (OVERSIZED NEUTRAL) CONDUCTORS | RACEWAY | SYMBOL "⬡2N" (OVERSIZED NEUTRAL) WET LOCATIONS (OVERSIZED NEUTRAL) CONDUCTORS | RACEWAY | NOMINAL AMPACITY (FEEDER) | FEEDER SIZE INDICATOR |
|---|---|---|---|---|---|---|---|---|---|---|---|
| 1 | 20 | 4 #12 & 1 #12 (GND.) | 3/4" | 3 #12 & 1 #12 (GND.) | 3/4" | 3 #12, 1 #10 NEUTRAL & 1 #12(GND) | 3/4" | 3 #12, 1 #8 NEUTRAL & 1 #12(GND) | 3/4" | 20 | 1 |
| 2 | 30 | 4 #10 & 1 #10 (GND.) | 3/4" | 3 #10 & 1 #10 (GND.) | 3/4" | 3 #10, 1 #6 NEUTRAL & 1 #10(GND) | 1" | 3 #8, 1 #4 NEUTRAL & 1 #10(GND) | 1" | 30 | 2 |
| 3 | 40 | 4 #8 & 1 #10 (GND.) | 1" | 3 #8 & 1 #10 (GND.) | 1" | 3 #8, 1 #4 NEUTRAL & 1 #10(GND) | 1" | 3 #6 1 #3 NEUTRAL & 1 #10(GND) | 1 1/4" | 40 | 3 |
| 4 | 50 | 4 #6 & 1 #10 (GND.) | 1 1/4" | 3 #6 & 1 #10 (GND.) | 1" | 3 #6, 1 #3 NEUTRAL & 1 #10(GND) | 1 1/4" | 3 #4, 1 #1 NEUTRAL & 1 #10(GND) | 1 1/4" | 50 | 4 |
| 5 | 60 | 4 #6 & 1 #10 (GND.) | 1 1/4" | 3 #6 & 1 #10 (GND.) | 1" | 3 #6, 1 #2 NEUTRAL & 1 #10(GND) | 1 1/4" | 3 #4, 1 #1/0 NEUTRAL & 1 #10(GND) | 1 1/4" | 60 | 5 |
| 6 | 70 | 4 #4 & 1 #8 (GND.) | 1 1/4" | 3 #4 & 1 #8 (GND.) | 1 1/4" | 3 #4, 1 #1 NEUTRAL & 1 #8(GND) | 1 1/4" | 3 #3, 1 #1/0 NEUTRAL & 1 #8(GND) | 1 1/2" | 70 | 6 |
| 7 | 80 | 4 #3 & 1 #8 (GND.) | 1 1/2" | 3 #3 & 1 #8 (GND.) | 1 1/4" | 3 #3, 1 #1/0 NEUTRAL & 1 #8(GND) | 1 1/2" | 3 #2, 1 #2/0 NEUTRAL & 1 #8(GND) | 1 1/2" | 80 | 7 |
| 8 | 90 | 4 #3 & 1 #8 (GND.) | 1 1/2" | 3 #3 & 1 #8 (GND.) | 1 1/4" | 3 #3, 1 #2/0 NEUTRAL & 1 #8(GND) | 1 1/2" | 3 #1, 1 #3/0 NEUTRAL & 1 #8(GND) | 2" | 90 | 8 |
| 9 | 100 | 4 #2 & 1 #8 (GND.) | 1 1/2" | 3 #2 & 1 #8 (GND.) | 1 1/4" | 3 #2, 1 #3/0 NEUTRAL & 1 #8(GND) | 2" | 3 #1/0, 1 #4/0 NEUTRAL & 1 #8(GND) | 2" | 100 | 9 |
| 10 | 125 | 4 #1 & 1 #6 (GND.) | 2" | 3 #1 & 1 #6 (GND.) | 1 1/2" | 3 #1, 1 #4/0 NEUTRAL & 1 #6(GND) | 2" | 3 #1/0, 2 #1/0 NEUTRAL & 1 #6(GND) | 2" | 125 | 10 |
| 11 | 150 | 4 #1/0 & 1 #6 (GND.) | 2" | 3 #1/0 & 1 #6 (GND.) | 2" | 3 #2/0, 1 #300 KCMIL NEUTRAL & 1 #6(GND) | 2 1/2" | 3 #2/0, 2 #1/0 NEUTRAL & 1 #6(GND) | 2 1/2" | 150 | 11 |
| 12 | 175 | 4 #2/0 & 1 #6 (GND.) | 2" | 3 #2/0 & 1 #6 (GND.) | 2" | 3 #3/0, 1 #400 KCMIL NEUTRAL & 1 #6(GND) | 2 1/2" | 3 #4/0, 2 #3/0 NEUTRAL & 1 #6(GND) | 3" | 175 | 12 |
| 13 | 200 | 4 #3/0 & 1 #6 (GND.) | 2 1/2" | 3 #3/0 & 1 #6 (GND.) | 2" | 3 #4/0, 2 #3/0 NEUTRALS & 1 #6(GND) | 3" | 3-250 KCMIL, 2 #4/0 NEUTRALS & 1 #6 (GND) | 3" | 200 | 13 |
| 14 | 225 | 4 #4/0 & 1 #4 (GND.) | 2 1/2" | 3 #4/0 & 1 #4 (GND.) | 2 1/2" | 3-250 KCMIL, 2 #4/0 NEUTRALS & 1 #4 (GND) | 3" | 3-300 KCMIL, 2 #250 KCMIL NEUTRALS & 1 #4(GND) | 3" | 225 | 14 |
| 15 | 250 | 4-250 KCMIL & 1 #4 (GND.) | 3" | 3-250 KCMIL & 1 #4 (GND.) | 2 1/2" | 3-300 KCMIL, 2 #4/0 NEUTRALS, & 1 #4 (GND) | 3" | 3-350 KCMIL, 2-300 KCMIL NEUTRALS & 1 #4(GND) | 3 1/2" | 250 | 15 |
| 16 | 300 | 4-350 KCMIL & 1 #4 (GND.) | 3" | 3-350 KCMIL & 1 #4 (GND.) | 3" | 3-400 KCMIL, 2-300 KCMIL NEUTRALS & 1 #4(GND) | 3 1/2" | 3-500 KCMIL, 2-400 KCMIL NEUTRALS & 1 #4(GND) | 4" | 300 | 16 |
| 17 | 350 | 4-400 KCMIL & 1 #3 (GND.) | 3 1/2" | 3-400 KCMIL & 1 #3 (GND.) | 3" | 3-500 KCMIL, 2-400 KCMIL NEUTRALS & 1 #3(GND) | 4" | 2 PARALLEL CIRCUITS EACH 3 #4/0, 2-3/0 NEUTRALS & 1 #3(GND) | 2-3" | 350 | 17 |
| 18 | 400 | 4-500 KCMIL & 1 #3 (GND.) | 3 1/2" | 3-500 KCMIL & 1 #3 (GND.) | 3 1/2" | 2 PARALLEL CIRCUITS EACH 3 #4/0, 2#3/0 NEUTRALS & 1 #3(GND) | 2-3" | 2 PARALLEL CIRCUITS EACH 3-250 KCMIL, 2 #4/0 NEUTRALS & 1 #3(GND) | 2-3" | 400 | 18 |
| 19 | 500 | 2 PARALLEL CIRCUITS EACH 4-250 KCMIL & 1 #2 (GND.) | 2-3" | 2 PARALLEL CIRCUITS EACH 3-250 KCMIL & 1 #2 (GND.) | 2-2 1/2" | 2 PARALLEL CIRCUITS EACH 3-300 KCMIL, 2 #4/0 NEUTRALS & 1 #2(GND) | 2-3" | 2 PARALLEL CIRCUITS EACH 3-350 KCMIL, 2-300 KCMIL NEUTRALS & 1 #2(GND) | 2-3 1/2" | 500 | 19 |
| 20 | 600 | 2 PARALLEL CIRCUITS EACH 4-350 KCMIL & 1 #1/0 (GND.) | 2-3" | 2 PARALLEL CIRCUITS EACH 3-350 KCMIL & 1 #1/0 (GND.) | 2-3" | 2 PARALLEL CIRCUITS EACH 3-400 KCMIL, 2-300 KCMIL NEUTRALS & 1 #1/0(GND) | 2-3 1/2" | 2 PARALLEL CIRCUITS EACH 3-500 KCMIL, 2-400 KCMIL NEUTRALS & 1 #1/0(GND) | 2-4" | 600 | 20 |
| 21 | 800 | 3 PARALLEL CIRCUITS EACH 4-300 KCMIL & 1 # 1/0 (GND.) | 3-3" | 3 PARALLEL CIRCUITS EACH 3-300 KCMIL & 1 # 1/0 (GND.) | 3-3" | 3 PARALLEL CIRCUITS EACH 3-350 KCMIL, 2-250 KCMIL NEUTRALS & 1 #1/0(GND) | 3-3 1/2" | 3 PARALLEL CIRCUITS EACH 3-400 KCMIL, 2-350 KCMIL NEUTRALS & 1 #1/0(GND) | 3-3 1/2" | 800 | 21 |
| 22 | 1000 | 3 PARALLEL CIRCUITS EACH 4-400 KCMIL & 1 #3/0 (GND.) | 3-3 1/2" | 3 PARALLEL CIRCUITS EACH 3-400 KCMIL & 1 #3/0 (GND.) | 3-3" | 3 PARALLEL CIRCUITS EACH 3-500 KCMIL, 2-400 KCMIL NEUTRALS & 1 #3/0(GND) | 3-4" | 4 PARALLEL CIRCUITS EACH 3-400 KCMIL, 2-300 KCMIL NEUTRALS & 1 #3/0(GND) | 4-3 1/2" | 1000 | 22 |
| 23 | 1200 | 4 PARALLEL CIRCUITS EACH 4-350 KCMIL & 1 #3/0 (GND.) | 4-3" | 4 PARALLEL CIRCUITS EACH 3-350 KCMIL & 1 #3/0 (GND.) | 4-3" | 4 PARALLEL CIRCUITS EACH 3-400 KCMIL, 2-350 KCMIL NEUTRALS & 1 #3/0(GND) | 4-3 1/2" | 4 PARALLEL CIRCUITS EACH 3-500 KCMIL, 2-400 KCMIL NEUTRALS & 1 #3/0(GND) | 4-4" | 1200 | 23 |
| 24 | 1400 | 4 PARALLEL CIRCUITS EACH 4-400 KCMIL & 1 #4/0 (GND.) | 4-3 1/2" | 4 PARALLEL CIRCUITS EACH 3-400 KCMIL & 1 #4/0 (GND.) | 4-3" | 5 PARALLEL CIRCUITS EACH 3-350 KCMIL, 2-300 KCMIL NEUTRALS & 1 #4/0(GND) | 5-3 1/2" | 5 PARALLEL CIRCUITS EACH 3-500 KCMIL, 2-350 KCMIL NEUTRALS & 1 #4/0(GND) | 5-4" | 1400 | 24 |
| 25 | 1600 | 5 PARALLEL CIRCUITS EACH 4-400 KCMIL & 1 #4/0 (GND.) | 5-3 1/2" | 5 PARALLEL CIRCUITS EACH 3-400 KCMIL & 1 #4/0 (GND.) | 5-3" | 5 PARALLEL CIRCUITS EACH 3-500 KCMIL, 2-350 KCMIL NEUTRALS & 1 #4/0(GND) | 5-4" | 6 PARALLEL CIRCUITS EACH 3-400 KCMIL, 2-500 KCMIL NEUTRALS & 1 #4/0(GND) | 6-4" | 1600 | 25 |
| 26 | 2000 | 6 PARALLEL CIRCUITS EACH 4-400 KCMIL & 1 #250 KCMIL (GND.) | 6-3 1/2" | 6 PARALLEL CIRCUITS EACH 3-400 KCMIL & 1 #250 KCMIL (GND.) | 6-3" | 6 PARALLEL CIRCUITS EACH 3-500 KCMIL, 2-400 KCMIL NEUTRALS & 1-250 KCMIL (GND) | 6-4" | 6 PARALLEL CIRCUITS EACH 3-400 KCMIL, 2-350 KCMIL NEUTRALS & 1-250 KCMIL (GND) | 6-3 1/2" | 2000 | 26 |

## SCHEDULE

### THREE PHASE: DRY-TYPE TRANSFORMERS

| TRANSFORMER RATING KVA | PRIMARY VOLTS | SECONDARY VOLTS | TAPS % FCAN | TAPS % FCBN | PRI. AMPS | PRI.-BKR. IN 480V. PANEL | SEC. AMPS | SEC.-BKR. IN 208Y/120V. PNL. | PRIMARY FEEDER | SECONDARY FEEDER NORMAL XFMR | SECONDARY FEEDER "K" RATED XFMR | GROUNDING ELECTRODE CONDUCTOR - NOTE 1 |
|---|---|---|---|---|---|---|---|---|---|---|---|---|
| 6 | 480 | 208Y/120 | - | 2-5 | 7.2 | 15A - 3P | 16.7 | 25A - 3P | 1NN | 2 | 2 2N | 1 #8 GND-3/4"C. |
| 9 | | | 2-2 1/2 | 2-2 1/2 | 10.8 | 15A - 3P | 25.0 | 35A - 3P | 1NN | 3 | 3 2N | 1 #8 GND-3/4"C. |
| 15 | | | 2-2 1/2 | 2-2 1/2 | 18 | 30A - 3P | 42 | 50A - 3P | 2NN | 4 | 4 2N | 1 #8 GND-3/4"C. |
| 30 | | | 2-2 1/2 | 4-2 1/2 | 36 | 50A - 3P | 83 | 100A - 3P | 4NN | 9 | 9 2N | 1 #8 GND-3/4"C. |
| 45 | | | 2-2 1/2 | 4-2 1/2 | 54 | 70A - 3P | 125 | 175A - 3P | 6NN | 12 | 12 2N | 1 #4 GND-3/4"C. |
| 75 | | | 2-2 1/2 | 4-2 1/2 | 90 | 125A - 3P | 208 | 250A - 3P | 10NN | 15 | 15 2N | 1 #2 GND-3/4"C. |
| 112.5 | | | 2-2 1/2 | 4-2 1/2 | 135 | 175A - 3P | 312 | 400A - 3P | 12NN | 18 | 18 2N | 1 #1/0 GND-3/4"C. |
| 150 | | | 2-2 1/2 | 4-2 1/2 | 180 | 225A - 3P | 417 | 500A - 3P | 14NN | 19 | 19 2N | 1 #1/0 GND-3/4"C. |
| 225 | | | 2-2 1/2 | 4-2 1/2 | 271 | 350A - 3P | 625 | 800A - 3P | 17NN | 21 | 21 2N | 1 #2/0 GND-3/4"C. |
| 300 | | | 2-2 1/2 | 4-2 1/2 | 361 | 450A - 3P | 833 | 1000A - 3P | 19NN | 22 | 22 2N | 1 #3/0 GND-3/4"C. |

NOTE 1: CONNECT TRANSFORMER NEUTRAL TO COLD WATER PIPE AND TO BUILDING STEEL WITH GROUNDING ELECTRODE CONDUCTOR OF SIZE SHOWN. SEE SHEET

T
30 DRY TYPE TRANSFORMER:
ALL DRY TYPE TRANSFORMERS TO HAVE 480V DELTA PRIMARY AND 208Y/120V SECONDARY WITH A K-4 RATING FOR NON-LINEAR LOADS UNLESS NOTED OTHERWISE.

### EXAMPLES OF HOW TO USE SCHEDULE ABOVE WITH SINGLE LINE DIAGRAM

| FROM | TO | BREAKER SIZE | FEEDER SYMBOL | CONDUCTORS | REMARKS |
|---|---|---|---|---|---|
| DES-M2 | TS-QA | 1000 | 22 | 3 PARALLEL CIRCUITS EACH 4-450 KCMIL & 1 #3/0 GND. | OVERSIZED FEEDER SHOWN ON SINGLE LINE |
| DES-M2 | TS-CC | 500 | 19 | 2 PARALLEL CIRCUITS EACH 4-250 KCMIL & 1 #2 GND. | - |
| F4N3 | TN3A | 125 | 10 2N | 3 #1, 1 #4/0 NEUTRAL & 1 #6 GND. | OVERSIZED NEUTRAL BECAUSE 480V NORMAL CIRCUIT. (SAME FOR CRITICAL BRANCH) |
| F4CC | C42C | 200 | 13 | 4 #3/0 & 1 #6 GND. | 208V BUT NO OVERSIZED NEUTRAL REQUIRED BECAUSE ON EQUIPMENT BRANCH. (SAME FOR LIFE SAFETY BRANCH) |

## FEEDER SCHEDULE NOTES:

1. CONDUCTORS AMPACITIES ARE BASED ON 60°C INSULATION FOR CONDUCTORS OF #2 GAUGE AND SMALLER AND ARE BASED ON 75°C INSULATION FOR CONDUCTORS OF #1 GAUGE AND LARGER. THIS IS TO CONFORM TO UL'S TESTING OF EQUIPMENT TERMINATIONS. CONDUCTOR SIZES SHALL NOT BE REDUCED FOR HIGHER RATED TEMPERATURE INSULATION USED.
2. CONDUIT SIZES ARE BASED ON "THW" INSULATION AND SHALL NOT BE REDUCED FOR DIFFERENT INSULATION TYPES.
3. SYMBOL "19 2N" INDICATES NEUTRAL HAS BEEN SIZED AT 1.73 TIMES THE AMPACITY OF THE PHASE CONDUCTORS TO COMPENSATE FOR HIGHER CURRENTS ON THE NEUTRAL FROM NON-LINEAR LOADS.

SETTINGS OF INSTANTANEOUS AND SHORT TIME FUNCTIONS IN SWITCHGEAR AND SWITCHBOARD CIRCUIT BREAKERS

| CIRCUIT BREAKER LOCATION | SHORT TIME DELAY BAND MAX | INT. | MIN | INSTANTANEOUS |
|---|---|---|---|---|
| SWITCHGEAR-MAIN | • | — | — | NONE |
| SWITCHGEAR-FEEDER | — | • | — | FIXED - 15X |
| SWITCHBOARD-FEEDER | — | — | • | ADJ. TO 10X |

### LEGEND

L23A PANELBOARD: SHOWN PANEL L23A

KEY TO PANEL DESIGNATIONS:
1. SERVICE:
   L-LIFE SAFETY
   C-CRITICAL
   Q-EQUIPMENT SYSTEM
   N-NORMAL
2. VOLTAGE:
   2-208Y/120VOLTS
   4-480Y/277VOLTS
3. FLOOR:
   GROUND THROUGH 3 AS NOTED.
4. PANEL AREA SERVED ON APPROPRIATE FLOOR: ALPHABETICAL, A, B, C, ETC.
   EXAMPLE: C 2 3 A

CRITICAL BRANCH
208Y/120V
THIRD FLOOR
AREA 'A' SERVED

SHERLOCK, SMITH & ADAMS, INC.
ARCHITECTS - ENGINEERS
MONTGOMERY, ALABAMA

U.S. NAVAL STATION
ROOSEVELT ROADS, P.R.
REPAIRS TO NAVAL HOSPITAL

CONSTR. CONTR. NO. | SPECIFICATION NO. | NAVFAC DRWG. NO. | TF NO. | SHEET ? OF ??

DEPARTMENT OF THE NAVY
NAVAL FACILITIES ENGINEERING COMMAND
NAVY PUBLIC WORKS CENTER, JACKSONVILLE, FL
ROOSEVELT ROADS, P.R.

PLATE NO.
E

DATE | REVISION DESCRIPTION

ENG. DIV. DIR.: 
DATE:
SATISFACTORY TO:

PWC

P:\95-113\EL\113E0003.dwg, (48|96), 02/14/96 at 10:29:41 by CAUTHEN_T

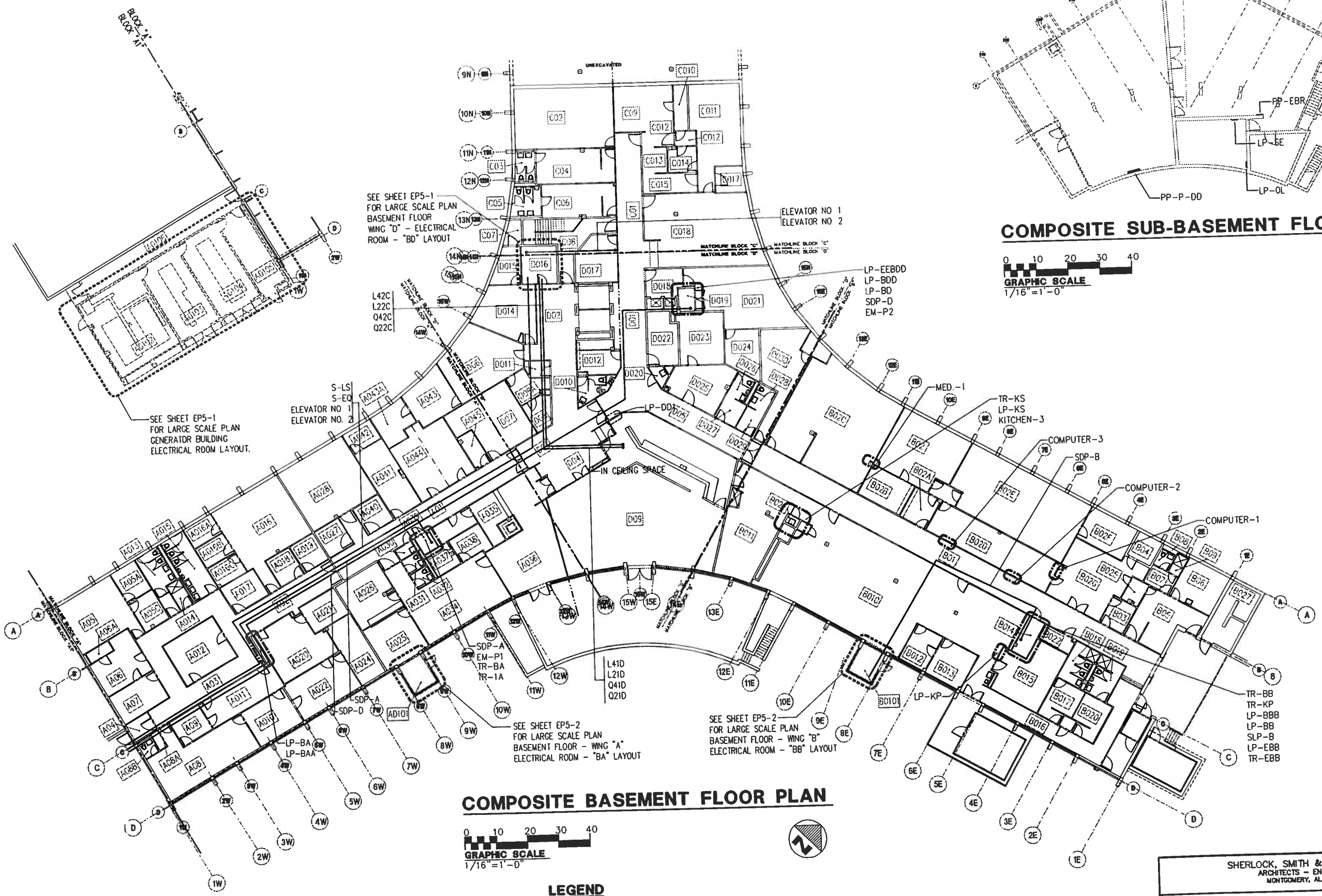


## COMPOSITE BASEMENT FLOOR PLAN

0 10 20 30 40
GRAPHIC SCALE
1/16"=1'-0"

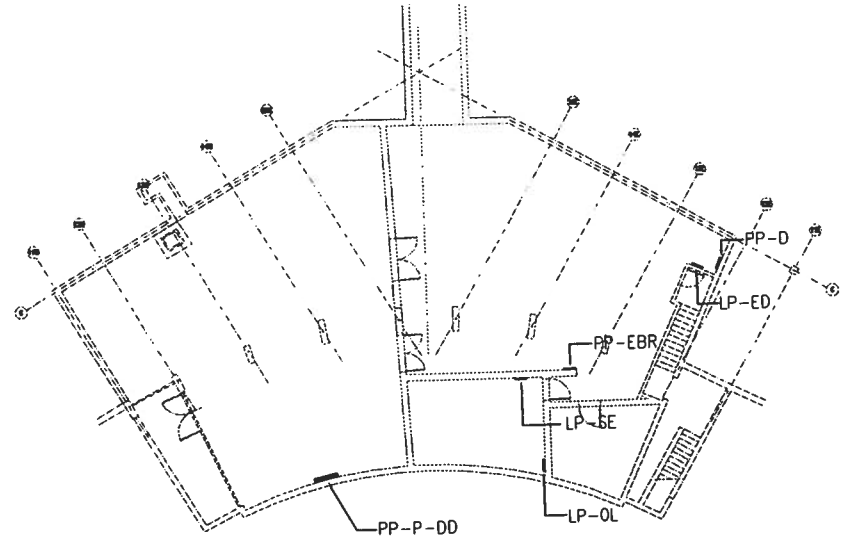


## COMPOSITE SUB-BASEMENT FLOOR PLAN

0 10 20 30 40
GRAPHIC SCALE
1/16"=1'-0"

## LEGEND

NEW ELECTRICAL ROOM ----------

EXISTING ELECTRICAL ROOM ----------

SHERLOCK, SMITH & ADAMS, INC.
ARCHITECTS - ENGINEERS
MONTGOMERY, ALABAMA

U.S. NAVAL STATION ROOSEVELT ROADS, P.R.

REPAIRS TO NAVAL HOSPITAL

COMPOSITE BASEMENT FLOOR PLAN

| CONSTR. CONTR. NO. | SPECIFICATION NO. | NAVFAC DRWG. NO. | TF NO |
|---|---|---|---|
| | | | SHEET ? OF ?? |

DEPARTMENT OF THE NAVY
NAVAL FACILITIES ENGINEERING COMMAND

NAVY PUBLIC WORKS CENTER, JACKSONVILLE, FL
ROOSEVELT ROADS, P.R.

REVISION DESCRIPTION | DATE | ENG. DIV. DR | DATE | SATISFACTORY TO

PLATE NO. E

P:\95-113\FL\113F010L.dwg (48192) 02/14/96 at 11:43:10 by CAUTHEN, T.

PWC

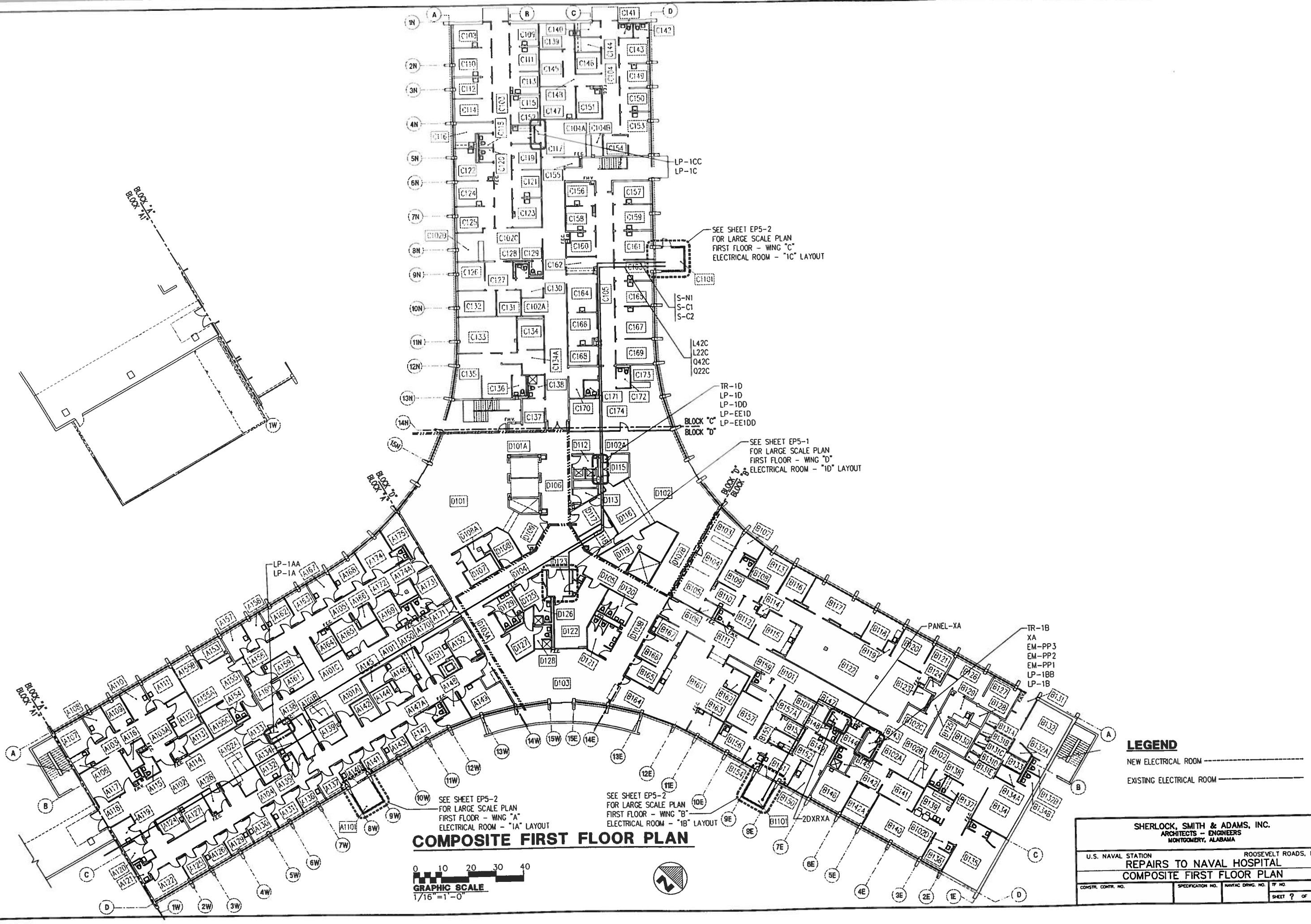
LP-1CC
LP-1C
SEE SHEET EP5-2
FOR LARGE SCALE PLAN
FIRST FLOOR - WING "C"
ELECTRICAL ROOM - "1C" LAYOUT
S-N1
S-C1
S-C2
L42C
L22C
Q42C
Q22C
TR-1D
LP-1D
LP-1DD
LP-EE1D
LP-EE1DD
BLOCK "C"
BLOCK "D"
SEE SHEET EP5-1
FOR LARGE SCALE PLAN
FIRST FLOOR - WING "D"
ELECTRICAL ROOM - "1D" LAYOUT
BLOCK "A"
BLOCK "A1"
BLOCK "D"
BLOCK "A"
LP-1AA
LP-1A
PANEL-XA
TR-1B
XA
EM-PP3
EM-PP2
EM-PP1
LP-1BB
LP-1B
2DXRXA
SEE SHEET EP5-2
FOR LARGE SCALE PLAN
FIRST FLOOR - WING "A"
ELECTRICAL ROOM - "1A" LAYOUT
SEE SHEET EP5-2
FOR LARGE SCALE PLAN
FIRST FLOOR - WING "B"
ELECTRICAL ROOM - "1B" LAYOUT
LEGEND
NEW ELECTRICAL ROOM
EXISTING ELECTRICAL ROOM
COMPOSITE FIRST FLOOR PLAN
0 10 20 30 40
GRAPHIC SCALE
1/16"=1'-0"
SHERLOCK, SMITH & ADAMS, INC.
ARCHITECTS - ENGINEERS
MONTGOMERY, ALABAMA
U.S. NAVAL STATION
ROOSEVELT ROADS, P.R.
REPAIRS TO NAVAL HOSPITAL
COMPOSITE FIRST FLOOR PLAN
CONSTR. CONTR. NO.
SPECIFICATION NO.
NAVFAC DRWG. NO.
TF NO.
SHEET ? OF ??
PLATE NO
E
NAVAL FACILITIES ENGINEERING COMMAND
DEPARTMENT OF THE NAVY
NAVY PUBLIC WORKS CENTER, JACKSONVILLE, FL
REVISION DESCRIPTION
DATE
DWG. DN. DR.
DATE
SEAL AREA
PWC

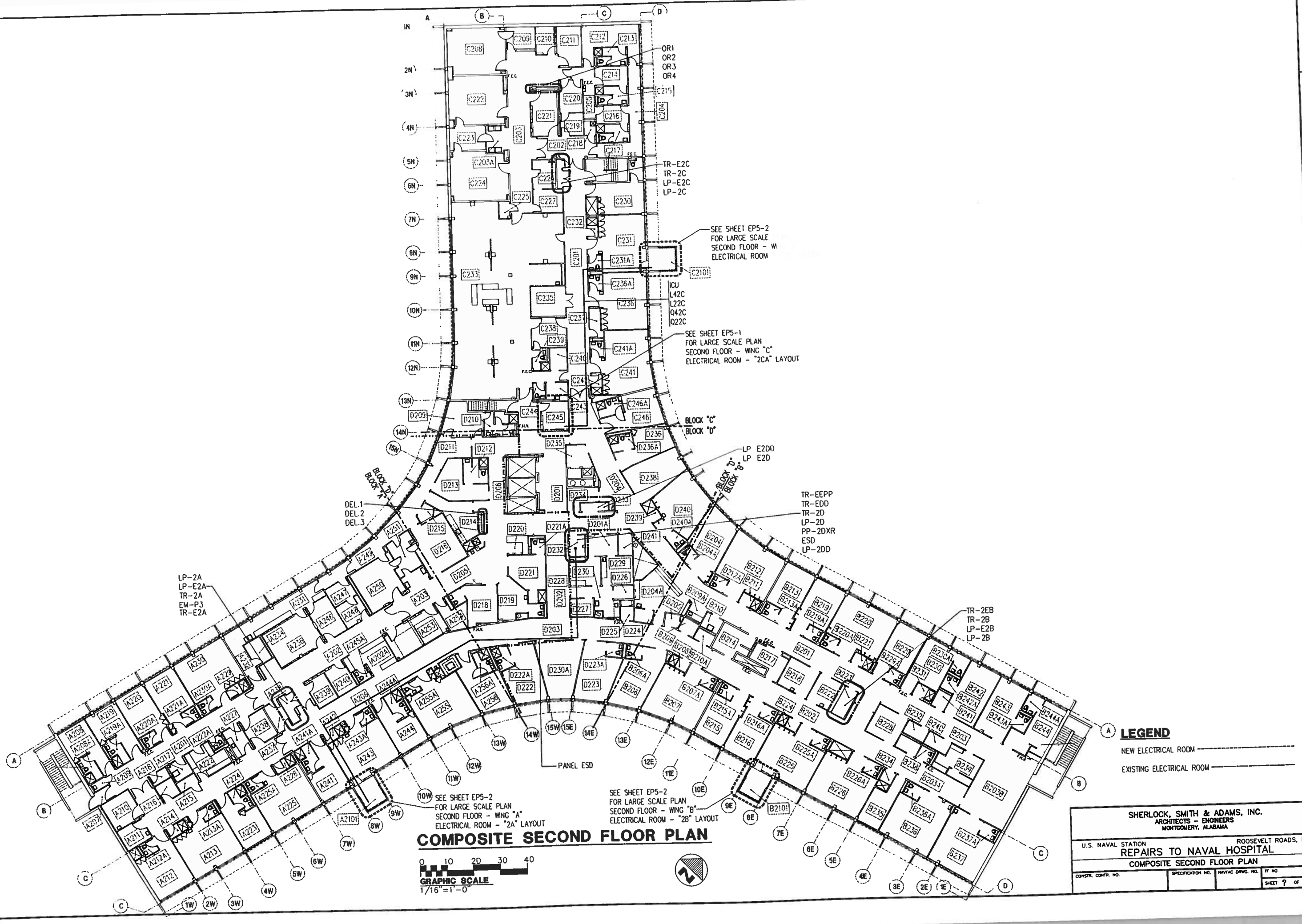
OR1
OR2
OR3
OR4
TR-E2C
TR-2C
LP-E2C
LP-2C
SEE SHEET EP5-2
FOR LARGE SCALE
SECOND FLOOR - WI
ELECTRICAL ROOM
ICU
L42C
L22C
Q42C
Q22C
SEE SHEET EP5-1
FOR LARGE SCALE PLAN
SECOND FLOOR - WING "C"
ELECTRICAL ROOM - "2CA" LAYOUT
BLOCK "C"
BLOCK "D"
LP E2DD
LP E2D
TR-EEPP
TR-EDD
TR-2D
LP-2D
PP-2DXR
ESD
LP-2DD
DEL.1
DEL.2
DEL.3
LP-2A
LP-E2A
TR-2A
EM-P3
TR-E2A
TR-2EB
TR-2B
LP-E2B
LP-2B
PANEL ESD
SEE SHEET EP5-2
FOR LARGE SCALE PLAN
SECOND FLOOR - WING "A"
ELECTRICAL ROOM - "2A" LAYOUT
SEE SHEET EP5-2
FOR LARGE SCALE PLAN
SECOND FLOOR - WING "B"
ELECTRICAL ROOM - "2B" LAYOUT
LEGEND
NEW ELECTRICAL ROOM
EXISTING ELECTRICAL ROOM
COMPOSITE SECOND FLOOR PLAN
0 10 20 30 40
GRAPHIC SCALE
1/16"=1'-0"
SHERLOCK, SMITH & ADAMS, INC.
ARCHITECTS - ENGINEERS
MONTGOMERY, ALABAMA
U.S. NAVAL STATION
ROOSEVELT ROADS, P.R.
REPAIRS TO NAVAL HOSPITAL
COMPOSITE SECOND FLOOR PLAN
CONSTR. CONTR. NO.
SPECIFICATION NO.
NAVFAC DRWG. NO.
TF NO.
SHEET ? OF ??
PLATE NO.
E
PWC
DEPARTMENT OF THE NAVY
NAVAL FACILITIES ENGINEERING COMMAND
NAVY PUBLIC WORKS CENTER, JACKSONVILLE, FL
ROOSEVELT ROADS, P.R.
REVISION DESCRIPTION
DATE
ENG. DIV. DIR.
DATE
SATISFACTORY TO