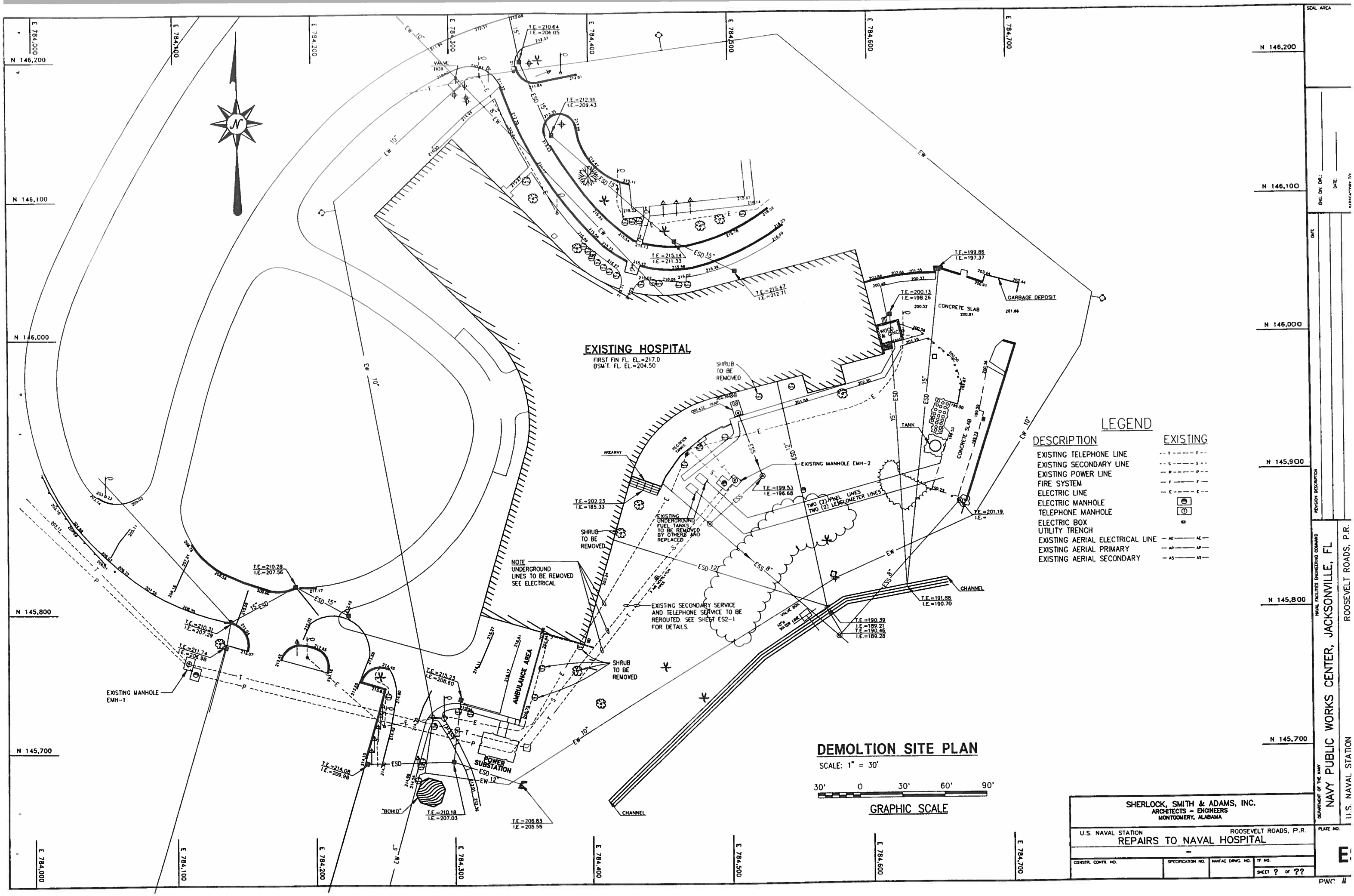

DEMOLTION SITE PLAN

SCALE: 1" = 30'

30' 0 30' 60' 90'

GRAPHIC SCALE

SHERLOCK, SMITH & ADAMS, INC.
ARCHITECTS – ENGINEERS
MONTGOMERY, ALABAMA

U.S. NAVAL STATION ROOSEVELT ROADS, P.R.

REPAIRS TO NAVAL HOSPITAL

CONSTR. CONTR. NO. | SPECIFICATION NO. | NAVFAC DRWG. NO. | TF NO. | SHEET ? OF ??

DEPARTMENT OF THE NAVY
NAVY PUBLIC WORKS CENTER, JACKSONVILLE, FL
NAVAL FACILITIES ENGINEERING COMMAND
U.S. NAVAL STATION ROOSEVELT ROADS, P.R.

REVISION DESCRIPTION | DATE | ENG. DIV. DIR. | DATE

PLATE NO. E

PWC #

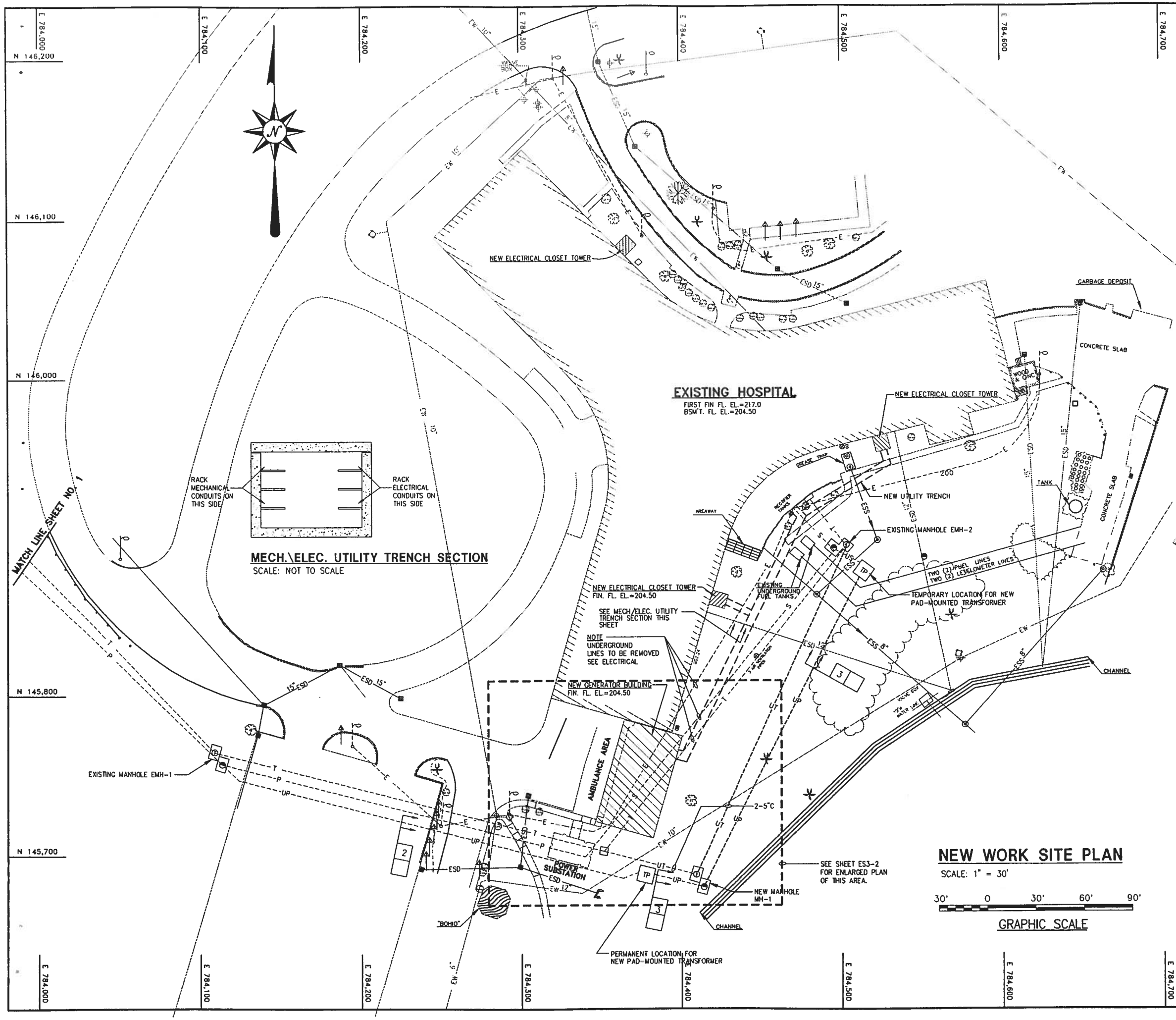

SUGGESTED SEQUENCE OF WORK

SCHEDULE OUTAGE FOR 4 HOUR PERIOD (APPROXIMATELY) ON THE WEEKEND TO BREAK THROUGH EXISTING MANHOLE WALLS AND BEGIN INITIAL POWER AND TELEPHONE DUCTBANK INSTALLATION.

INSTALL DUCTBANK AND PRIMARY CABLE FROM EXISTING MANHOLE EMH-1 ALL THE WAY TO TEMPORARY LOCATION FOR NEW PAD-MOUNTED TRANSFORMER.

INSTALL DUCTBANK FOR RELOCATION OF TELEPHONE SERVICE.

INSTALL NEW PAD-MOUNTED TRANSFORMER AT TEMPORARY LOCATION.

SCHEDULE SECOND OUTAGE FOR 12 HOUR PERIOD (APPROXIMATELY) ON THE WEEKEND TO MAKE SPLICES FOR THE REROUTING OF THE TELEPHONE SERVICE AND THE TEMPORARY POWER SERVICE.

AFTER NEW SECONDARY SERVICE IS ENERGIZED, DISCONNECT PRIMARY POWER TO EXISTING UNIT SUBSTATION IN EMH-1 AND REMOVE OLD SECONDARY SERVICE FROM EMH-2 TO EXISTING UNIT SUBSTATION.

BUILD GENERATOR BUILDING.

INSTALL NEW SECONDARY SERVICE FROM THE EXISTING UNIT SUBSTATION TO THE NEW DOUBLE-ENDED SWITCHGEAR IN NEW BUILDING ADDITION.

AFTER TRANSFER OF EXISTING FEEDER CIRCUITS, TO NEW SWITCHGEAR DE-ENERGIZE AND SWITCHBOARDS, DE-ENERGIZE SERVICE TO NEW PAD-MOUNTED TRANSFORMER AND MOVE NEW PAD-MOUNTED TRANSFORMER TO PERMANENT POSITION. (SEE SHEET ES2-1).

ALL WORK SHALL BE IN ACCORDANCE WITH PHASING PLANS AND SCHEDULE COORDINATE AS REQUIRED.

PRIMARY CABLE/DUCT BANK SCHEDULE

CABLE DESIGNATION	DESCRIPTION	DUCT SIZE	REMARK
1	3-1/C, #2 EPR INSULATION	5"	~~1 WAY~~ SEE NOTE 1
2	3-1/C, #2 EPR INSULATION	5"	~~2 WAY~~ SEE NOTE 2
3	3-1/C, #2 EPR INSULATION	5"	SEE NOTE 3

NOTES:

1. 1 WAY DUCTBANK.
2. 2 WAY DUCTBANK.
3. FOR TEMPORARY POWER.

LEGEND

DESCRIPTION

- EXISTING AERIAL TELEPHONE LINE
- EXISTING AERIAL SECONDARY LINE
- EXISTING AERIAL PRIMARY
- FIRE SYSTEM
- EXISTING AERIAL ELECTRIC LINE
- EXISTING UNDERGROUND PRIMARY
- EXISTING UNDERGROUND SECONDARY
- EXISTING UNDERGROUND TELEPHONE LINE
- NEW UNDERGROUND PRIMARY
- NEW UNDERGROUND SECONDARY
- NEW UNDERGROUND TELEPHONE LINE
- ELECTRIC MANHOLE
- TELEPHONE MANHOLE
- ELECTRIC BOX
- CLEAN OUT
- UTILITY TRENCH
- DRAWOUT CIRCUIT BREAKER
- FUSED CUTOUT
- TRANSFORMER
- NEW CONDUCTOR OR CABLE DESCRIPTION TYPICAL. DESCRIPTION PER PRIMARY CABLE/DUCTBANK SCHEDULE THIS SHEET.

SHERLOCK, SMITH & ADAMS, INC.
ARCHITECTS – ENGINEERS
MONTGOMERY, ALABAMA

U.S. NAVAL STATION ROOSEVELT ROADS, P.R.
REPAIRS TO NAVAL HOSPITAL

CONSTR. CONTR. NO. | SPECIFICATION NO. | NAVFAC DRWG. NO. | TF NO. | SHEET ? OF ??

SEAL AREA

ENG. DIV. DIR. | DATE

DATE | REVISION DESCRIPTION

DEPARTMENT OF THE NAVY
NAVAL FACILITIES ENGINEERING COMMAND
NAVY PUBLIC WORKS CENTER, JACKSONVILLE, FL
U.S. NAVAL STATION ROOSEVELT ROADS, P.R.

PLATE NO. ES

PWC #

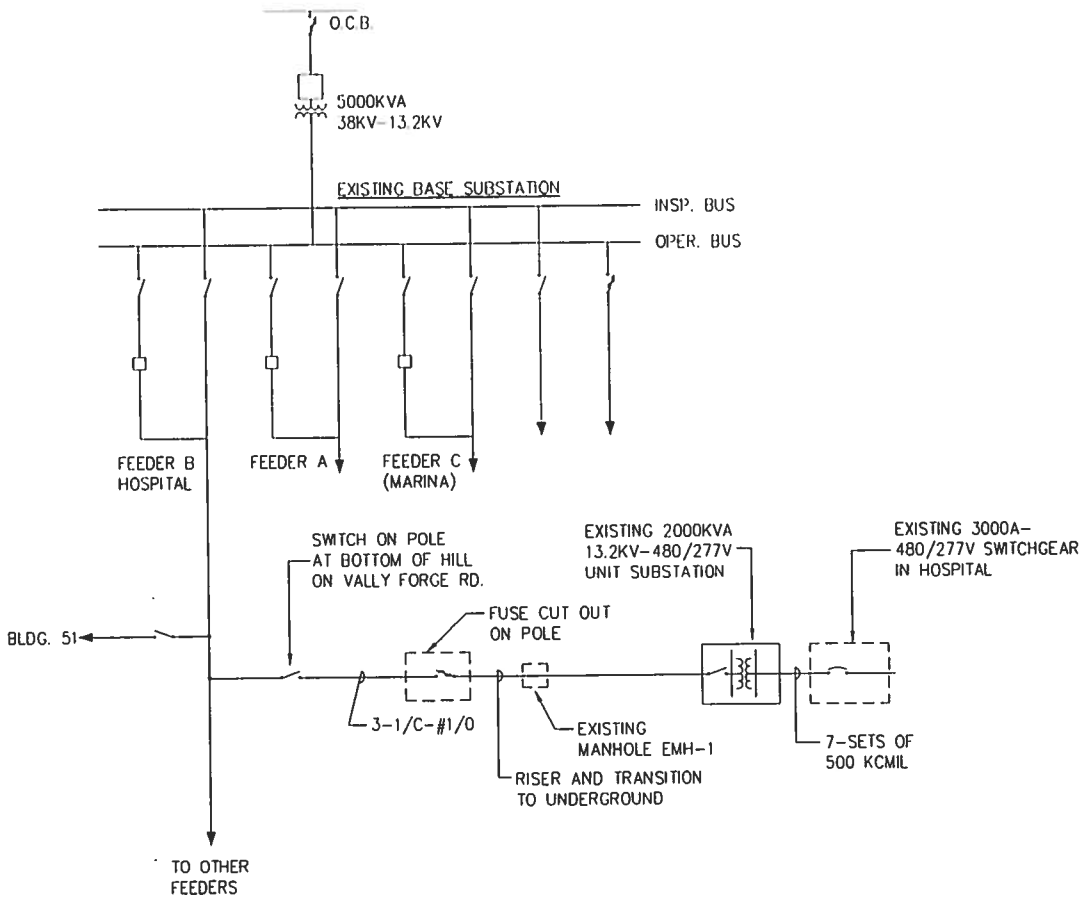

EXISTING PRIMARY SINGLE-LINE DIAGRAM

SCALE: NOT TO SCALE

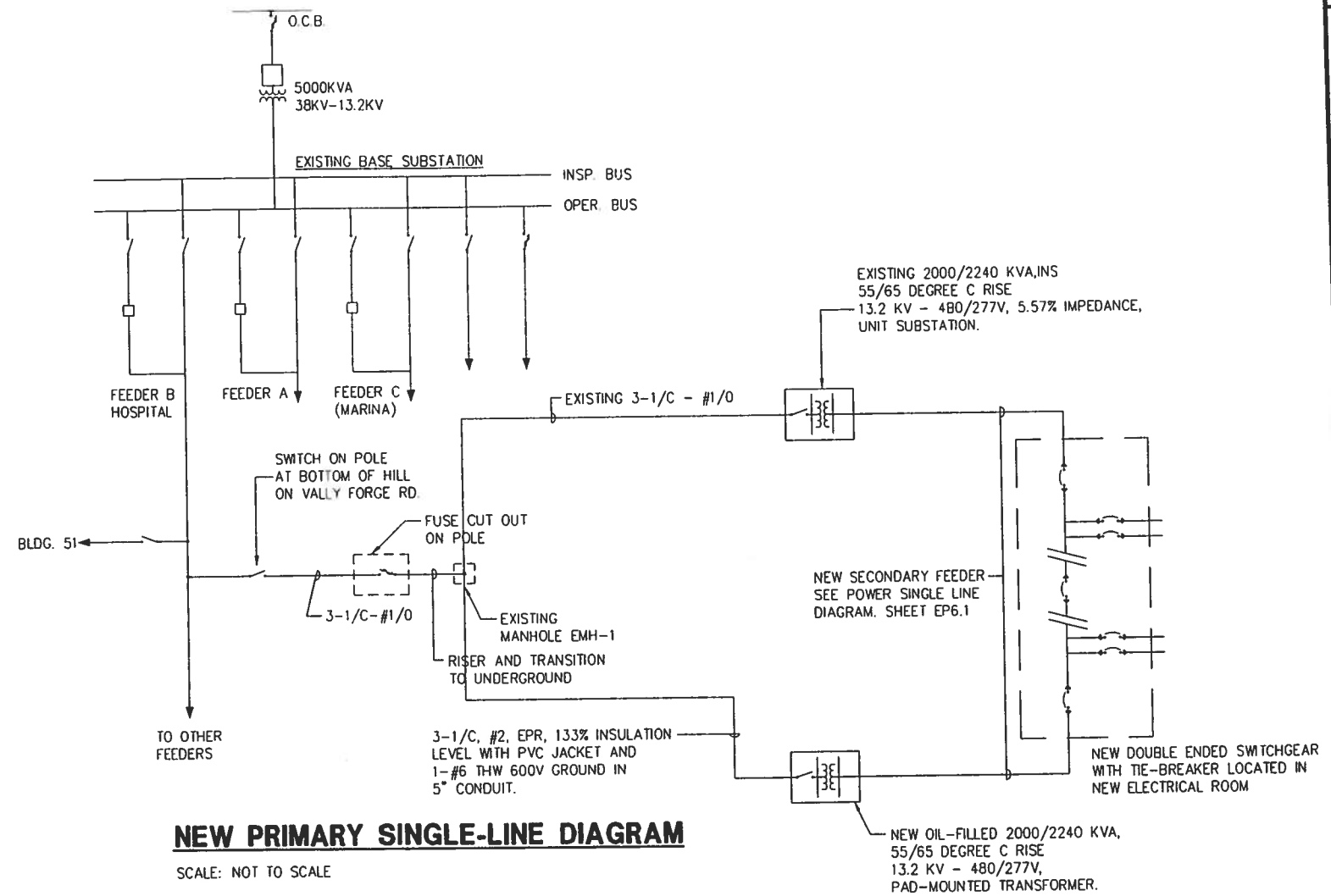

NEW PRIMARY SINGLE-LINE DIAGRAM

SCALE: NOT TO SCALE

SEAL AREA

ENG. DIV. DIR. | DATE | SATISFACTORY TO

REVISION DESCRIPTION	DATE

NAVAL FACILITIES ENGINEERING COMMAND

DEPARTMENT OF THE NAVY

NAVY PUBLIC WORKS CENTER, JACKSONVILLE, FL

U.S. NAVAL STATION ROOSEVELT ROADS, P.R.

SHERLOCK, SMITH & ADAMS, INC.
ARCHITECTS - ENGINEERS
MONTGOMERY, ALABAMA

U.S. NAVAL STATION ROOSEVELT ROADS, P.R.

REPAIRS TO NAVAL HOSPITAL

-

CONSTR. CONTR. NO.	SPECIFICATION NO.	NAVFAC DRWG. NO.	TF NO.
			SHEET ? OF ??

PLATE NO.

ES

PWC #

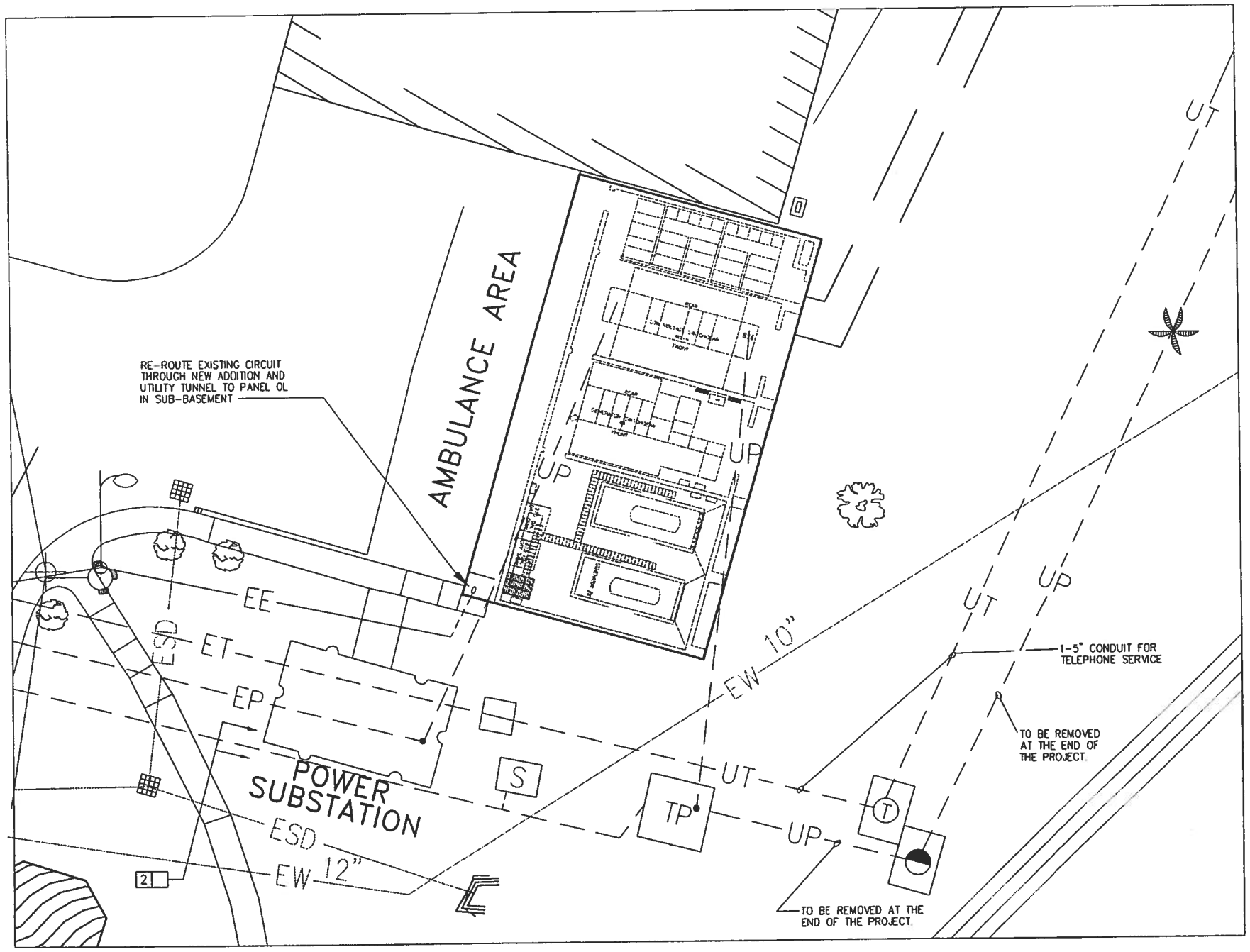

ENLARGED PLAN - UTILITY BUILDING

SCALE: 1" = 10'

SEAL AREA

ENG. OFF. DR.: _____ DATE: _____

SATISFACTORY TO: _____ DATE: _____

DATE	REVISION DESCRIPTION

NAVAL FACILITIES ENGINEERING COMMAND

DEPARTMENT OF THE NAVY

NAVY PUBLIC WORKS CENTER, JACKSONVILLE, FL

U.S. NAVAL STATION ROOSEVELT ROADS, P.R.

REPAIRS TO NAVAL HOSPITAL

ENLARGED PLAN - UTILITY BUILDING

SHERLOCK, SMITH & ADAMS, INC.
ARCHITECTS – ENGINEERS
MONTGOMERY, ALABAMA

U.S. NAVAL STATION ROOSEVELT ROADS, P.R.

REPAIRS TO NAVAL HOSPITAL

-

CONSTR. CONTR. NO.	SPECIFICATION NO.	NAVFAC DRWG. NO.	TF NO.
			SHEET ? OF ??

PLATE NO.

ES3-

PWC #

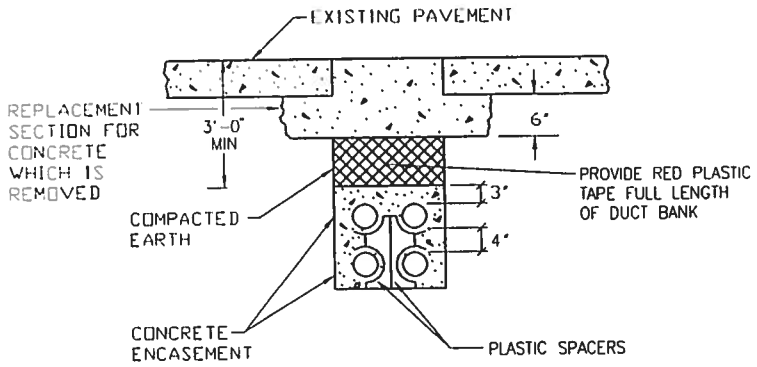

TYPICAL DUCT BANK SECTION OF 4-4" C BENEATH PAVED SURFACES

NO SCALE

NOTE: SIMILAR FOR 2-4" & 3-4" C DUCT BANKS

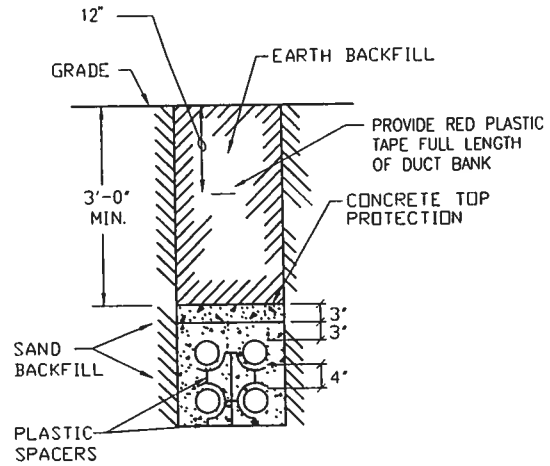

TYPICAL DUCT BANK SECTION OF 4-4" C BENEATH UNPAVED SURFACES

NO SCALE

NOTE: SIMILAR FOR 2-4" & 3-4" C DUCT BANKS

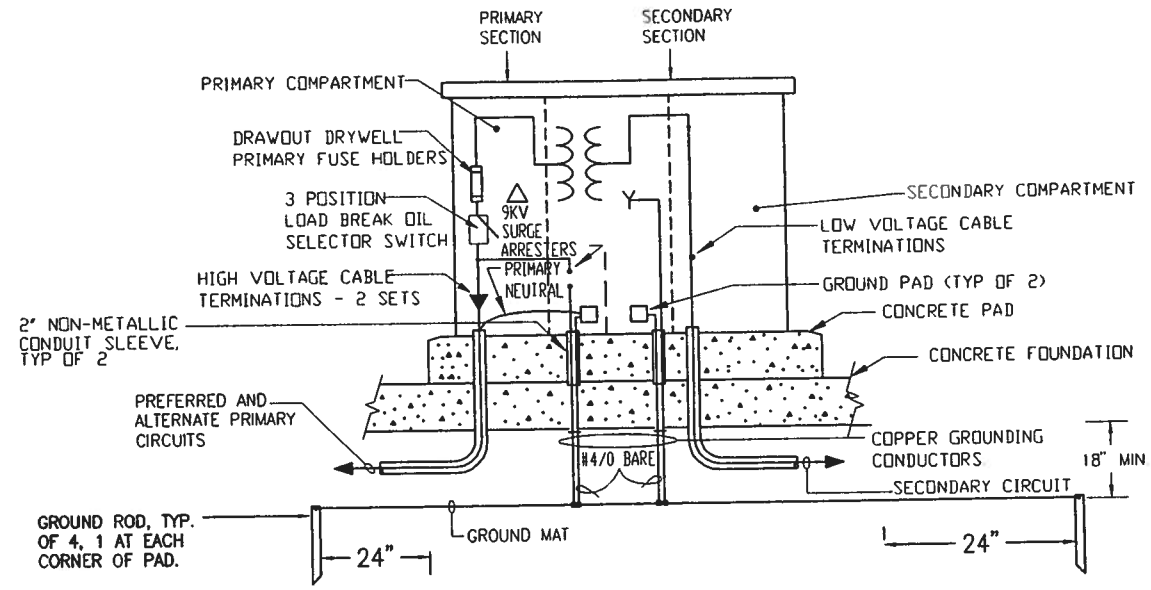

TYPICAL PAD-MOUNTED TRANSFORMER DETAIL

NO SCALE

2000KVA/2240KVA 55°/65°
13200/7200V TO 480Y/277V, 5.75%Z

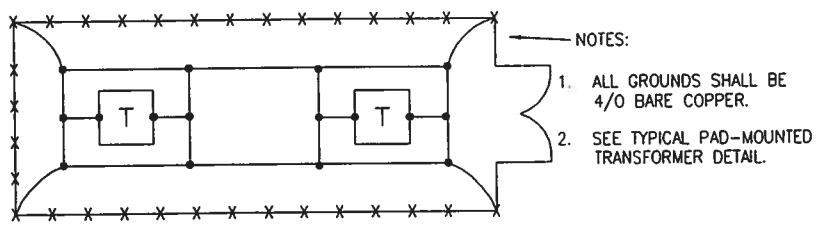

PAD-MOUNTED TRANSFORMERS AND FENCE GROUNDING DETAIL

NO SCALE

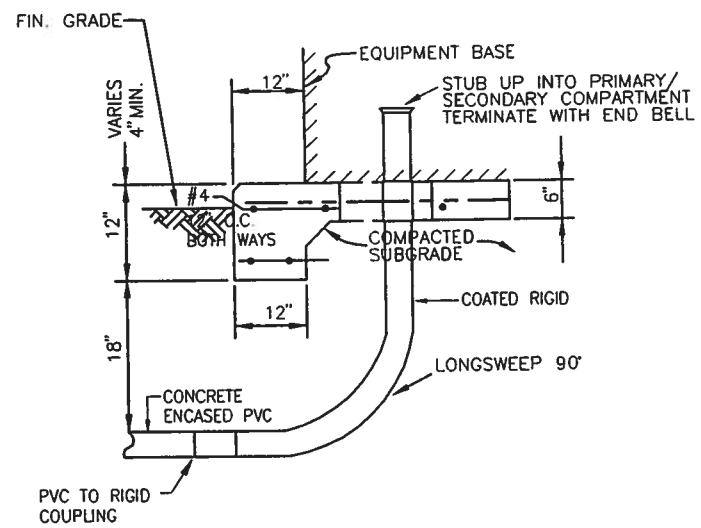

TYPICAL EQUIPMENT STUB UP

NO SCALE

SEAL AREA

ENG. DIV. DIR.: DATE: SATISFACTORY TO:

DATE

REVISION DESCRIPTION

NAVAL FACILITIES ENGINEERING COMMAND

DEPARTMENT OF THE NAVY

NAVY PUBLIC WORKS CENTER, JACKSONVILLE, FL

ROOSEVELT ROADS, P.R.

U.S. NAVAL STATION

SHERLOCK, SMITH & ADAMS, INC.
ARCHITECTS - ENGINEERS
MONTGOMERY, ALABAMA

U.S. NAVAL STATION ROOSEVELT ROADS, P.R.

REPAIRS TO NAVAL HOSPITAL

CONSTR. CONTR. NO. | SPECIFICATION NO. | NAVFAC DRWG. NO. | TF NO | SHEET ? OF ??

PLATE NO.

ES

P:\95-113\EL\113ES303.dwg, (48|96), 02/27/96 at 14:09:48 by MORRISSETTE_J

PWC #

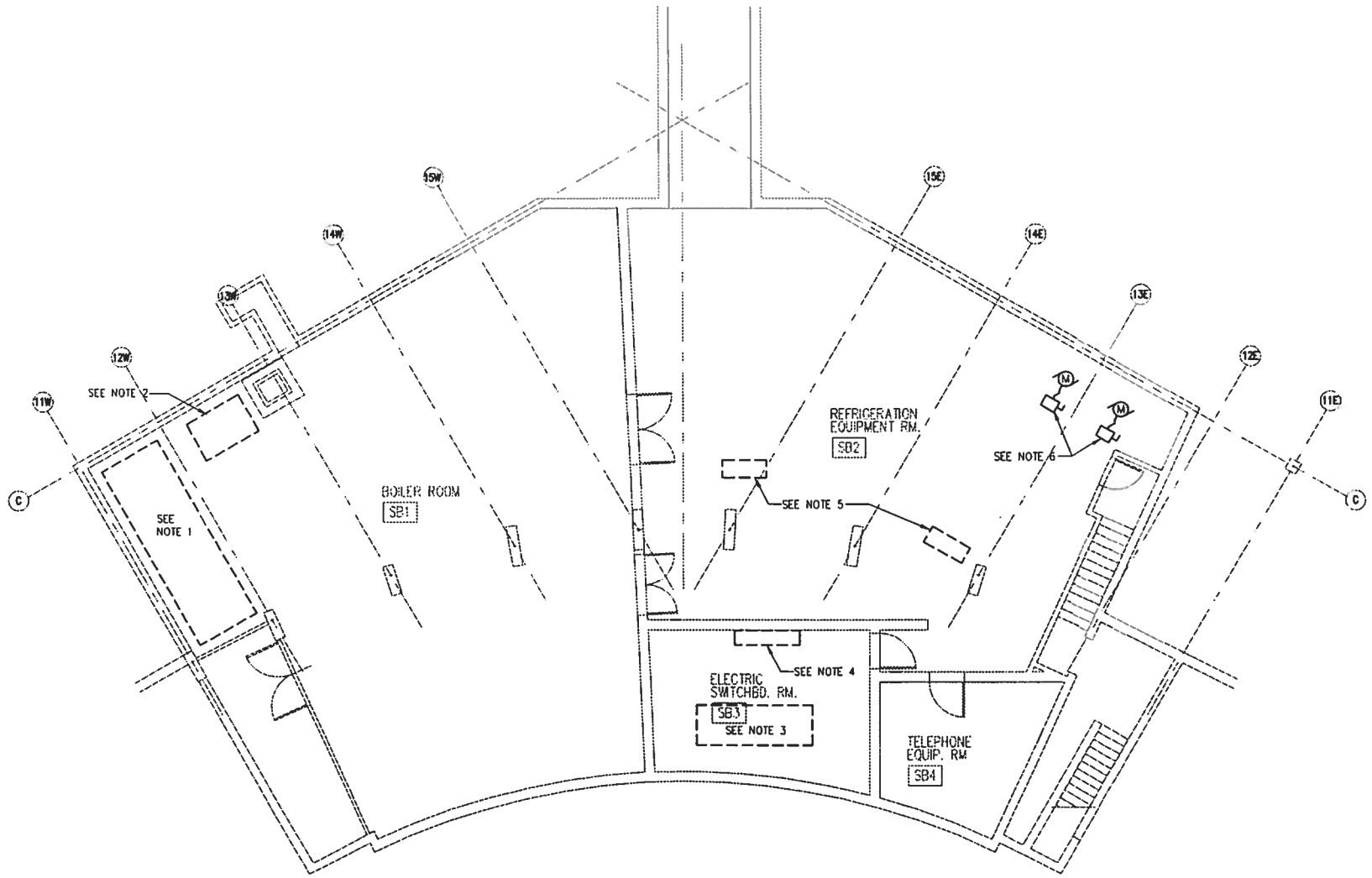

NOTES:

1. REMOVE 800KW EMERGENCY GENERATOR. TURN EQUIPMENT OVER TO THE GOVERNMENT. COORDINATE DEMOLITION WITH THE PHASING PLANS. SEE SHEETS A0-2 TO A0-5.
2. REMOVE 1200A/4P AUTOMATIC TRANSFER SWITCH WITH BYPASS ISOLATION OPTION. TURN EQUIPMENT OVER TO THE GOVERNMENT. COORDINATE DEMOLITION WITH THE PHASING PLANS. SEE SHEETS A0-2 TO A0-5.
3. REMOVE 3000A MAIN SWITCHBOARD. COORDINATE DEMOLITION WITH THE PHASING PLANS. SEE SHEETS A0-2 TO A0-5.
4. REMOVE 1200A EMERGENCY DISTRIBUTION PANEL "EDP". COORDINATE DEMOLITION WITH THE PHASING PLANS. SEE SHEETS A0-2 TO A0-5.
5. REMOVE CHILLER STARTER AND CONTROLS. COORDINATE DEMOLITION WITH THE PHASING PLANS. SEE SHEET A0-2 TO A0-5.
6. REMOVE EXISTING DISCONNECT SWITCH AND WIRE AND CONDUIT BACK TO SOURCE.

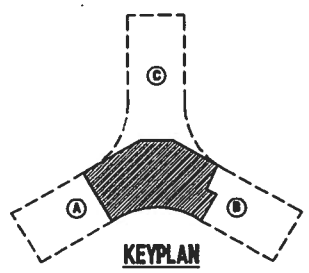

KEYPLAN

0 5 10 15 20
GRAPHIC SCALE
1/8"=1'-0"

DEMOLITION FLOOR PLAN
SUB-BASEMENT FLOOR

SCALE: 1/8" = 1'-0"

SEAL AREA

ENG. DIV. DIR.: DATE

SATISFACTORY TO:

REVISION DESCRIPTION	DATE

NAVAL FACILITIES ENGINEERING COMMAND

DEPARTMENT OF THE NAVY

NAVY PUBLIC WORKS CENTER, JACKSONVILLE, FL

U.S. NAVAL STATION ROOSEVELT ROADS, P.R.

SHERLOCK, SMITH & ADAMS, INC.
ARCHITECTS – ENGINEERS
MONTGOMERY, ALABAMA

U.S. NAVAL STATION ROOSEVELT ROADS, P.R.

REPAIRS TO NAVAL HOSPITAL

–

CONSTR. CONTR. NO.	SPECIFICATION NO.	NAVFAC DRWG. NO.	TF NO.
			SHEET ? OF ??

PLATE NO.

ED

PWC #

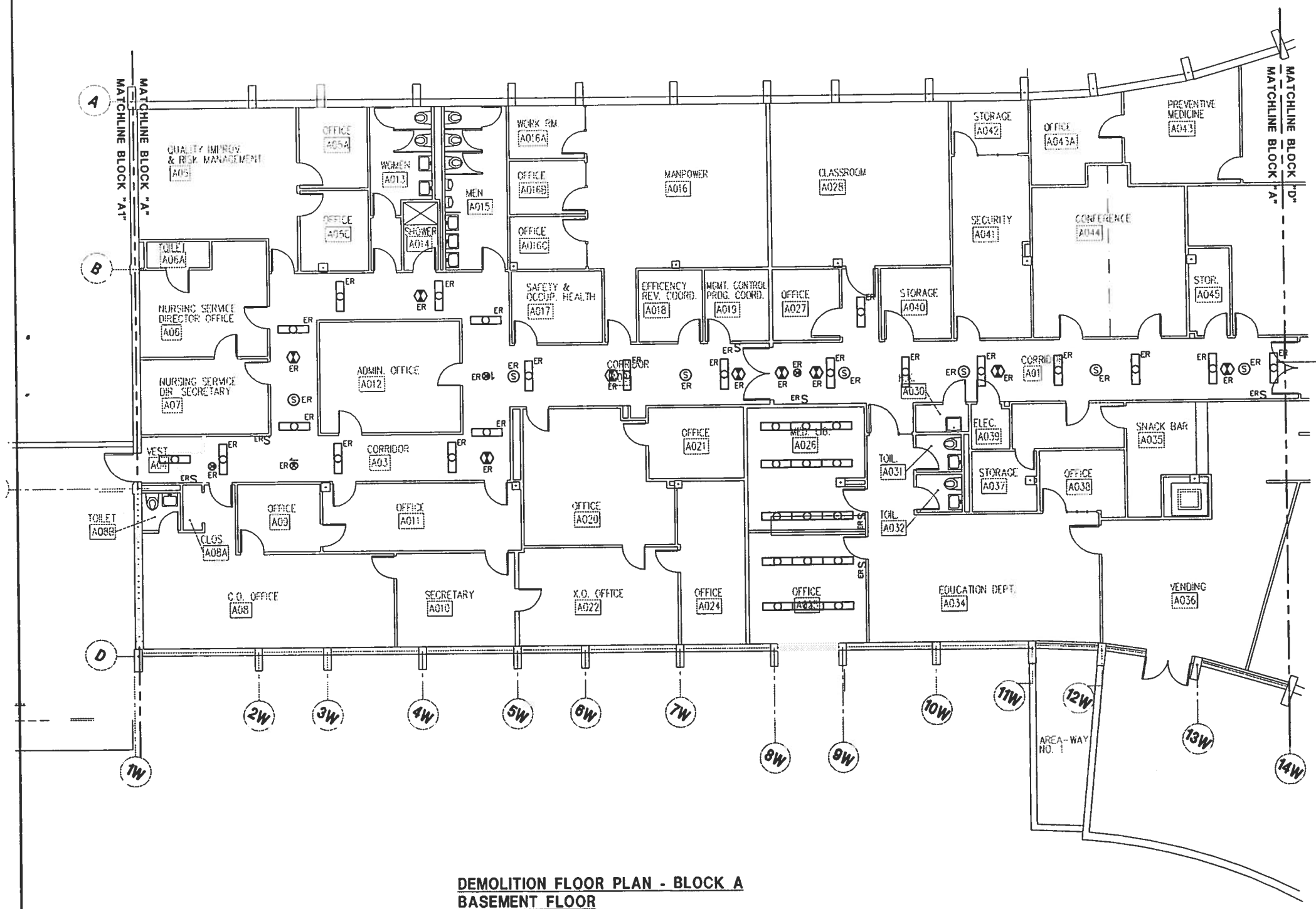

DEMOLITION FLOOR PLAN - BLOCK A
BASEMENT FLOOR

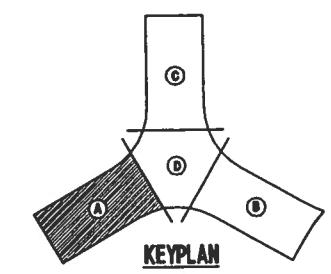

KEYPLAN

0 5 10 15 20
GRAPHIC SCALE
1/8"=1'-0"

SHERLOCK, SMITH & ADAMS, INC.
ARCHITECTS – ENGINEERS
MONTGOMERY, ALABAMA

U.S. NAVAL STATION ROOSEVELT ROADS, P.R.
REPAIRS TO NAVAL HOSPITAL

CONSTR. CONTR. NO. | SPECIFICATION NO. | NAVFAC DRWG. NO. | TF NO. | SHEET ? OF ??

DEPARTMENT OF THE NAVY
NAVAL FACILITIES ENGINEERING COMMAND
NAVY PUBLIC WORKS CENTER, JACKSONVILLE, FL
U.S. NAVAL STATION ROOSEVELT ROADS, P.R.

PLATE NO. E

PWC #

SEAL AREA

ENG. DIV. DIR. DATE

REVISION DESCRIPTION DATE