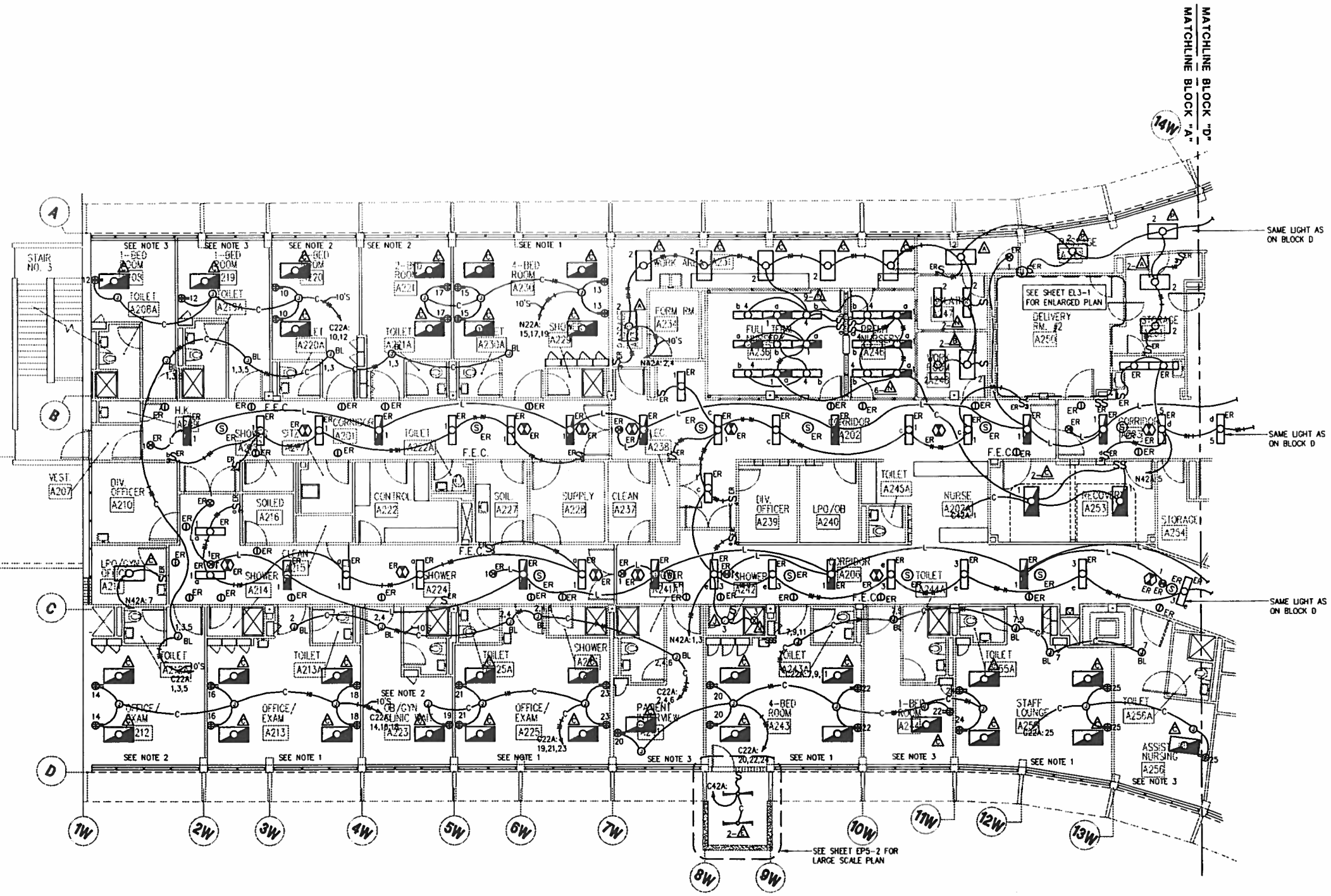


# FLOOR PLAN - BLOCK A
# SECOND FLOOR

NOTES:

1 TYPICAL 4 BED PATIENT ROOM. SEE SHEET EL3-2.
2 TYPICAL 2 BED PATIENT ROOM. SEE SHEET EL3-2.
3 TYPICAL 1 BED PATIENT ROOM. SEE SHEET EL3-2.

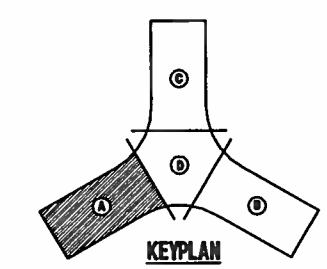


GRAPHIC SCALE
1/8"=1'-0"

SHERLOCK, SMITH & ADAMS, INC.
ARCHITECTS - ENGINEERS
MONTGOMERY, ALABAMA

U.S. NAVAL STATION ROOSEVELT ROADS, P.R.
REPAIRS TO NAVAL HOSPITAL
-

CONSTR. CONTR. NO. | SPECIFICATION NO. | NAVFAC DRWG. NO. | TF NO. | SHEET ? OF ??

SEAL AREA

ENG. DIV. DIR.: DATE:
SATISFACTORY TO: DATE:
DESIGN BY: JEA DRAWN BY: CBN
CHK BY: RES APPROVED:

REVISION DESCRIPTION | DATE

NAVAL FACILITIES ENGINEERING COMMAND
DEPARTMENT OF THE NAVY
NAVY PUBLIC WORKS CENTER, JACKSONVILLE, FL
U.S. NAVAL STATION ROOSEVELT ROADS, P.R.
REPAIRS TO NAVAL HOSPITAL
ELECTRICAL PLAN - SECOND FLOOR - WING A

PWC DWG. NO. | NAVFAC DWG. NO. | CONSTR. CONTR. NO.

PLATE NO.
EP2-8

PWC #

P:\95-113\EL\113EP208.dwg, (4896), 02/13/96 at 07:56:01 by CAUTHEN_T

P:\95-113\EL\113EP208.dwg, (4896), 03/01/96 at 09:04:22 by Nelson_D

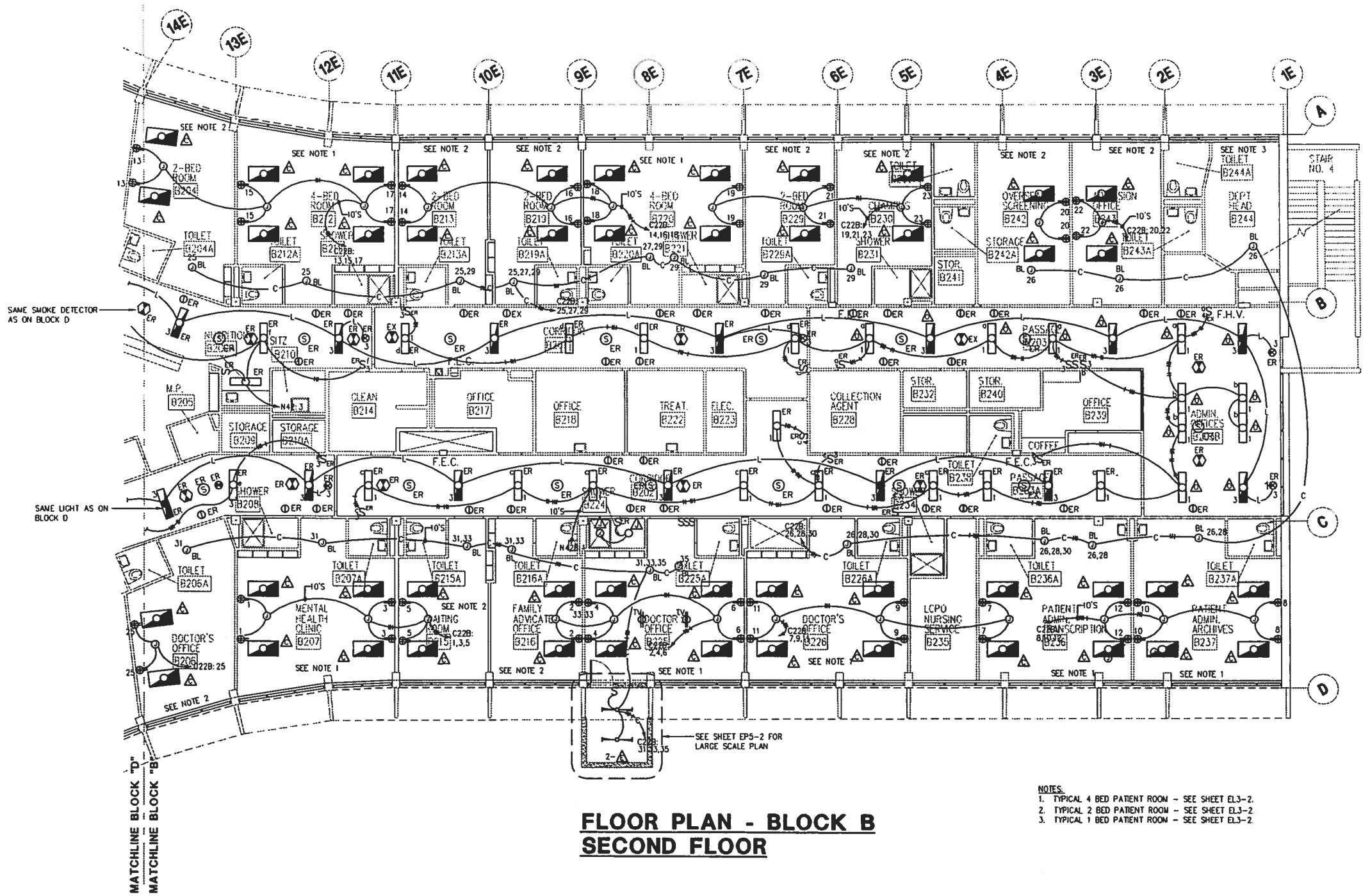


## FLOOR PLAN - BLOCK B
## SECOND FLOOR

NOTES:
1. TYPICAL 4 BED PATIENT ROOM - SEE SHEET EL3-2.
2. TYPICAL 2 BED PATIENT ROOM - SEE SHEET EL3-2.
3. TYPICAL 1 BED PATIENT ROOM - SEE SHEET EL3-2.

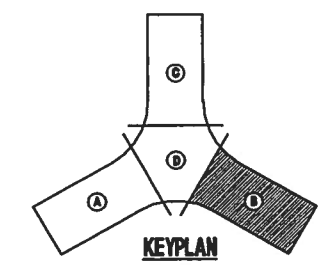


KEYPLAN

GRAPHIC SCALE 1/8"=1'-0"
0 5 10 15 20

SHERLOCK, SMITH & ADAMS, INC.
ARCHITECTS – ENGINEERS
MONTGOMERY, ALABAMA

U.S. NAVAL STATION ROOSEVELT ROADS, P.R.
REPAIRS TO NAVAL HOSPITAL
–

CONSTR. CONTR. NO | SPECIFICATION NO. | NAVFAC DRWG. NO. | TF NO. | SHEET ? OF ??

SEAL AREA

ENG. DIV. DIR.: DATE:
SATISFACTORY TO: DATE:
DESIGN BY: EA DRAWN BY: CBN
CHK BY: RES APPROVED:

REVISION DESCRIPTION | DATE

NAVAL FACILITIES ENGINEERING COMMAND
DEPARTMENT OF THE NAVY
NAVY PUBLIC WORKS CENTER, JACKSONVILLE, FL
U.S. NAVAL STATION ROOSEVELT ROADS, P.R.
REPAIRS TO NAVAL HOSPITAL
ELECTRICAL DEMOLITION PLAN – SECOND FLOOR – WING B

PWC DWG. NO. | NAVFAC DWG. NO. | CONSTR. CONTR. NO.

PLATE NO.
EP2-9

PWC #

P:\95-113\EL\113EP209.dwg, (48|96), 02/28/96 at 10:52:15 by MORRISSETTE_J

P:\95-113\EL\113EP209.dwg, (48|96), 03/01/96 at 09:34:51 by Nelson_B

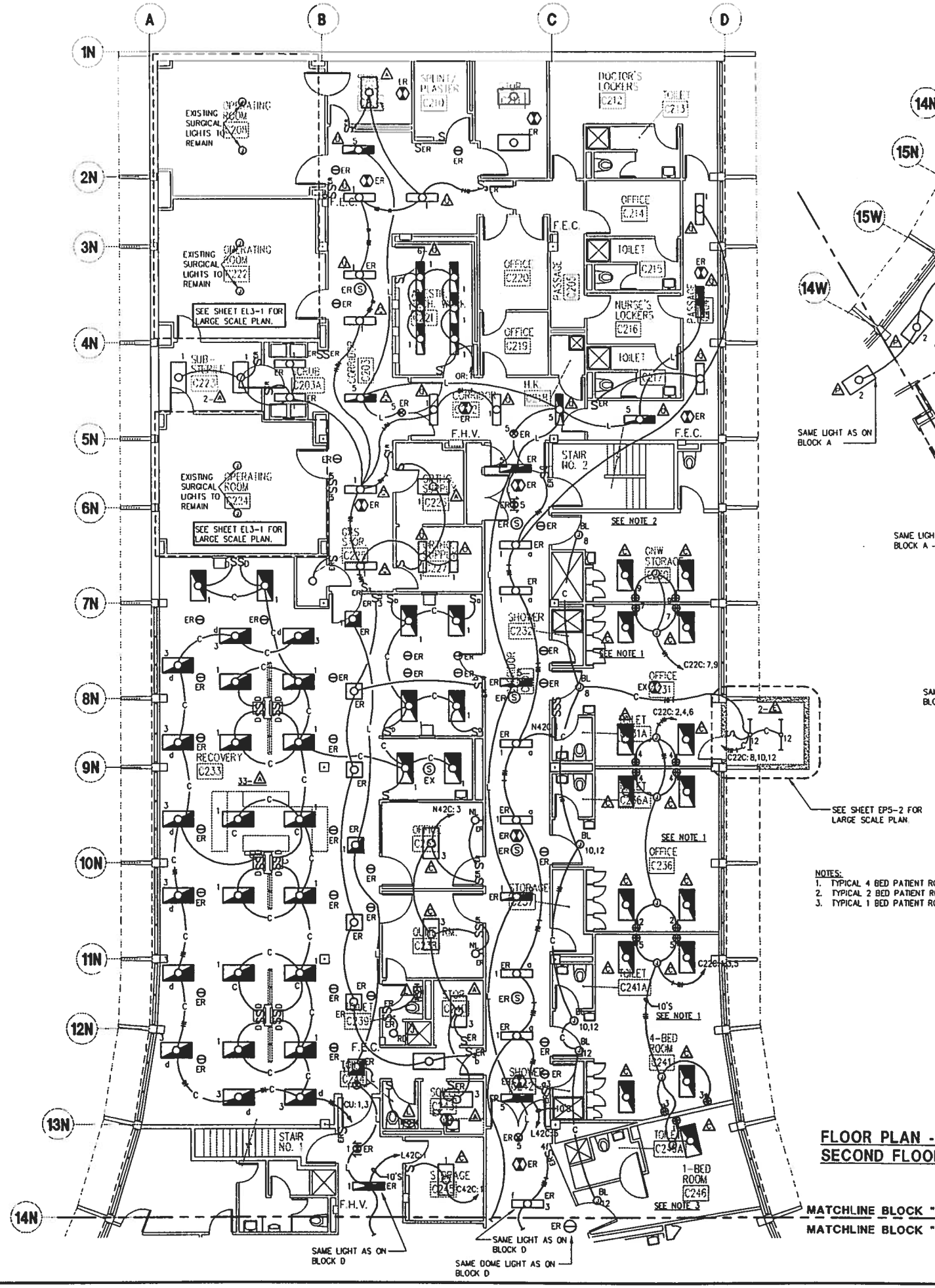


FLOOR PLAN - BLOCK C
SECOND FLOOR

NOTES:
1. TYPICAL 4 BED PATIENT ROOM. SEE SHEET EL3-2.
2. TYPICAL 2 BED PATIENT ROOM. SEE SHEET EL3-2.
3. TYPICAL 1 BED PATIENT ROOM. SEE SHEET EL3-2.

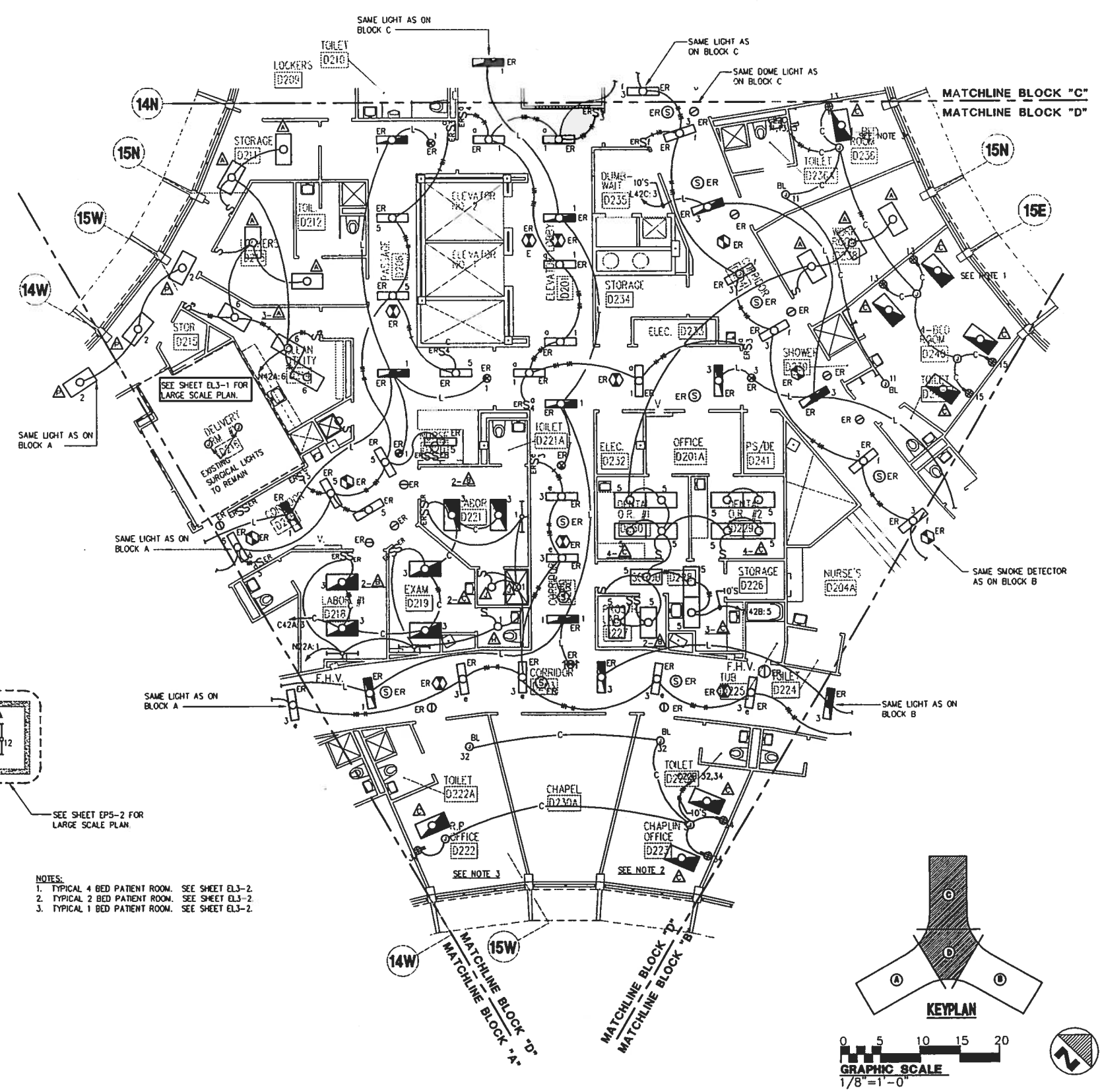


FLOOR PLAN - BLOCK D
SECOND FLOOR

SHERLOCK, SMITH & ADAMS, INC.
ARCHITECTS - ENGINEERS
MONTGOMERY, ALABAMA

U.S. NAVAL STATION ROOSEVELT ROADS, P.R.
REPAIRS TO NAVAL HOSPITAL

CONSTR. CONTR. NO. | SPECIFICATION NO. | NAVFAC DRWG. NO. | TF NO. | SHEET ? OF ??

PLATE NO. EP2-10

SEAL AREA

ENG. DIV. DIR.: DATE:
SATISFACTORY TO: DATE:
DESIGN BY JEA DRAWN BY CBN
CHK BY RES APPROVED:

REVISION DESCRIPTION | DATE

DEPARTMENT OF THE NAVY
NAVY PUBLIC WORKS CENTER, JACKSONVILLE, FL
NAVAL FACILITIES ENGINEERING COMMAND

U.S. NAVAL STATION ROOSEVELT ROADS, P.R.
REPAIRS TO NAVAL HOSPITAL
ELECTRICAL DEMOLITION PLAN - SECOND FLOOR - WINGS C & D

CONSTR. CONTR. NO. | NAVFAC DWG. NO. | PWC DWG. NO.

PWC #

P:\95-113\EL\113EP210.dwg, (48|96), 02/16/96 at 15:34:35 by CAUTHEN_T

P:\95-113\EL\113EP210.dwg, (48|96), 03/01/96 at 10:53:25 by Nelson_B

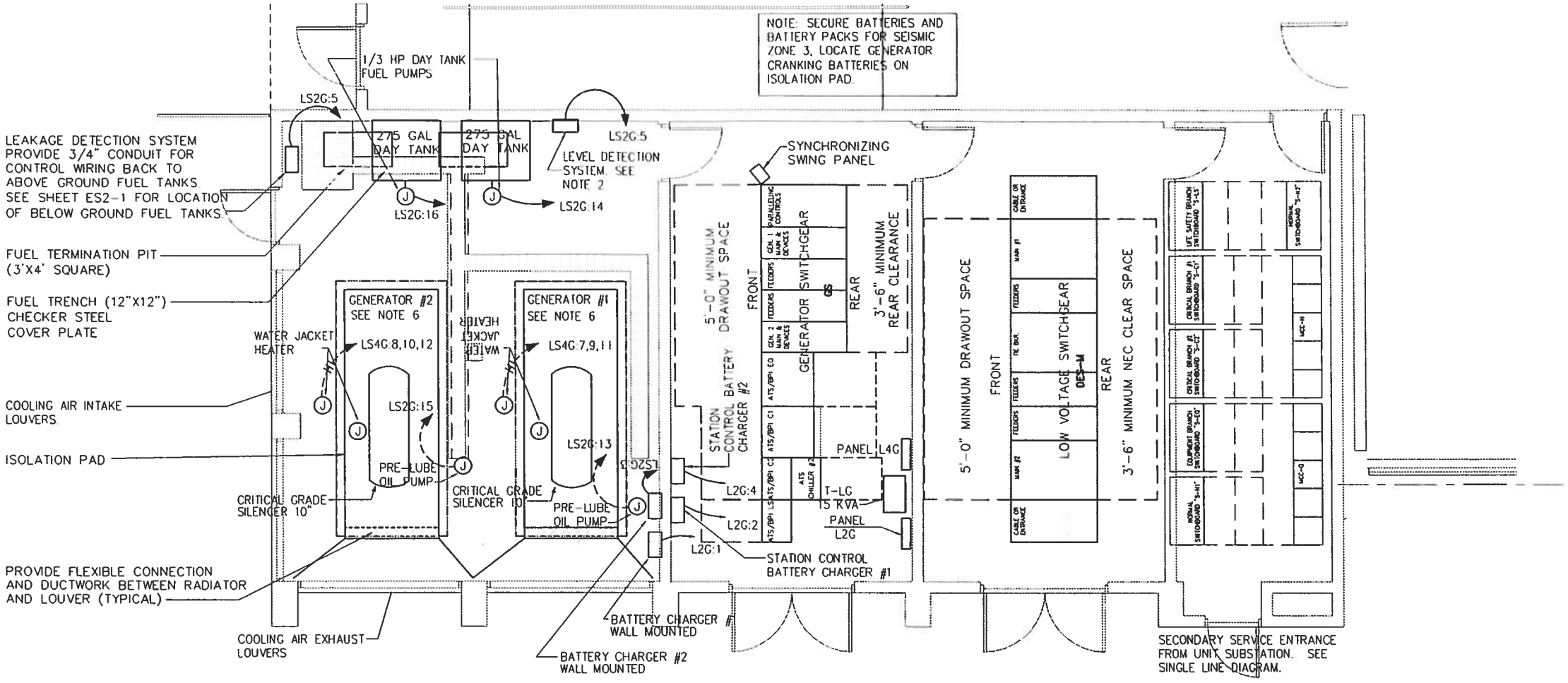


**GENERATOR BUILDING ELECTRICAL ROOM LAYOUT**
SCALE: 1/4" = 1'-0"

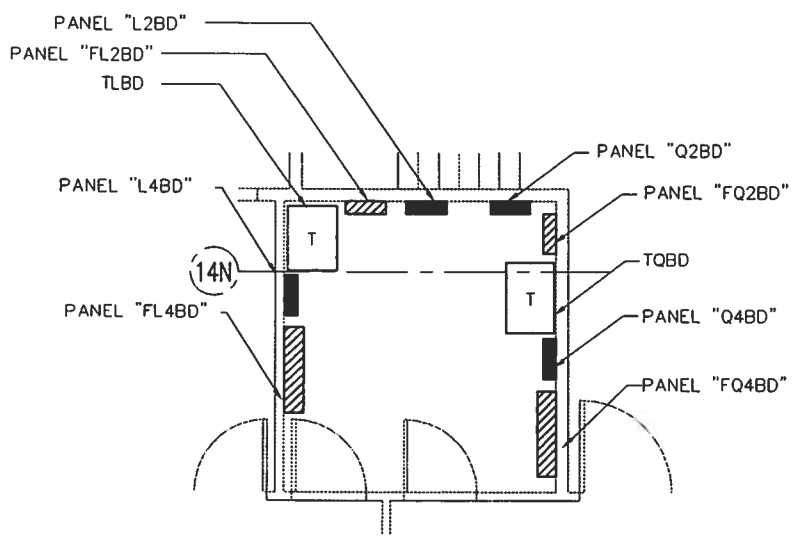


**BASEMENT FLOOR - WING "D" ELECTRICAL ROOM - "BD" LAYOUT**
SCALE: 1/4" = 1'-0"

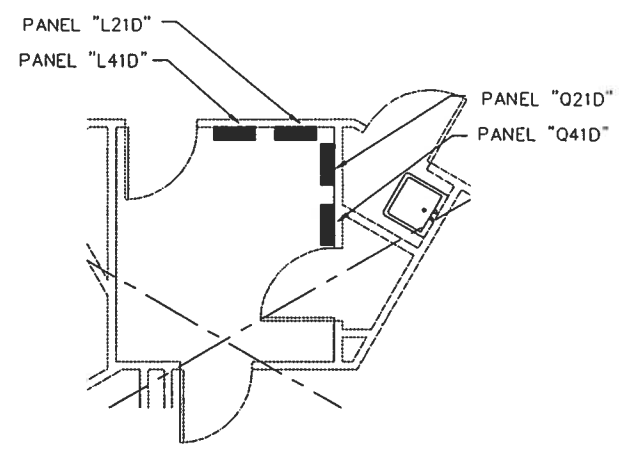


**FIRST FLOOR - WING "D" ELECTRICAL ROOM - "1D" LAYOUT**
SCALE: 1/4" = 1'-0"

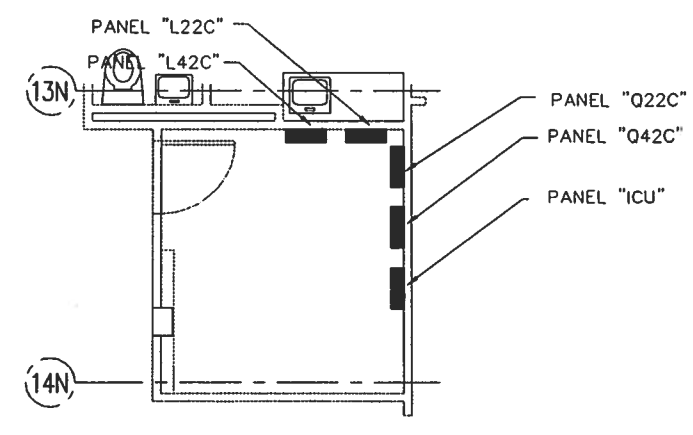


**SECOND FLOOR - WING "C" ELECTRICAL ROOM - "2CA" LAYOUT**
SCALE: 1/4" = 1'-0"

SHERLOCK, SMITH & ADAMS, INC.
ARCHITECTS - ENGINEERS
MONTGOMERY, ALABAMA

U.S. NAVAL STATION ROOSEVELT ROADS, P.R.
REPAIRS TO NAVAL HOSPITAL

CONSTR. CONTR. NO. | SPECIFICATION NO. | NAVFAC DRWG. NO. | TF NO.
SHEET ? OF ??

SEAL AREA

DESIGN BY: SWA DRAWN BY: CBN

REVISION DESCRIPTION | DATE

DEPARTMENT OF THE NAVY
NAVAL FACILITIES ENGINEERING COMMAND
NAVY PUBLIC WORKS CENTER, JACKSONVILLE, FL
U.S. NAVAL STATION ROOSEVELT ROADS, P.R.
REPAIRS TO NAVAL HOSPITAL
ELECTRICAL ROOM LAYOUTS - 1/4" SCALE

PLATE NO.
EP5-1

PWC #

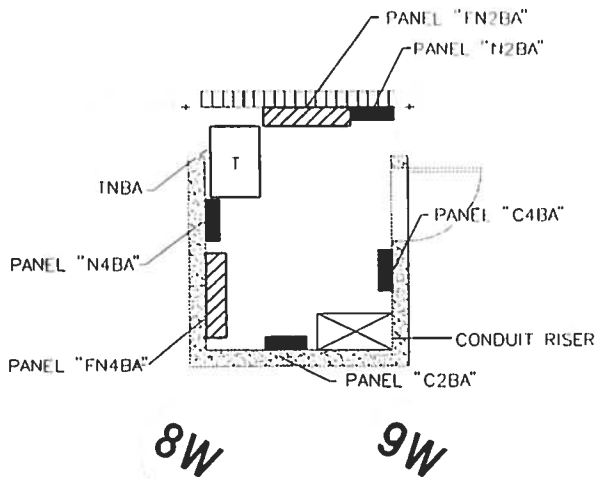


**BASEMENT FLOOR - WING "A"**
**ELECTRICAL ROOM - "BA" LAYOUT**
SCALE: 1/4" = 1'-0"

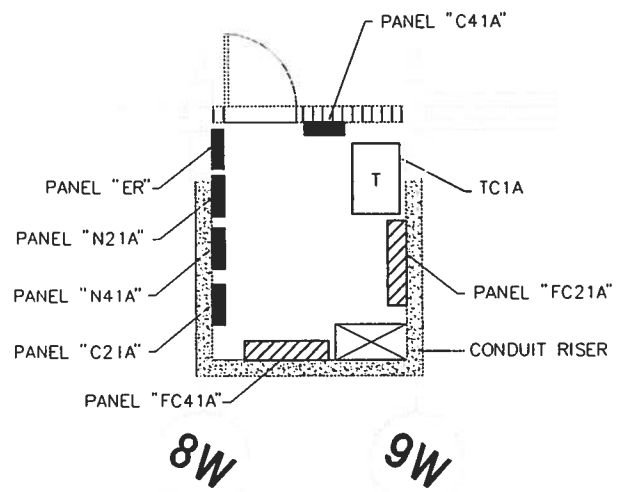


**FIRST FLOOR - WING "A"**
**ELECTRICAL ROOM - "1A" LAYOUT**
SCALE: 1/4" = 1'-0"

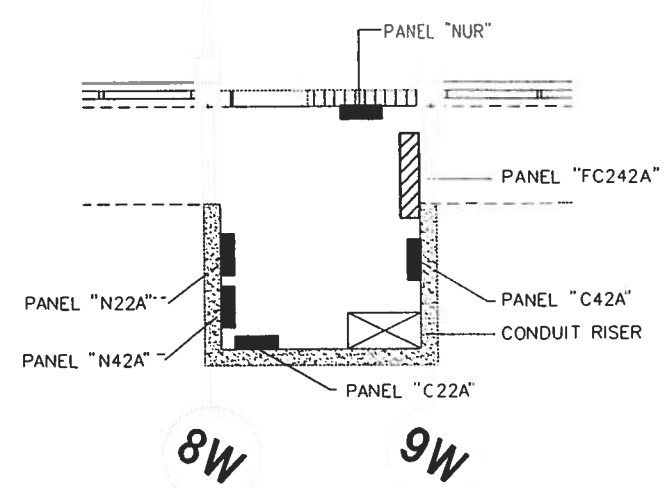


**SECOND FLOOR - WING "A"**
**ELECTRICAL ROOM - "2A" LAYOUT**
SCALE: 1/4" = 1'-0"

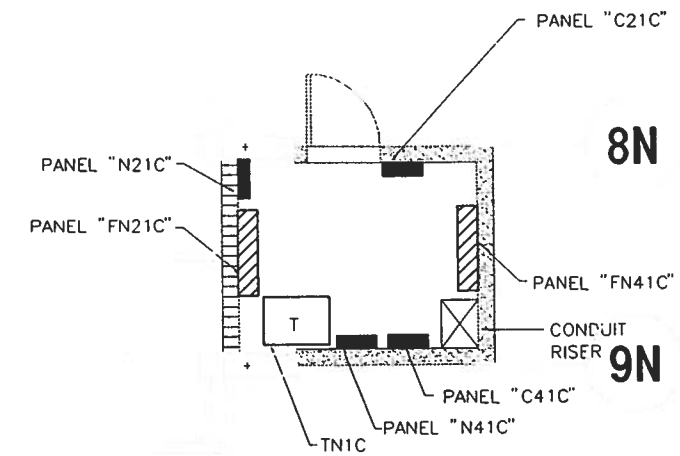


**FIRST FLOOR - WING "C"**
**ELECTRICAL ROOM - "1C" LAYOUT**
SCALE: 1/4" = 1'-0"

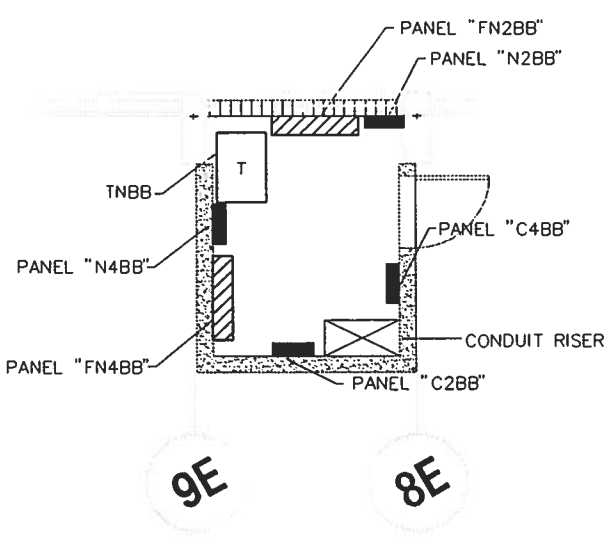


**BASEMENT FLOOR - WING "B"**
**ELECTRICAL ROOM - "BB" LAYOUT**
SCALE: 1/4" = 1'-0"

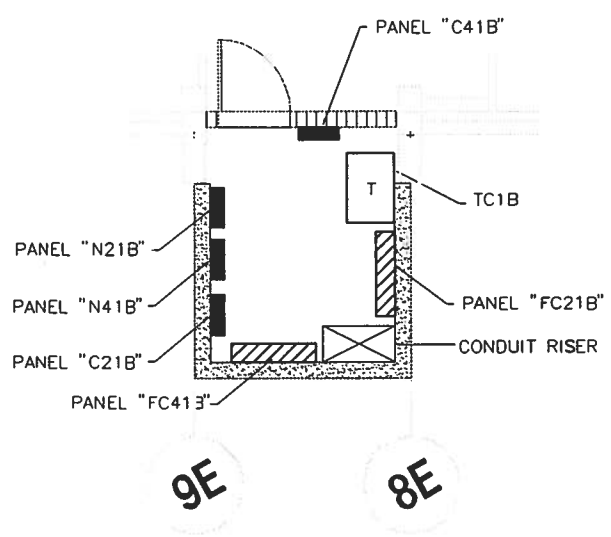


**FIRST FLOOR - WING "B"**
**ELECTRICAL ROOM - "1B" LAYOUT**
SCALE: 1/4" = 1'-0"

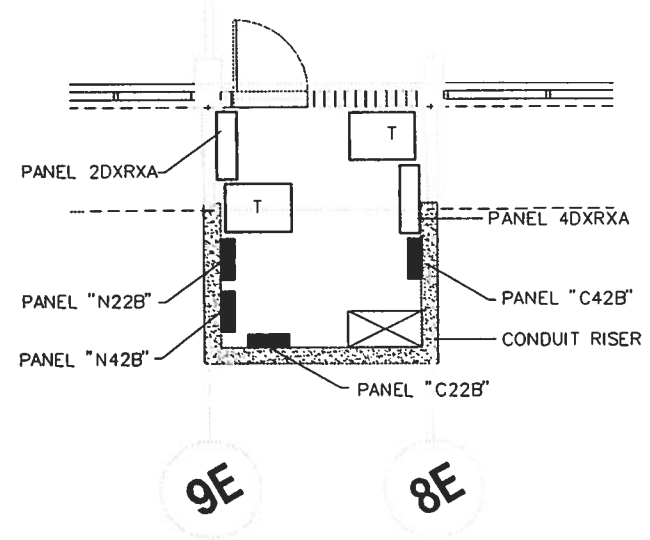


**SECOND FLOOR - WING "B"**
**ELECTRICAL ROOM - "2B" LAYOUT**
SCALE: 1/4" = 1'-0"

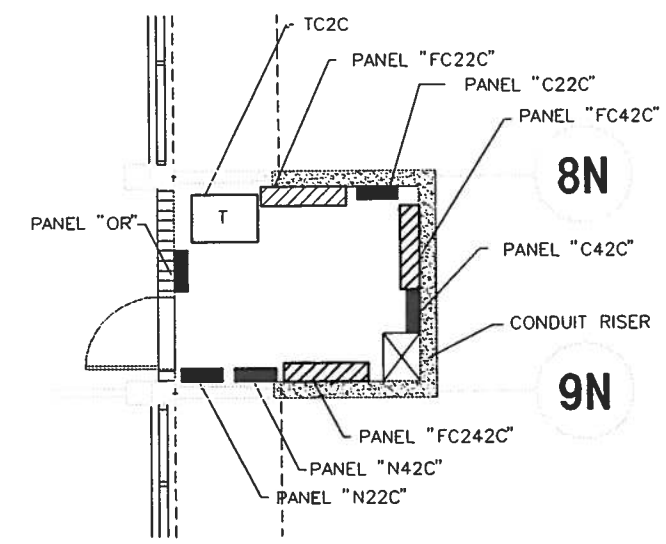


**SECOND FLOOR - WING "C"**
**ELECTRICAL ROOM - "2C" LAYOUT**
SCALE: 1/4" = 1'-0"

SEAL AREA

ENG. DIV. DIR.: DATE
SATISFACTORY TO: DATE
DESIGN BY: SWA DRAWN BY: CBN

REVISION DESCRIPTION DATE

DEPARTMENT OF THE NAVY
NAVAL FACILITIES ENGINEERING COMMAND
NAVY PUBLIC WORKS CENTER, JACKSONVILLE, FL

U.S. NAVAL STATION ROOSEVELT ROADS, P.R.
REPAIRS TO NAVAL HOSPITAL
ELECTRICA ROOM LAYOUTS – 1/4" SCALE

SHERLOCK, SMITH & ADAMS, INC.
ARCHITECTS – ENGINEERS
MONTGOMERY, ALABAMA

U.S. NAVAL STATION ROOSEVELT ROADS, P.R.
REPAIRS TO NAVAL HOSPITAL

CONSTR. CONTR. NO. | SPECIFICATION NO. | NAVFAC DRWG. NO. | TF NO.
SHEET ? OF ??

PLATE NO.
EP5-2

PWC #

## NOTES

WHERE THE TERMS BELOW ARE USED IN PANEL SCHEDULES, SWITCHBOARD SCHEDULES, SWITCHGEAR SCHEDULES AND ELEVATIONS, AND MOTOR CONTROL CENTER SCHEDULES, THEY ARE DEFINED AS FOLLOWS:

1. SPARE – A CIRCUIT BREAKER OR MOTOR STARTER PROVIDED IN THE EQUIPMENT TO WHICH NO CIRCUIT IS CONNECTED.
   - A.) PANELBOARDS – A CIRCUIT BREAKER OF THE RATING INDICATED.
   - B.) SWITCHBOARDS – A CIRCUIT BREAKER OF THE RATING INDICATED, FURNISHED WITH SENSORS.
   - C.) SWITCHGEAR – A CIRCUIT BREAKER OF THE RATING INDICATED, FURNISHED WITH SENSORS.
   - D.) MOTOR CONTROL CENTER – A STARTER UNIT OF THE NEMA SIZE SHOWN, FURNISHED WITH CIRCUIT BREAKER AND OVERLOAD RELAYS.
2. SPACE – A FULLY BUSSED SPACE FOR A CIRCUIT BREAKER OR MOTOR STARTER OF THE SIZE NOTED, ARRANGED SO THAT THE APPROPRIATE DEVICE MAY BE INSTALLED AS FOLLOWS:
   - A.) PANELBOARD – BOLT TO PREDRILLED AND TAPPED BUS. PROVIDE BLANKING DEVICE.
   - B.) MOTOR CONTROL CENTER – STAB-IN, PROVIDE BLANK DOOR.
3. PROVISION – A COMPARTMENT IN A SWITCHBOARD OR SWITCHGEAR, DESIGNED TO ACCEPT A CIRCUIT BREAKER OF THE RATING INDICATED WITHOUT MODIFICATION TO THE BASIC COMPARTMENT.
   - A.) SWITCHBOARD – PROVISIONS TO INSTALL INDIVIDUALLY MOUNTED MOLDED CASE CIRCUIT BREAKERS BY BOLTING TO PREDRILLED AND TAPPED BUS. PROVIDE BLANKING COVER.
   - B.) LOW VOLTAGE SWITCHGEAR – COMPARTMENTS SHALL CONTAIN PRIMARY STABS, GROUNDED METAL SAFETY SHUTTERS, SECONDARY CONTACTS, DRAWOUT RAILS, SMALL WIRING AND ALL OTHER DEVICES REQUIRED TO ACCOMODATE A FUTURE LOW VOLTAGE DRAW-OUT AIR CIRCUIT BREAKER OF THE RATING INDICATED. PROVIDE A BLANK COVER.
4. ALL BREAKERS TO BE 3 POLE UNLESS NOTED OTHERWISE. FOR SPARES AND SPACES SEE PANEL SCHEDULES.
5. ALL TRANSFORMERS TO BE 480 DELTA PRIMARY, 208V/120Y SECONDARY UNLESS NOTED OTHERWISE. NOTE THAT IN SOME CASES THE K-RATING CAUSES THE PHASE CONDUCTORS TO BE OVERSIZED (SECONDARY NEUTRAL CONDUCTORS ARE ALWAYS OVERSIZED).
6. ALL NEW BREAKERS ONLY IN DISTRIBUTION PANELS 70A AND ABOVE SHALL HAVE ADJUSTABLE INSTANTANEOUS TRIP. ALL BREAKERS IN LIGHTING AND APPLIANCE PANELS 70A AND ABOVE WHICH FEED TRANSFORMERS SHALL BE SUB-FEED TYPE WITH ADJUSTABLE INSTANTANEOUS TRIP. BREAKERS SHOWN TO HAVE SOLID STATE TRIP SHALL HAVE AS MANY FUNCTIONS AS REQUIRED TO ACHIEVE PROPER COORDINATION. THIS SHALL BE DETERMINED BY THE CONTRACTOR AND A COORDINATION STUDY/SHORT CIRCUIT STUDY SHALL BE SUBMITTED FOR APPROVAL. THIS STUDY SHALL INCLUDE EXISTING BREAKER.
7. ALL 208V PANELS EXCEPT LIFE SAFETY & EQUIPMENT SHALL HAVE NEUTRAL BARS SIZED AT A MINIMUM OF 1.73 TIMES THE RATING OF THE PANEL AND BE EQUIPPED WITH PROVISIONS TO CONNECT SEPARATE NEUTRALS FOR EACH BAR.
8. SEE TABLES ON SHEET E00-3 FOR FEEDER SIZES.
9. CONNECT NEUTRAL CONDUCTOR AND GROUND CONDUTOR TO A GROUNDING ELECTRODE IN EACH OUTLYING BUILDING PER N.E.C.
10. CONTRACTOR SHALL PROVIDE PANELBOARD BONDING AS INDICATED IN NEC 517-14 FOR ALL ELECTRICAL PANELBOARDS ON THE 1ST, 2ND & 3RD FLOORS OF THE HOSPITAL AS REQUIRED.
11. SEE SHEET EP7-3 FOR MIN. CONTINUOUS CURRENT RATING OF ALL AUTOMATIC TRANSFER SWITCHES.
12. MODIFY ELEVATOR CONTROLS SUCH THAT ONLY THE SERVICE ELEVATOR OPERATES WHEN THE HOSPITAL IS ON EMERGENCY POWER.

## LEGEND

SYMBOLS USED IN LOW VOLTAGE SINGLE LINE DIAGRAMS

- 52 — LOW VOLTAGE POWER DRAWOUT AIR CIRCUIT BREAKER WITH SOLID STATE TRIPPING DEVICES.
- LOW VOLTAGE INSULATE CASED CIRCUIT BREAKER WITH SOLID STATE TRIPPING DEVICES.
- FIXED INSULATED CASE CIRCUIT BREAKER WITH SOLID STATE TRIPPING DEVICES, SYMBOL WITH "E" INDICATES ELECTRICALLY OPERATED.
- MOLDED CASE CIRCUIT BREAKER WITH THERMAL-MAGNETIC TRIPS. SEE NOTE _ ON THIS SHEET
- GROUND CURRENT SENSOR
- GFR — GROUND FAULT RELAY
- GFS — GROUND FAULT SENSOR – PROVIDE ALARM (NOT TRIP) AS DETAILED ON SHEET EP7-4.
- A — AMMETER
- V — VOLTMETER
- S — AMMETER OR VOLTMETER PHASE SELECTOR SWITCH
- CT — CURRENT TRANSFORMER, RATIO AS SHOWN.
- KW D — KILOWATT METER WITH DEMAND HAND
- SURGE ARRESTER
- C — CONTACTOR, ELECTRICALLY OPERATED, MECHANICALLY HELD.
- AUTOMATIC TRANSFER SWITCH.
- B P I — AUTOMATIC TRANSFER SWITCH WITH BYPASS ISOLATIONS.
- 27 — UNDERVOLTAGE RELAY – DEVICE 27
- EX — EXISTING
- FEEDER SIZE, SEE TABLE, REFER TO SHEET E00-3

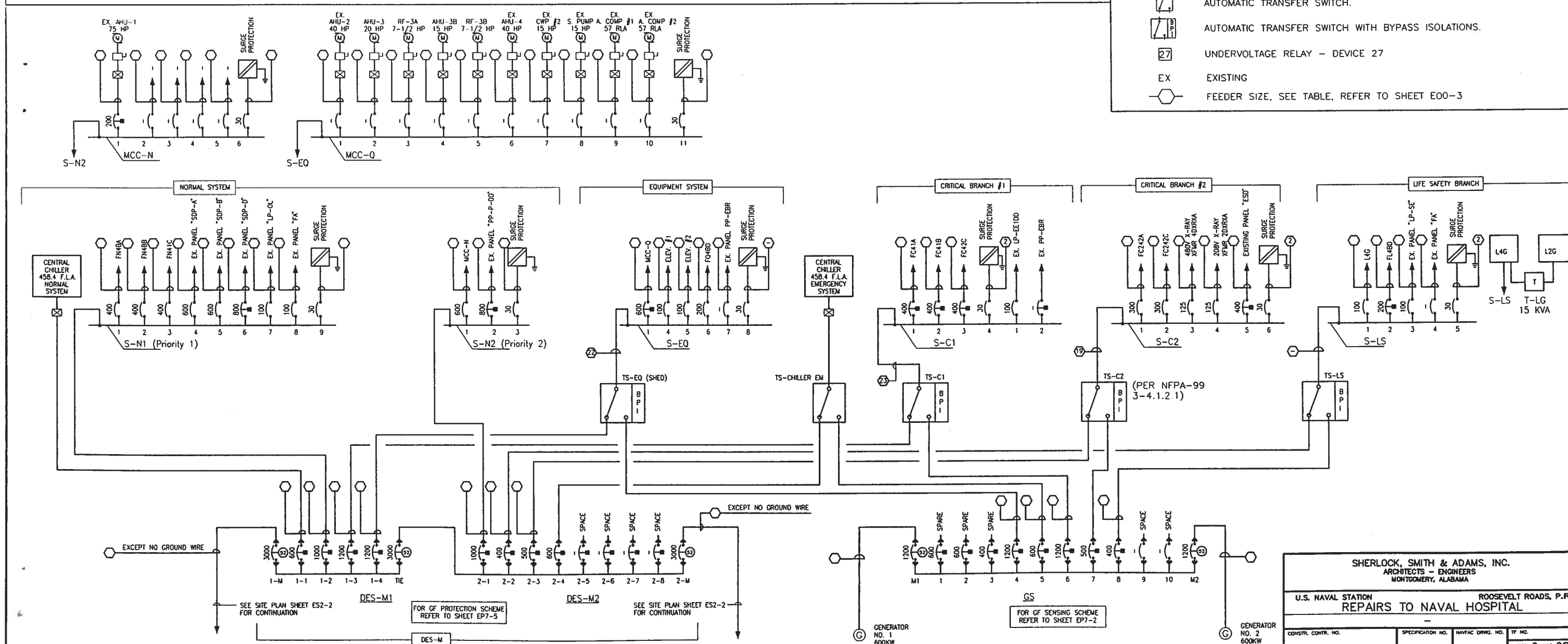


SHERLOCK, SMITH & ADAMS, INC.
ARCHITECTS – ENGINEERS
MONTGOMERY, ALABAMA

U.S. NAVAL STATION ROOSEVELT ROADS, P.R.
REPAIRS TO NAVAL HOSPITAL

CONSTR. CONTR. NO. | SPECIFICATION NO. | NAVFAC DRWG. NO. | TF NO. | SHEET ? OF ??

SEAL AREA

ENG. DIV. DIR.: DATE | SATISFACTORY TO: DATE | DESIGN BY: SWA | DRAWN BY: CBN | PLAN BY: DEC | APPROVED:

REVISION DESCRIPTION | DATE

NAVAL FACILITIES ENGINEERING COMMAND
DEPARTMENT OF THE NAVY
NAVY PUBLIC WORKS CENTER, JACKSONVILLE, FL
U.S. NAVAL STATION ROOSEVELT ROADS, P.R.
REPAIRS TO NAVAL HOSPITAL
NEW POWER SINGLE LINE DIAGRAM

PLATE NO. EP6-1

PWC #