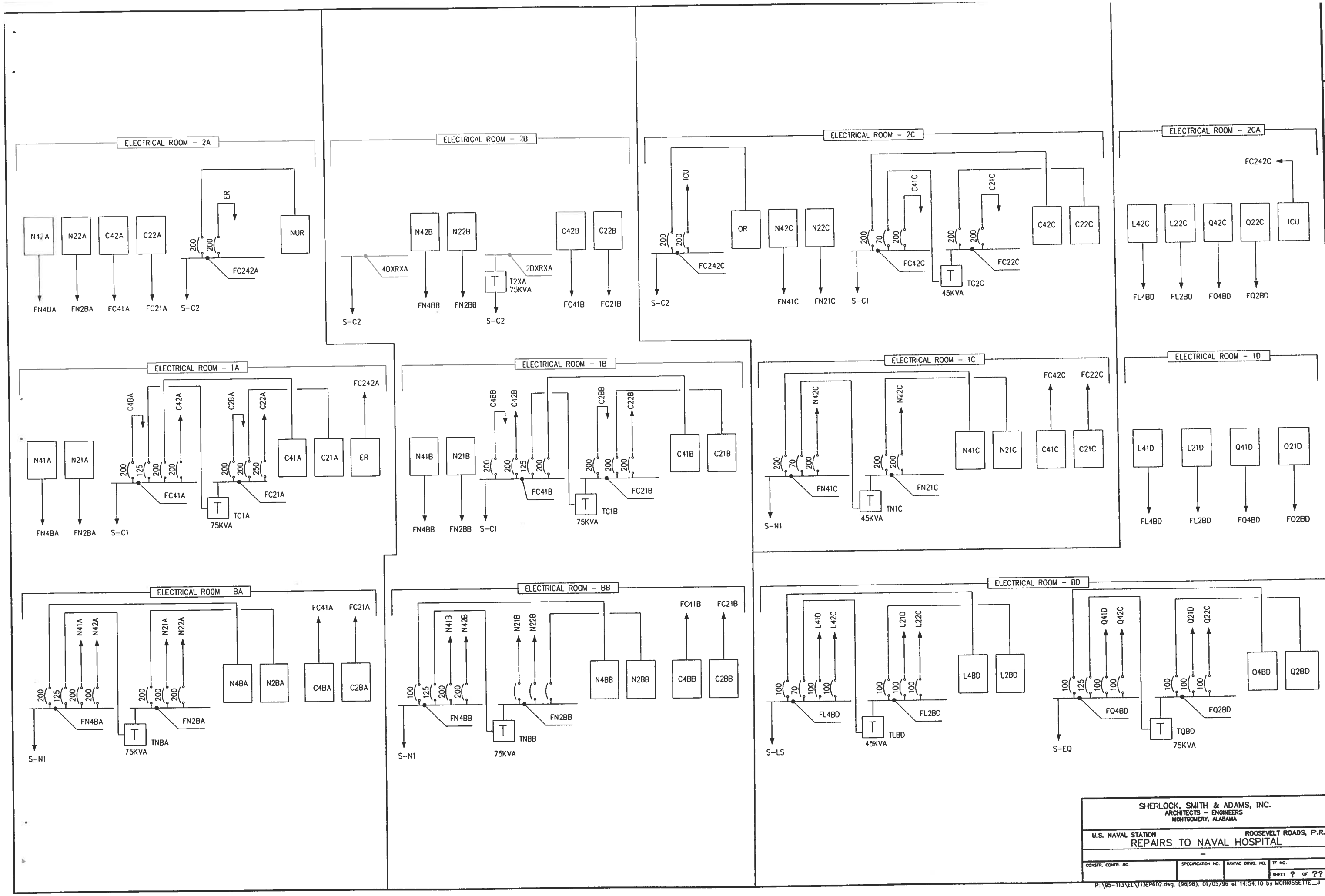

SHERLOCK, SMITH & ADAMS, INC.
ARCHITECTS - ENGINEERS
MONTGOMERY, ALABAMA

U.S. NAVAL STATION ROOSEVELT ROADS, P.R.
REPAIRS TO NAVAL HOSPITAL

CONSTR. CONTR. NO. | SPECIFICATION NO. | NAVFAC DRWG. NO. | TF NO. | SHEET ? OF ??

P:\95-113\EL\113EP602.dwg, (96|98), 01/05/96 at 14:54:10 by MORRISSETTE_J

PWC #

DESIGN BY: SWA
DRAWN BY: CBN
ENG. DIV. DIR.: DATE
SATISFACTORY TO: DATE
REVISION DESCRIPTION DATE

NAVAL FACILITIES ENGINEERING COMMAND
DEPARTMENT OF THE NAVY
NAVY PUBLIC WORKS CENTER, JACKSONVILLE, FL
U.S. NAVAL STATION ROOSEVELT ROADS, P.R.
REPAIRS TO NAVAL HOSPITAL
NEW POWER SINGLE LINE DIAGRAM

PLATE NO.
EP6-2

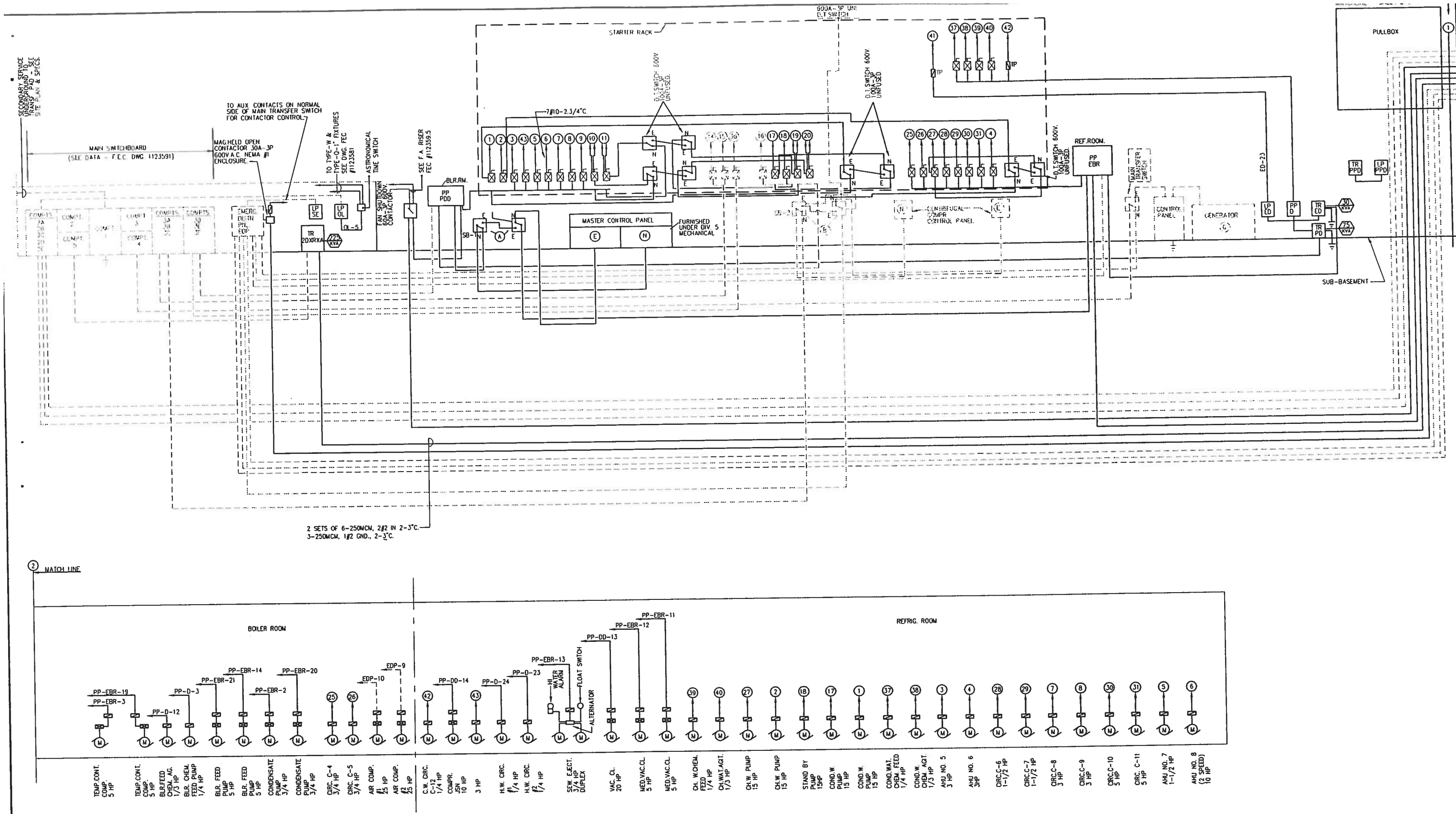

LEGEND

EXISTING TO REMAIN ————————

EXISTING TO BE REMOVED - - - - - - - - - -

DEMOLITION POWER SINGLE LINE DIAGRAM - PART A

SCALE: NOT TO SCALE

SHERLOCK, SMITH & ADAMS, INC.
ARCHITECTS - ENGINEERS
MONTGOMERY, ALABAMA

U.S. NAVAL STATION ROOSEVELT ROADS, P.R.
REPAIRS TO NAVAL HOSPITAL

CONSTR. CONTR. NO. | SPECIFICATION NO. | NAVFAC DRWG. NO. | TF NO. | SHEET ? OF ??

DEPARTMENT OF THE NAVY
NAVY PUBLIC WORKS CENTER, JACKSONVILLE, FL
NAVAL FACILITIES ENGINEERING COMMAND

U.S. NAVAL STATION ROOSEVELT ROADS, P.R.
REPAIRS TO NAVAL HOSPITAL
DEMOLITION POWER SINGLE LINE DIAGRAM - PART A

PLATE NO. EP6-3

PWC #

DESIGN BY: SWA DRAWN BY: MPC

ENG. DIV. DR.: DATE SATISFACTORY TO: DATE

REVISION DESCRIPTION DATE

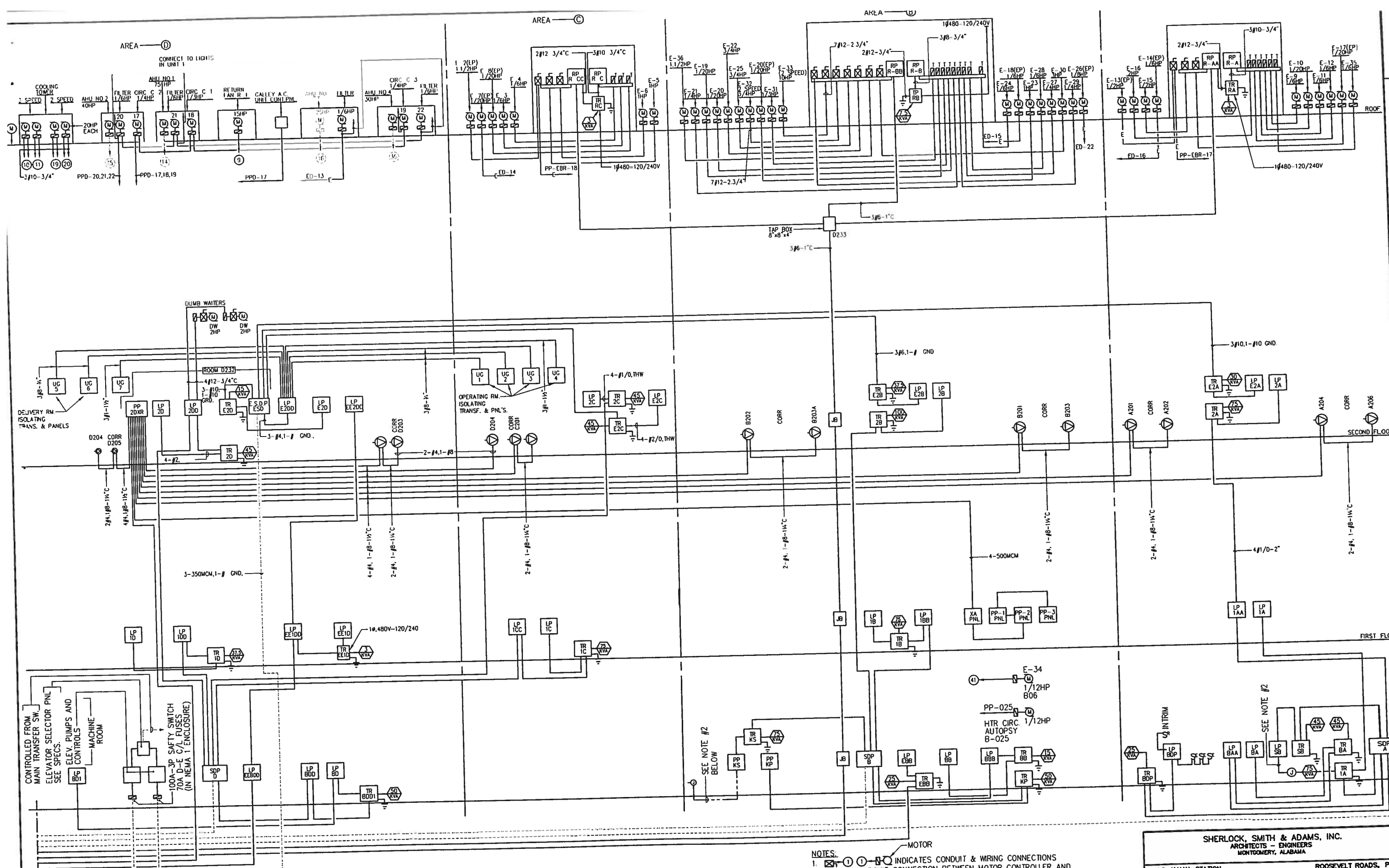

LEGEND

EXISTING TO REMAIN ————

EXISTING TO BE REMOVED - - - - - -

DEMOLITION POWER SINGLE LINE DIAGRAM - PART B

SCALE: NOT TO SCALE

NOTES:

1. ⊠—①—①—⊠—Q INDICATES CONDUIT & WIRING CONNECTIONS (BRANCH CIRCUIT CONNECTION BETWEEN MOTOR CONTROLLER AND MOTOR DISCONNECT SWITCH). MOTOR
2. CONTROL WIRING IN CONDUIT FROM CO2 SYSTEM PRESSURE SWITCH. REFER TO F.E.C. DWG. NOS. 1123599 AND 1123600.
3. FOR CONDUIT & WIRE SIZES REFER TO F.E.C. DWG. NO. 1123591.

SHERLOCK, SMITH & ADAMS, INC.
ARCHITECTS - ENGINEERS
MONTGOMERY, ALABAMA

U.S. NAVAL STATION ROOSEVELT ROADS, P.R.
REPAIRS TO NAVAL HOSPITAL

CONSTR. CONTR. NO. | SPECIFICATION NO. | NAVFAC DRWG. NO. | TF NO. | SHEET ? OF ??

DEPARTMENT OF THE NAVY
NAVY PUBLIC WORKS CENTER, JACKSONVILLE, FL
U.S. NAVAL STATION ROOSEVELT ROADS, P.R.
REPAIRS TO NAVAL HOSPITAL
DEMOLITION POWER SINGLE LINE DIAGRAM-

DESIGN BY: SWA DRAWN BY: MPC

PLATE NO. EP6-

PWC #

CIRCUIT BREAKER SCHEDULE–SWITCHGEAR GS (GENERATOR SWITCHGEAR)

DESIGNATION 52	SERVES	FRAME AMPS	POLES	MIN. SYM INT. RATING @ 480V AC AMPS x 1000	SENSOR RATING	RATING PLUG. CURR. RATING	RATING PLUG. CURR. SETTING	TRIP AMPS	OPERATION 120 VOLT AC ELECTRIC	OPERATION 120 VOLT AC MANUAL	TRIPPING DEVICES LONG DELAY	SHORT DELAY	INSTANT ANEOUS	GROUND FAULT	SHUNT TRIP	"a" CONTACTS TOTAL	"b" CONTACTS TOTAL
M1	MAIN GENERATOR NO. 1	1600	3	14.0	1200	1200	1.0	1200	•	—	•	•	—	NOTE 2	—	8	
1	SPARE	1200	3	14.0	1200	1200	0.5	600	•	—	•	•	•	—	—	4	
2	SPARE	1600	3	14.0	1200	1200	0.5	600	•	—	•	•	•	—	—	4	
3	SPARE	1600	3	14.0	800	800	0.5	400	•	—	•	•	•	—	—	4	
4	TS-EQ (S-EQ)	1600	3	14.0	1200	1200	1.0	1200	•	—	•	•	•	—	—		
5	CHILLER EM.	1600	3	14.0	1200	1200	0.5	600	•	—	•	•	•	—	—		
6	TS-C1 (S-C1)	1600	3	14.0	1200	1200	1.0	1200	•	—	•	•	•	—	—		
7	TS-C2 (S-C2)	1600	3	14.0	1000	1000	0.5	500	•	—	•	•	•	—	—		
8	TS-LS (S-LS)	800	3	14.0	800	800	0.5	400	•	—	•	•	•	—	—		
9	SPACE	—	–	–	—	—	—	—	—	—	—	—	—	—	—		
10	SPACE	—	–	–	—	—	—	—	—	—	—	—	—	—	—		
M2	GENERATOR NO. 2	1600	3	14.0	1200	1200	1.0	1200	•	—	•	•	•	NOTE 2			

NOTES:

1. NOT USED.
2. PROVIDE GROUND FAULT SENSOR FOR GROUND FAULT INDICATION, (NOT TRIPPING) PER N.E.C. ARTICLE 700–7d. SEE DETAILS AND WIRING DIAGRAM, SH. NO. EP7–2.
3. NOT USED.
4. FIXED INSTANTANEOUS TRIP – 15X.
5. PROVIDE CIRCUIT BREAKER INFORMATION MONITORING SYSTEM COMPUTER AND DISPLAY TO MONITOR EACH BREAKER IN THE SWITCHGEAR. SEE SPECIFICATIONS FOR REQUIREMENTS. SOME OF THE ITEMS TO BE MONITORED FOR EACH BREAKER INCLUDE AMPS, VOLTS, KW, KVA, P.F., HISTORY OF TRIPS ON BREAKER, HISTORY OF PEAK CURRENT, AND K.W. FOR EACH BREAKER.
6. NOT USED.
7. DRAWOUT AIR CIRCUIT BREAKER.
8. INSULATED/MOLDED CASE CIRCUIT BREAKER – DRAWOUT TYPE.

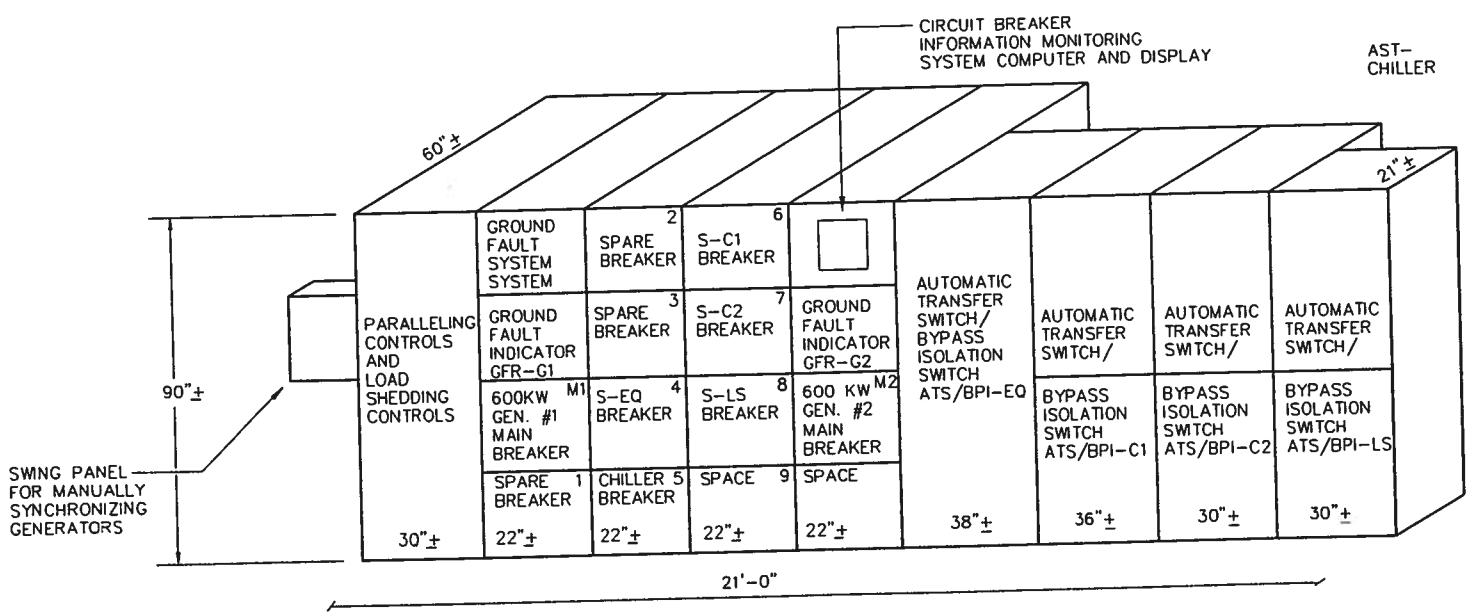

GENERATOR SWITCHGEAR (GS)/AUTOMATIC TRANSFER SWITCHES
ELEVATION

NO SCALE

LAMINATED PHENOLIC
BLACK, WHITE, BLACK

N

TO TOTALLY DISCONN
HOSPITAL, OPEN THE
1. NORMAL POWER– M.
LOCATED IN NORMA
IN ROOM A0104.

2. EMERGENCY POWER– GENE
MAIN BREAKER LOCATED
EMERGENCY SWITCHGEAR IN
ROOM A0103.

2. EMERGENCY POWER– GENERATOR
MAIN BREAKER LOCATED IN
EMERGENCY SWITCHGEAR IN
ROOM A0103.

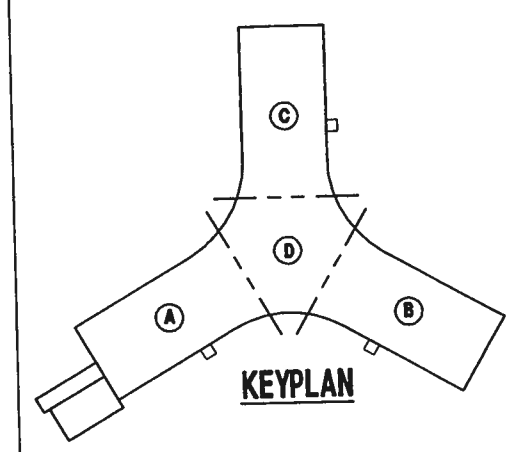

DETAIL

"NOTICE" SIGN TO BE PLACED
ON G–S PER NEC ARTICLE
700 – 8

SHERLOCK, SMITH
ARCHITECTS –
MONTGOMERY,

U.S. NAVAL STATION
REPAIRS TO NA

CONSTR. CONTR. NO.

SPECIFICATION

GROUNDING LEGEND – THIS SHEET ONLY

- #3/0 BARE COPPER, 2'-0" BELOW GRADE
- ●B CONNECTION TO SWITCHGEAR BUS
- ●G THERMITE WELD – GENERATOR FRAME
- ● THERMITE WELD – CABLE TO CABLE
- ■ GROUND PLATE – SEE DETAIL THIS SHEET AND NOTE NO. 5
- ⌒ #3/0 BARE COPPER FROM GENERATOR FRAME TO GROUND INSERT. SEE NOTE 5.

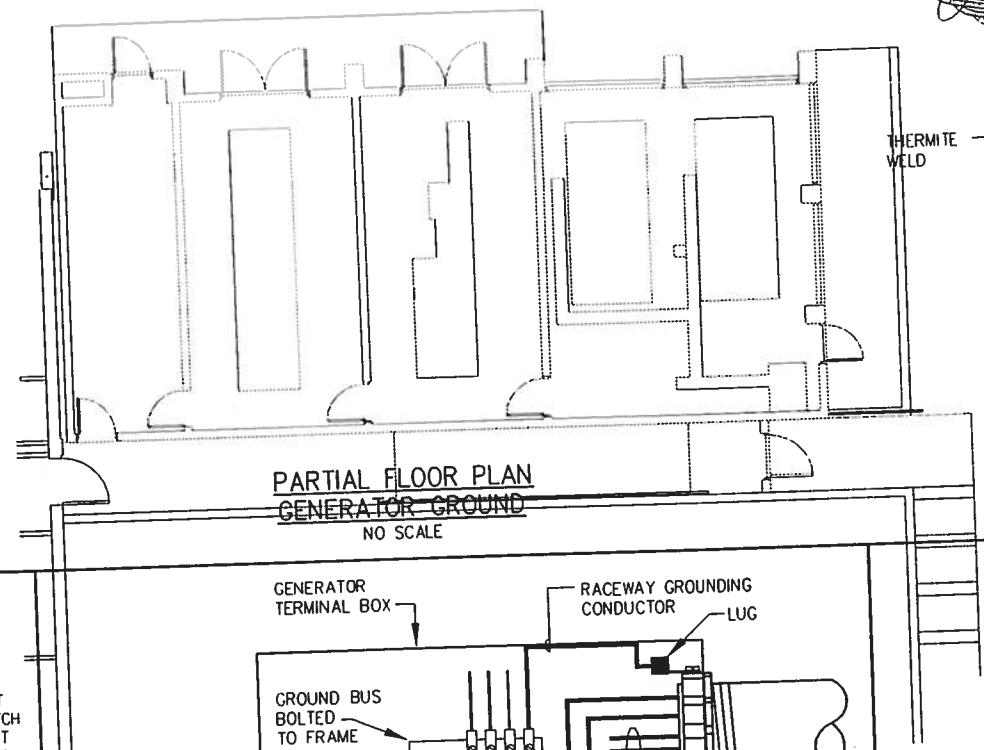

PARTIAL FLOOR PLAN
GENERATOR GROUND
NO SCALE

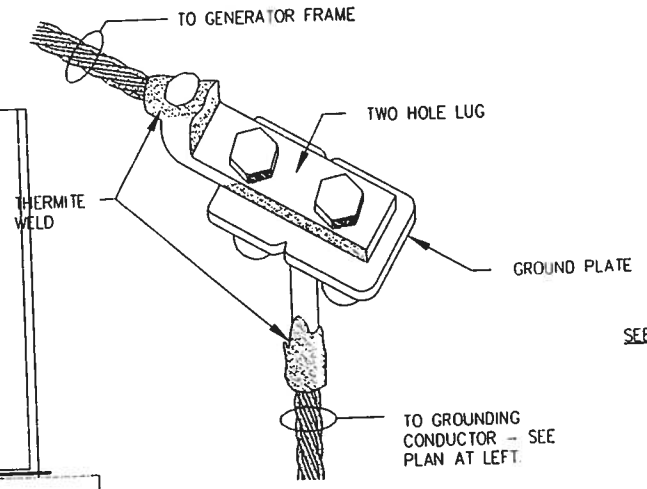

SEE NOTE 5

DETAIL
CONNECTION TO GROUND PLATE
NO SCALE

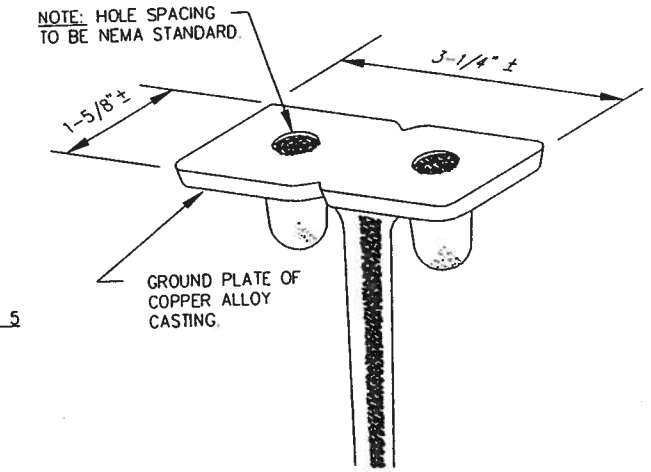

DETAIL OF GROUND PLATE
NO SCALE

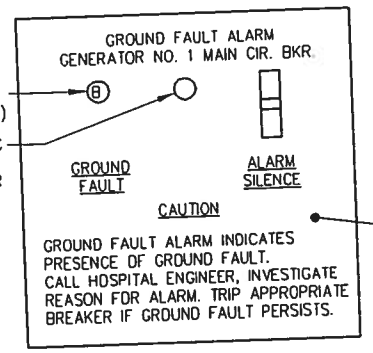

MOMENTARY CONTACT ACKNOWLEDGING SWITCH (SILENCES ALARM BUT DOES NOT EXTINGUISH ALARM LIGHT. PROVIDE AUXILIARY RELAY).

302 STAINLESS STEEL PLATE – ENGRAVED AS SHOWN.

DETAIL
LOCAL GROUND FAULT INDICATOR
ONE REQUIRED AT GENERATOR
MAIN CIRCUIT BREAKER.
NO SCALE

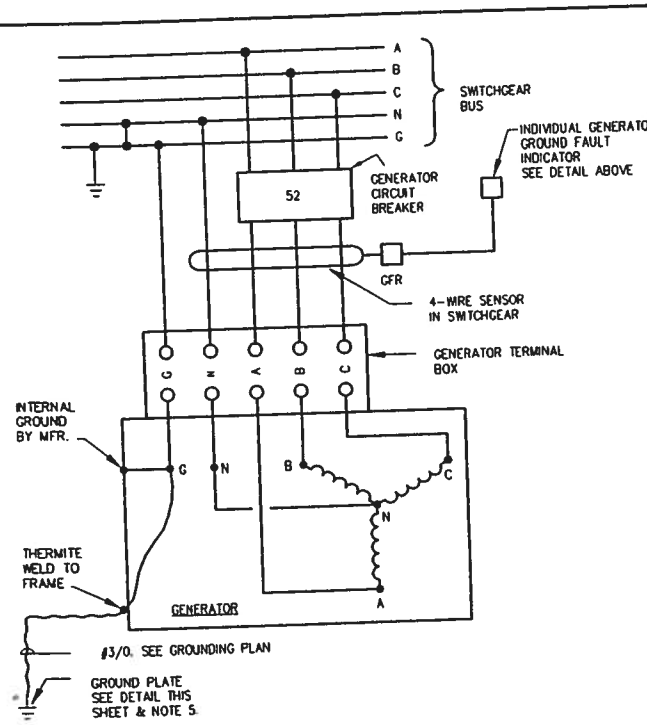

GENERATOR GROUNDING AND
GROUND FAULT INDICATION WIRING DIAGRAM
NO SCALE

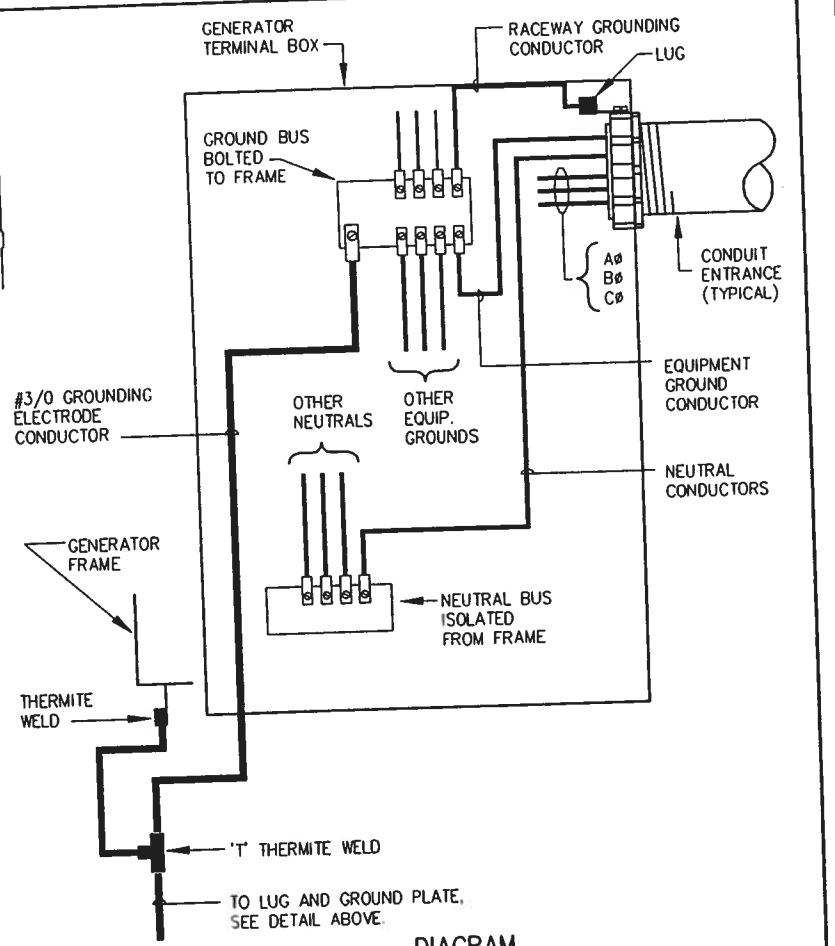

DIAGRAM
GENERATOR TERMINAL BOX
NO SCALE

NOTE: NEUTRAL IS NOT CONNECTED TO GROUND AT GENERATOR BUT IN SWITCHGEAR.

GENERAL NOTES – THIS SHEET

1. FOR SYMBOLS USED IN SINGLE LINE DIAGRAM AND FEEDER SCHEDULE SEE SHEET E00-3.
2. FOR ELEVATIONS OF SWITCHGEAR GS AND CIRCUIT BREAKER SCHEDULE SEE SHEET EP7-1.
3. SWITCHGEAR IS IN ROOM A0103. GENERATOR IN ROOM A0102.
4. SEE SHEET EP8-3 FOR GROUNDING DETAILS.
5. INSTALL GROUND PLATES SO THAT TOPS ARE FLUSH WITH THE FINISHED FLOOR. PROTECT SURFACE OF PLATE DURING CONSTRUCTION. PROVIDE TWO HOLE LUGS, THERMITE WELD #3/0 BARE COPPER CONDUCTOR AT LUG AND AT GENERATOR FRAME.
6. NOT USED

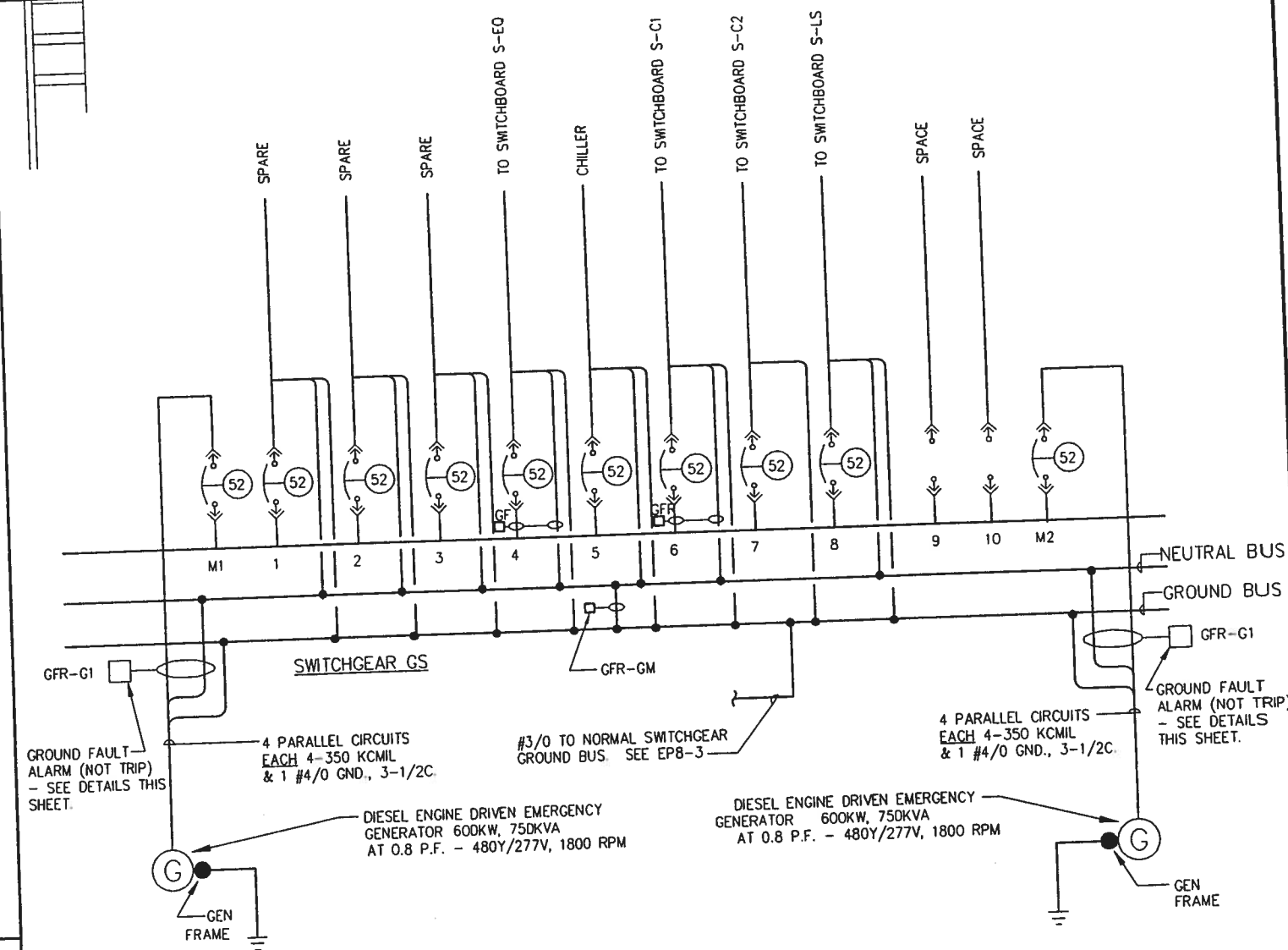

SINGLE LINE DIAGRAM
ESSENTIAL ELECTRICAL SYSTEM
NO SCALE

NOTES
1. SEE SHEET EP7-1 FOR CIRCUIT BREAKER SCHEDULE AND ELEVATION OF GS
2. PROVIDE CIRCUIT BREAKER INFORMATION MONITORING SYSTEM AS DESCRIBED IN NOTE 1 ON SHEET-EP6-1.

SHERLOCK, SMITH & ADAMS, INC.
ARCHITECTS – ENGINEERS
MONTGOMERY, ALABAMA

U.S. NAVAL STATION ROOSEVELT ROADS, P.R.
REPAIRS TO NAVAL HOSPITAL

CONSTR. CONTR. NO. | SPECIFICATION NO. | NAVFAC DRWG. NO. | TF NO. | SHEET ? OF ??

DESIGN BY: SWA
DRAWN BY: CBN
FILM BY: DER
APPROVED:

ENG. DIV. DIR. | DATE | SATISFACTORY TO: | DATE

REVISION DESCRIPTION | DATE

DEPARTMENT OF THE NAVY
NAVAL FACILITIES ENGINEERING COMMAND
NAVY PUBLIC WORKS CENTER, JACKSONVILLE, FL
U.S. NAVAL STATION ROOSEVELT ROADS, P.R.
REPAIRS TO NAVAL HOSPITAL
GENERATOR SWITCHGEAR DETAILS AND ELEVATION

PLATE NO. EP7-

PWC #

AUTOMATIC TRANSFER SWITCH – BYPASS/ISOLATION SWITCH SCHEDULE

		AUTOMATIC TRANSFER SWITCH							ASSOCIATED BYPASS/ISOLATION SWITCH					
							WITHSTAND CURRENT RATING						WITHSTAND CURRENT RATING	
FUNCTION NOTE 1	LOCATION ROOM NO.	DESIGNATION	MIN. CONT. CURRENT RATING IN AMPS AT 480V. A.C.	SWITCHED POLES NOTE 2	WIRES NOTE 3	TRANSFER TIME DELAY TO EMER. NOTE 4	MIN FAULT CURR. IN AMPS AT 480V AC NOTE 5	DURATION CYCLES	DESIGNATION	MIN. CONT. CURRENT RATING IN AMPS AT 480V. A.C.	SWITCHED POLES NOTE 2	WIRES NOTE 3	MIN FAULT CURR. IN AMPS AT 480V AC NOTE 5	DURATION CYCLES
LS	A0103	TS-LS	400	4	5	NO DELAY	35,000	3	BP/I-LS	400	4	5	35,000	3
C1	A0103	TS-C1	1200	4	5	2 SEC	65,000	3	BP/I-C1	1200	4	5	65,000	3
C2	A0103	TS-C2	500	4	5	NO DELAY	42,000	3	BP/I-C2	500	4	5	42,000	3
EQ	A0103	TS-EQ	1200	4	5	15 SEC	65,000	3	BP/I-EQ	1200	4	5	65,000	3
CHILLER	A0103	B-CHILLER	600	3	4	20 SEC	42,000	3	–	–	–	–	–	–
–	–	–	–	–	–	–	–	–	–	–	–	–	–	–

NOTES:

1. LS= LIFE SAFETY BRANCH
   CC= CRITICAL BRANCH
   Q= EQUIPMENT BRANCH
   QR= EQUIPMENT BRANCH
   (LS, CC) – EMERGENCY SYSTEM; (LS, CC, Q, QR) – ESSENTIAL ELECTRICAL SYSTEM
2. 3- POLE SWITCHES HAVE NO NEUTRAL
   4- POLE SWITCHES HAVE SWITCHED NEUTRALS
3. 4- WIRE SWITCHES, PHASES A, B, C AND GROUND
   5- WIRE SWITCHES, PHASES A, B, C, NEUTRAL AND GROUND
4. AFTER PROPER VOLTAGE AND FREQUENCY HAVE BEEN REACHED
5. AT POWER FACTOR BETWEEN 0.0 AND APPROXIMATELY 0.2
6. SEE SPECIFICATION SECTION AUTOMATIC TRANSFER AND BYPASS/ISOLATION SWITCHES
7. OMMITTED NOTE
8. PROVIDE IN-PHASE MONITORS OR PROGRAMMED TIME DELAY IN OPEN POSITION FOR ALL TRANSFER SWITCHES
9. BYPASS ISOLATION SWITCHES SHALL PROVIDE FOR REMOVAL OF AUTOMATIC TRANSFER SWITCH WITHOUT POWER INTERUPTION
10. PROVIDE PRE-TRANSFER SIGNAL TO ALL ELEVATOR CONTROLLERS FROM TS-Q. CONTACT SHALL CLOSE IN ADVANCE OF A TRANSFER TO EMERGENCY POWER FROM NORMAL POWER DURING TESTING AND IN ADVANCE OF A TRANSFER OF NORMAL POWER FROM EMERGENCY POWER. ALTER ELEVATOR CONTROLS IF NECESSARY TO ACCEPT PRE-TRANSFER SIGNAL AND TO OPERATE PROPERLY AS RECOMMENDED BY MANUFACTURER.
11. LOAD SHEDDING/RESTORATION SCHEMES

SHOULD THE NORMAL SUPPLY TO ONE AUTOMATIC TRANSFER SWITCH FAIL, BOTH ENGINE GENERATOR SETS SHALL START, AND BE CONNECTED TO THE BUS. THE LOAD SHEDDING/RESTORATION SYSTEM SHALL MONITOR THE LOAD ON THE GENERATING SYSTEM. IF THE LOAD REMAINS BELOW 450KW FOR A PERIOD OF 14 MINUTES THE LOAD/RESTORATION SYSTEM SHALL SHUT DOWN ONE GENERATOR. THE LOAD SHALL CONTINUE TO BE MONITORING AND IF IT RISES ABOVE 510KW THE SHED GENERATOR SHALL BE RESTORED TO SERVICE.

LOAD SHEDDING SCHEMES SHALL BE AS FOLLOWS:

WHEN THE SYSTEM SENSES THAT ONE GENERATOR IS NOT ON LINE FOR ANY REASON, THE FOLLOWING LOADS SHALL BE SHED:

LOAD	TRIP
S-EQ	GS: 3

WHEN THE SYSTEM SENSES THAT BOTH GENERATORS ARE RUNNING AT 10% OVERLOAD, THE FOLLOWING LOADS SHALL BE SHED:

LOAD	TRIP
S-EQ	GS: 3

LOAD RESTORATION SHALL BE AS FOLLOWS:

IF ONE GENERATOR HAS FAILED AND IS RESTORED TO SERVICE ALL LOADS WHICH WERE SHED SHALL BE RESTORED.
IF THE LOAD HAS BEEN SHED BECAUSE BOTH GENERATORS ARE 10% OVERLOADED, THE LOAD SHALL NOT BE RESTORED.

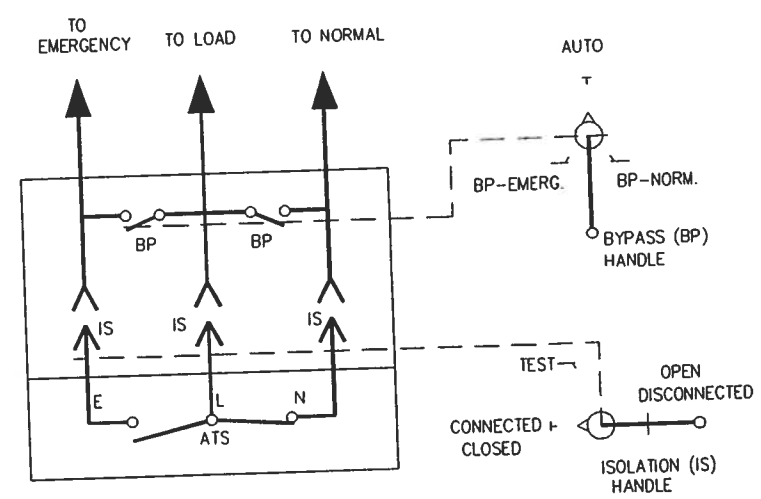

AUTOMATIC TRANSFER SWITCH/BYPASS ISOLATION SWITCH POWER DIAGRAM

1/8"=1'-0"

SHERLOCK, SMITH & ADAMS, INC.
ARCHITECTS – ENGINEERS
MONTGOMERY, ALABAMA

U.S. NAVAL STATION ROOSEVELT ROADS, P.R.
REPAIRS TO NAVAL HOSPITAL
–

CONSTR. CONTR. NO. | SPECIFICATION NO. | NAVFAC DRWG. NO. | IF NO. | SHEET ? OF ??

DEPARTMENT OF THE NAVY
NAVY PUBLIC WORKS CENTER, JACKSONVILLE, FL
NAVAL FACILITIES ENGINEERING COMMAND
U.S. NAVAL STATION ROOSEVELT ROADS, P.R.
REPAIRS TO NAVAL HOSPITAL
LOAD SHEDDING AND GENERATOR CONTROLS

REVISION DESCRIPTION | DATE
ENG. DIV. DIR.: | DATE
SATISFACTORY TO: | DATE
DESIGN BY: SWA | DRAWN BY: CBN

PLATE NO. EP7.

PWC #

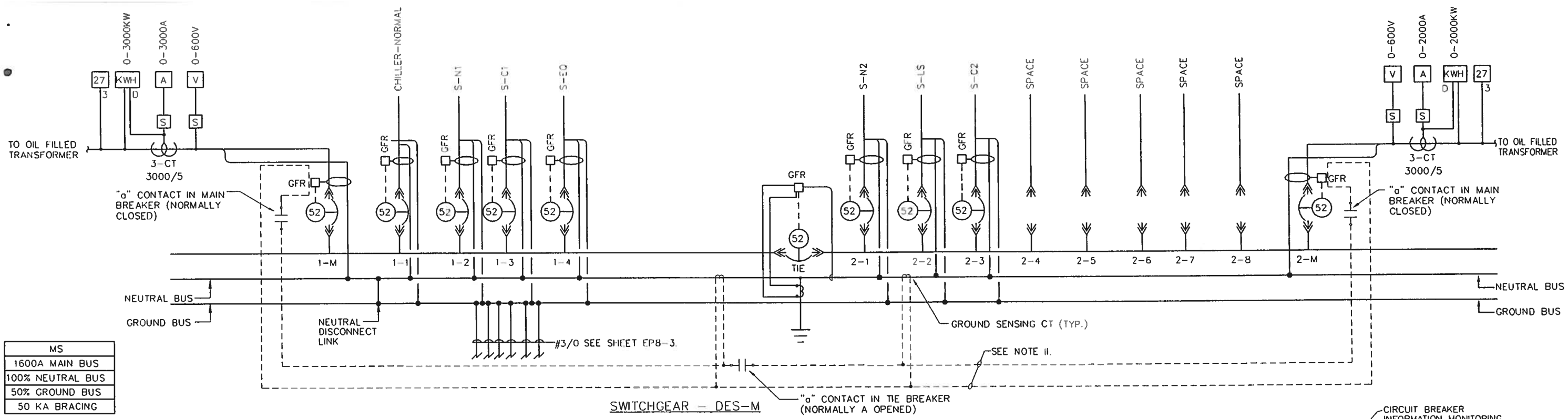

MS
1600A MAIN BUS
100% NEUTRAL BUS
50% GROUND BUS
50 KA BRACING

CIRCUIT BREAKER SCHEDULE - DES-M

DESIGN-ATION 52	SERVES	FRAME AMPS	POLES	MIN. SYM. INT. RATING @480V AC AMPS X 1000	SENSOR RATING	RATING PLUG CURRENT RATING	RATING PLUG CURRENT SETTING	TRIP AMPS	OPERATION 120 VOLTS AC ELECTRIC	OPERATION 120 VOLTS AC MANUAL	TRIPPING DEVICES LONG DELAY	TRIPPING DEVICES SHORT DELAY	TRIPPING DEVICES INSTANT-ANEOUS	TRIPPING DEVICES GROUND FAULT	TRIPPING DEVICES SHUNT TRIP	AUXILIARY CONTACTS (IN ADDITION TO THOSE REQ'D FOR BKR. OP.) 'a' CONTACTS TOTAL	AUXILIARY CONTACTS 'b' CONTACTS TOTAL	AUXILIARY CONTACTS BELL ALARM CONTACT	REMARKS	DESIGN-ATION 52
1-M	MAIN-NO. 1	3000	3	35.2	3000	3000	1.0	3000	•	--	•	•	•	•	--	4	4	•	8	1-M
1-1	CHILLER-NORMAL	600	3	35.2	1200	1200	0.5	600	•	--	•	•	•	•	--	4	4	•	9	1-1
1-2	S-N1	1600	3	35.2	1000	1000	1.0	1000	•	--	•	•	•	•	--	4	4	•	9	1-2
1-3	S-C1	1600	3	35.2	1200	1200	1.0	1200	•	--	•	•	•	•	--	4	4	•	9	1-3
1-4	S-EQ	1600	3	35.2	1200	1200	1.0	1200	•	--	•	•	•	•	--	4	4	•	9	1-4
	TIE BREAKER	3000	3	35.2	3000	3000	1.0	3000	•	--	•	•	•	--	--	4	4	•	8	
2-1	S-N2	1600	3	35.2	1000	1000	1.0	1000	•	--	•	•	•	•	--	4	4	•	9	2-1
2-2	S-LS	1600	3	35.2	1000	800	0.5	400	•	--	•	•	•	•	--	4	4	•	9	2-2
2-3	S-C2	2000	3	35.2	1000	1000	0.5	500	•	--	•	•	•	•	--	4	4	•	9	2-3
2-4	CHILLER-EMERGENCY	1200	3	35.2	600	600	1.0	600	•	--	•	•	•	•	--	4	4	•	9	2-4
2-5	SPACE	1600	3	35.2	-	-	-	-	•	--	•	•	•	--	--	4	4	•	9	2-5
2-6	SPACE	1600	3	35.2	-	-	-	-	•	--	•	•	•	•	--	4	4	•	9	2-6
2-7	SPACE	1600	3	35.2	-	-	-	-	•	--	•	•	•	•	--	4	4	•	9	2-7
2-8	SPACE	1600	3	35.2	-	-	-	-	•	--	•	•	•	•	--	4	4	•	9	2-8
2-M	MAIN-NO. 2	3000	3	35.2	3000	3000	1.0	3000	•	--	•	•	•	•	--	4	4	•	8	2-M

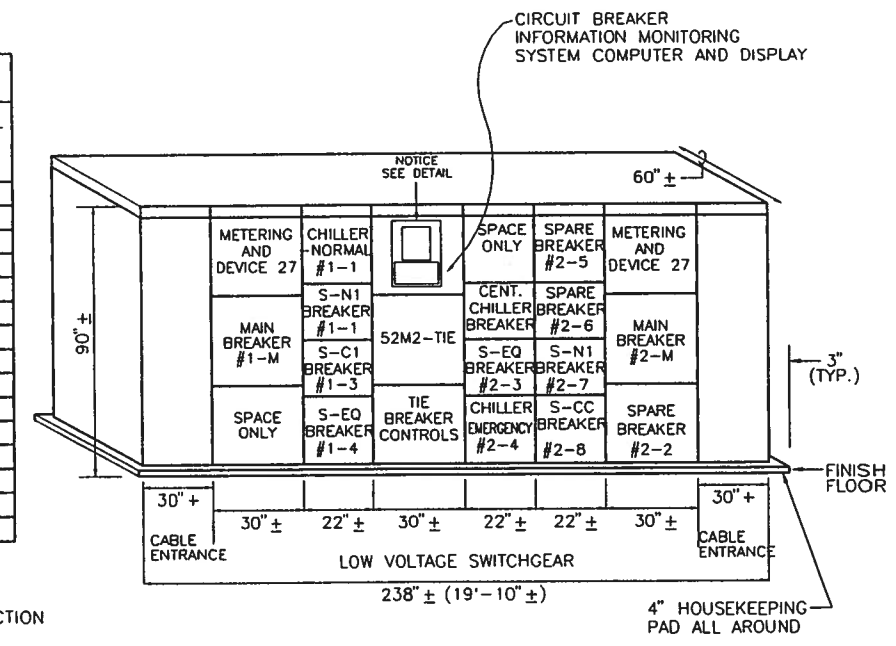

ELEVATION
DOUBLE ENDED SWITCHGEAR DES-M
NO SCALE

NOTES:

1. PROVIDE CIRCUIT BREAKER INFORMATION MONITORING SYSTEM COMPUTER AND DISPLAY TO MONITOR EACH BREAKER IN THE SWITCHGEAR. SEE SPECIFICATIONS FOR REQUIREMENTS. SOME OF THE ITEMS TO BE MONITORED FOR EACH BREAKER INCLUDE AMPS, VOLTS, KW, KVA, P.F., HISTORY OF TRIPS ON EACH BREAKER, HISTORY OF PEAK CURRENT, AND KW FOR EACH BREAKER. THIS IS IN ADDITION TO "UTILITY" METERING REQUIRED AND SHOWN ON SINGLE LINE MECHANICAL YARD.
2. IF ONE PAD-MOUNTED TRANSFORMER GOES DOWN, THE SEQUENCE FOR LOAD-SHEDDING SHALL BE CONDUCTED:
   A. CENTRAL CHILLER
   B. SWITCHBOARD S-N1
   C. SWITCHBOARD S-EQ1

   UNTIL THE LOAD ONE THE OTHER PAD-MOUNTED TRANSFORMER IS STABILIZED. PROVIDE PLC'S AND ALL NECESSARY HARDWARE TO ACCOMPLISH THE ABOVE LOAD SHEDDING SCHEME. PROVIDE INDICATION FOR CIRCUIT BREAKERS THAT HAVE BEEN "TRIPPED BECAUSE OF LOAD SHEDDING". PROVIDE LOAD-SHEDDING/RESTORATION CAPACITY FOR ITEMS IN A), B), C).
3. SIZE FEEDERS AT BREAKER "TRIP AMPS" IN ACCORDANCE WITH SCHEDULE AND NOTES ON E00-3.
4. FOR SYMBOLS USED IN SINGLE LINE DIAGRAMS, SEE SHEET EP6-1.
5. FOR ELEVATION AND CIRCUIT BREAKER SCHEDULES FOR LOW VOLTAGE SWITCHGEAR MS, SEE THIS SHEET.
6. NOT USED.
7. NOT USED.
8. DRAWOUT AIR CIRCUIT BREAKER.
9. INSULATED/MOLD CASE CIRCUIT BREAKER-DRAWOUT TYPE.
10. ALL CIRCUIT BREAKERS WITH SOLID STATE TRIPPING DEVICES SHALL HAVE THE FOLLOWING FUNCTIONS: LONG TIME PICKUP, LONGTIME DELAY, SHORT TIME PICKUP, SHORT TIME DELAY, SHORT TIME I^2t, ADJUSTABLE INSTANTANEOUS PICK-UP (FOR MAIN AND TIE BREAKERS), FIXED INSTANTANEOUS PICKUP (FOR FEEDER BREAKERS), GROUND FAULT PICK-UP AND GROUND FAULT DELAY.
11. EXPLANATION OF MAIN BREAKER AND GROUND FAULT PROTECTION SCHEME:
    A. THE SYSTEM GROUND CONNECTION IS AT THE TIE BREAKER AS SHOWN. DO NOT GROUND AT THE TRANSFORMERS. THE FEEDER NEUTRALS MUST CONNECT TO THE NEUTRAL BUS BETWEEN THE MAIN AND TIE AS SHOWN.
    B. THE MAIN BREAKERS ARE TO HAVE LONGER TIME DELAY SETTINGS THAN THE TIE BUT ARE OTHERWISE INTERCHANGEABLE.

    EXPLANATION: UNDER NORMAL CONDITIONS THE TIE WILL BE OPEN. NORMAL NEUTRAL CURRENT WILL NOT GO THRU THE MAIN BREAKER GROUND SENDING CT'S DUE TO THEIR PHYSICAL LOCATION. A BUS GROUND FAULT WILL TRIP THE MAIN BREAKER FOR ITS BUS. WITH THE TIE CLOSE AND AN MAIN OPEN. THE AUXILIARY CONTACTS SET UP A DIFFERENTIAL SO NORMAL NEUTRAL CURRENT WILL CANCEL AN NOT CAUSE FALSE TRIPPING.
12. NOT USED.
13. REFER TO SHEET EP6-1 FOR SYMBOL LEGEND.

SHERLOCK, SMITH & ADAMS, INC.
ARCHITECTS - ENGINEERS
MONTGOMERY, ALABAMA

U.S. NAVAL STATION ROOSEVELT ROADS, P.R.
REPAIRS TO NAVAL HOSPITAL
-

CONSTR. CONTR. NO. | SPECIFICATION NO. | NAVFAC DRWG. NO. | TF NO. | SHEET ? OF ??

DEPARTMENT OF THE NAVY
NAVY PUBLIC WORKS CENTER, JACKSONVILLE, FL
NAVAL FACILITIES ENGINEERING COMMAND
U.S. NAVAL STATION ROOSEVELT ROADS, P.R.
REPAIRS TO NAVAL HOSPITAL
DES-M SWITCHGEAR DETAILS AND ELEVATIONS

REVISION DESCRIPTION | DATE
DIC. DIV. DIR.: | DATE: | SATISFACTORY TO: | DATE:
DESIGN BY: SWA | DRAWN BY: CBN

PLATE NO.
EP7-4

PWC #

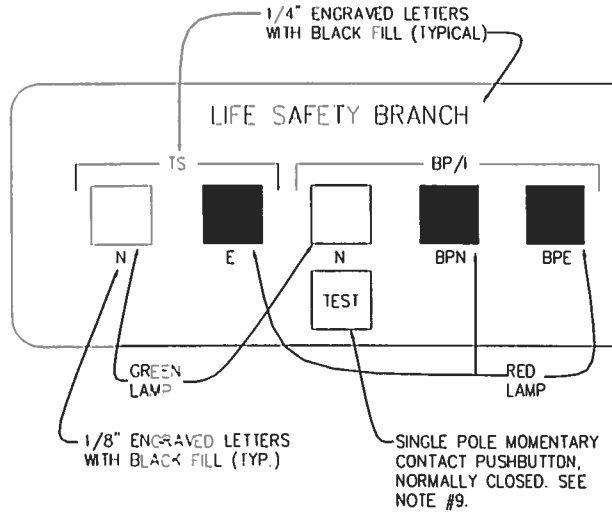

NOTES:

1. MOUNT ANNUNCIATOR IN GENERATOR SWITCHGEAR.
2. ALARM SILENCE & LAMP TEST INDICATORS ARE MOMENTARY CONTACT PUSHBUTTONS.
3. SEE TYPICAL CONNECTION DIAGRAM BELOW.
4. BUILDING OUTLINES TO BE ENGRAVED, BLACK FILLED. LETTERS "KEY PLAN-FIRST FLOOR" TO BE 1/2", ALL OTHERS TO BE 1/8".
5. LEGEND OUTLINE TO BE ENGRAVED, BLACK FILLED. LETTERS TO BE 1/8".
6. LETTERS "ALARM SILENCE", "LAMP TEST" AND "BUZZER" TO BE 1/8".
7. LETTERS "AUTOMATIC TRANSFER SWITCH BYPASS/ISOLATION SWITCH STATUS ANNUNCIATOR" TO BE 3/8".
8. ALL LETTERING TO BE ENGRAVED, BLACK FILLED.
9. TEST SWITCH SHALL MATCH LAMP COVERS IN APPEARANCE, RED FACE WITH WORD "TEST" ENGRAVED IN WHITE.
10. ANY ALARM (RED LIGHT) SHALL CAUSE BUZZER TO SOUND. ALARM SILENCE SWITCH SHALL SILENCE BUZZER, BUT NOT EXTINGUISH LAMP IN ALARM.
11. LAMP TEST SWITCH SHALL ILLUMINATE ALL LAMPS.
12. PROVIDE ALL REQUIRED TERMINAL STRIPS AND WIRING.
13. LAMP, SWITCHES, AND BUZZERS TO BE RATED FOR 28 VOLTS. TEST SWITCHES TO BE RATED IN ACCORDANCE WITH REQUIREMENTS OF AUTOMATIC TRANSFER SWITCH MANUFACTURER.
14. INTERNAL WIRING TO BE #16 FOR LAMPS, ALARM SILENCE, TEST LAMP, AND BUZZER AND #14 TO TEST SWITCHES. ALL WIRING FROM ITEMS ON DOOR TO TERMINAL STRIPS IN CABINET TO BE EXTRA FLEXIBLE SWITCHBOARD WIRE, NEATLY BUNDLED AND SERVED.
15. COVER TO BE BRUSHED ALUMINUM.

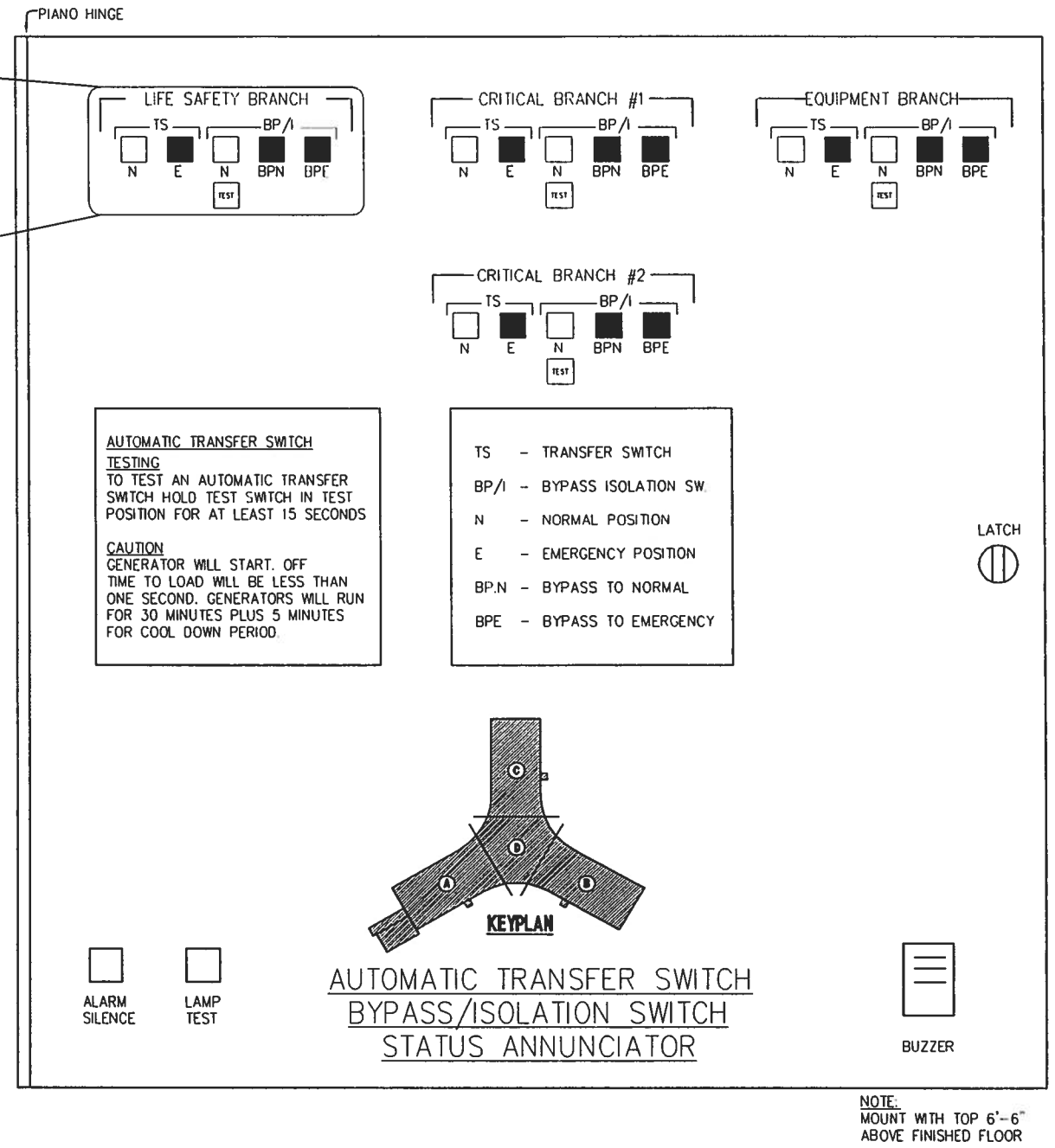

NOTE:
MOUNT WITH TOP 6'-6" ABOVE FINISHED FLOOR

ELEVATION

AUTOMATIC TRANSFER SWITCH - BYPASS/ISOLATION SWITCH STATUS ANNUNCIATOR

LOCATION: GENERATOR CONTROL CUBICLE

NOTES:

1. BOX TO BE FLUSH MOUNTED, 4-1/2" DEEP.
2. ALARM SILENCE AND LAMP TEST INDICATORS ARE MOMENTARY CONTACT PUSHBUTTONS.
3. SEE TYPICAL CONNECTION DIAGRAM BELOW.
4. ALL LETTERS TO BE ENGRAVED, BLACK FILLED.
5. ALL LETTERS TO BE 1/8" HIGH EXCEPT:
   'GENERATOR NUMBER' - 1/4"
   'NUMBERS '1' THRU '4' - 1/4"
   'GENERATOR STATUS' - 3/8"
6. SHUTDOWN SIGNALS AND LOW FUEL MAIN TANK LIGHT TO BE 'RED'.
7. OTHER LIGHT SHALL BE AMBER.
8. ANY SIGNAL SHALL CAUSE BUZZER TO SOUND. ALARM SILENCE SWITCH SHALL SILENCE BUZZER. BUT NOT EXTINGUISH LAMP IN ALARM.
9. LAMP TEST SWITCH SHALL ILLUMINATE ALL LAMPS.
10. PROVIDE ALL REQUIRED TERMINAL STRIPS AND WIRING THERETO.
11. LAMP, SWITCHES, AND BUZZERS TO BE RATED FOR 28 VOLTS, D.C.
12. INTERNAL WIRING TO BE #14 USING EXTRA FLEXIBLE SWITCHBOARD WIRE FROM ITEMS ON DOOR TO TERMINAL STRIPS IN CABINET, NEATLY BUNDLED AND SERVED.
13. COVER TO BE BRUSHED ALUMINUM.
14. STANDARD MANUFACTUR STATUS PANELS MAY BE ACCEPTABLE PROVIDED THEY HAVE THE REQUIRED SIGNALS SHOWN BELOW.

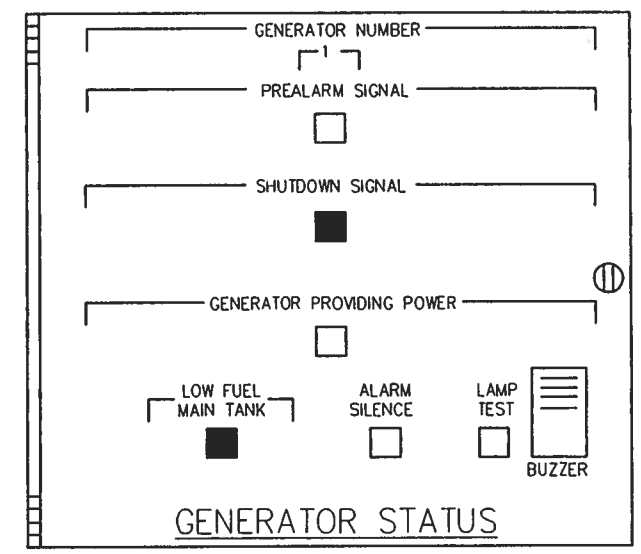

ELEVATION

REMOTE GENERATOR STATUS PANEL

LOCATION: REMOTE MOUNTED IN ROOM ___ SEE SHEET ___ WHICH IS MANNED 24 HOURS A DAY

SHERLOCK, SMITH & ADAMS, INC.
ARCHITECTS - ENGINEERS
MONTGOMERY, ALABAMA

U.S. NAVAL STATION ROOSEVELT ROADS, P.R.
REPAIRS TO NAVAL HOSPITAL
-

CONSTR. CONTR. NO.	SPECIFICATION NO.	NAVFAC DRWG. NO.	TF NO.
			SHEET ? OF ??

DEPARTMENT OF THE NAVY
NAVY PUBLIC WORKS CENTER, JACKSONVILLE, FL
NAVAL FACILITIES ENGINEERING COMMAND
U.S. NAVAL STATION ROOSEVELT ROADS, P.R.
REPAIRS TO NAVAL HOSPITAL
ATS' ELEVATIONS AND SCHEDULES

DESIGN BY: SWA
DRAWN BY: CBN
ENG. DIV. DIR.: DATE
SA/SF/ACTION TO: DATE
REVISION DESCRIPTION DATE

PLATE NO.
EP7-5

PWC #

MOTOR CONTROL CENTER – MCC-N
SERVICE VOLTAGE 480V, 3ø 4W
BUS BRACING, RMS SYMMETRICAL AMPS 42,000
MAIN MOLDED CASE SWITCH 400A
FEEDER – S-N2
BUS RATING – 600A
LOCATION RM ____
SERVICE – NORMAL

DESIGNATION	H.P	NEMA SIZE	SPACE UNIT	CIRCUIT BREAKER (M)	CIRCUIT BREAKER (T)	WIRING TYPE	NOTES
PHASE LOSS MONITOR			1A				RED PILOT ON FACE OF DOOR
MAIN SWITCH			1B		400A-3P		TRIP ELEMENTS REMOVED, 115 VDC SHUNT TRIP COIL
AHU-1	75	4R	2A	150A-3P		(5)	
SPACE		1	2B				
SPACE		1	3A				
SPACE		1	3B				
SPACE		1	3C				
SPACE		1	3D				
SPACE		1	3E				
SPACE		1	3F				
SPACE		1	4A				
SPACE		1	4B				
SPACE		1	4C				
SPACE		1	4D				
SPACE		1	4E				
SPACE		1	4F				
SPACE		1	5A				
SPACE		1	5B				
SPACE		1	5C				
SPACE		1	5D				
SPACE		1	5E				
SPACE		1	5F				
				PHASE A	PHASE B	PHASE C	
TOTAL CONNECTED LOAD (AMPS)				96.0	96.0	96.0	

SCHEDULE – 460 VOLT, 3Ø MOTORS

MOTOR DATA			FEEDER (M)			OVERCURRENT PROTECTION CIRCUIT BREAKER AMPS		MOTOR CONTROLLER			480V *** DISC. SW. NEMA-TYPE AS REQD.	CAPACITOR ****
						(M) MAGNETIC TRIP ONLY * 3 P. AMPS	(T) THERMAL MAG TRIP 3 P. AMPS	NEMA SIZE **		SPACE UNITS IN MCC	SIZE (3 POLE)	
HP	FULL LOAD AMPS	LETTER FOR DESIGN	PHASE CONDUCT.	GROUND CONDUCT	CONDUIT, INCHES, TR. SIZE			INDIV. MTD.	IN MCC			
1/2	1	M	3#12	1#12	1/2	3	15	00	1	1	30A	NO
3/4	1.4	M	3#12	1#12	1/2	3	15	00	1	1	30A	NO
1	1.8	M	3#12	1#12	1/2	3	15	00	1	1	30A	NO
1 1/2	2.6	K	3#12	1#12	1/2	3	15	00	1	1	30A	NO
2	3.4	K	3#12	1#12	1/2	7	15	00	1	1	30A	NO
3	4.8	J	3#12	1#12	1/2	7	15	0	1	1	30A	NO
5	7.6	H	3#12	1#12	1/2	15	15	0	1	1	30A	NO
7 1/2	11	H	3#12	1#12	1/2	15	20	1	1	1	30A	NO
10	14	H	3#10	1#10	3/4	30	30	1	1	1	30A	NO
15	21	G	3#10	1#10	3/4	30	40	2	2	1	30A	NO
20	27	F	3#8	1#10	1	50	60	2	2	1	60A	NO
25	34	F	3#8	1#8	1	50	70	2	2	1	60A	YES
30	40	F	3#6	1#8	1	50	80	3	3	2	60A	YES
40	52	F	3#4	1#8	1 1/4	100	100	3	3	2	100A	YES
50	65	F	3#2	1#8	1 1/4	100	100	3	3	2	100B	YES
60	77	F	3#1/0	1#6	1 1/2	100	110	4R	4R	4 1/2	100A	YES
75	96	F	3#1/0	1#6	1 1/2	150	150	4R	4R	4 1/2	200A	YES
100	124	F	3#2/0	1#6	2	150	200	4R	4R	4 1/2	200A	YES
125	156	F	3#4/0	1#4	2	225	225	5R	5R	4 1/2	200A	YES
150	180	F	3-250MCM	1#4	2 1/2	225	250	5R	5R	4 1/2	200A	YES
200	240	F	3-350MCM	1#1/0	3	400	400	5R	5R	4 1/2	400A	YES

* = MCC'S OR COMBINATION STARTERS ONLY
**R = REDUCED VOLTAGE STARTED – CLOSED TRANSITION AUTO TRANSFORMER TYPE
*** = NO FUSE DISCONNECT SWITCH UNLESS SHOWN OTHERWISE
**** = POWER FACTOR CORRECTIVE CAPACITOR FURNISHED WITH MOTOR

NOTES:

1. FOR GENERAL DETAILS OF MOTOR CONTROL CENTERS, SEE SHEET
2. FOR WIRING TYPES (1), (2), (3), (4), AND (5) SEE CONTROL WIRING DIAGRAM ON SHEET

CONTROL LEGEND

SYMBOL	DESCRIPTION
(M)	OPERATING COIL OF STARTER – 120 VOLT
(R)	RED PILOT LIGHT – 120 VOLT
(G)	GREEN PILOT LIGHT – 120 VOLT
OL	OVERLOAD RELAY CONTACT
FA	FIRE ALARM SHUTDOWN RELAY CONTACT
H A	HAND/OFF/AUTO SELECTOR SWITCH
ON OFF	ON/OFF SELECTOR SWITCH
X1–X2	SECONDARY (120V) OF CONTROL POWER TRANS. MTD IN STARTER
M-1A	NORMALLY OPEN AUXILIARY CONTACT – SHOWN 1A
M-1B	NORMALLY CLOSED AUXILIARY CONTACT – SHOWN 1B

NOTES:

1. ALL MOTOR CONTROL CENTERS SHALL BE NEMA CLASS II, TYPE 'B'.
2. MOTOR STARTER ACCESSORIES SHALL BE AS SHOWN IN THE WIRING DIAGRAMS AND AS LISTED IN THE MCC SCHEDULE.
3. MOTOR CONTROL CENTER TERMINAL CUBICLES ADJACENT TO MOTOR CONTROL CENTERS SHALL BE OF SAME CONSTRUCTION AS MOTOR CONTROL CENTERS, 20" WIDE, OF MATCHING HEIGHT & DEPTH. TERMINAL STRIPS AS DETAILED ON THIS SHEET SHALL BE PROVIDED FOR EACH TERMINAL AS INDICATED BY DRAWINGS AND SCHEDULES FOR EACH MOTOR SERVED BY THE MCC. ALL WIRING FROM TERMINALS IN THE MCC TO THE TERMINAL STRIPS IN THE TERMINAL CUBICLE SHALL BE FACTORY WIRING.
4. SEE SCHEMATIC CONTROL WIRING DIAGRAMS AT LEFT FOR WIRING TYPES (1), (2), (3), (4), AND (5), REFERENCED IN MOTOR CONTROL CENTER SCHEDULES.
5. PROVIDE EACH STARTER WITH A CONTROL POWER TRANSFORMER, 480V/120V, FUSED PER U.L.

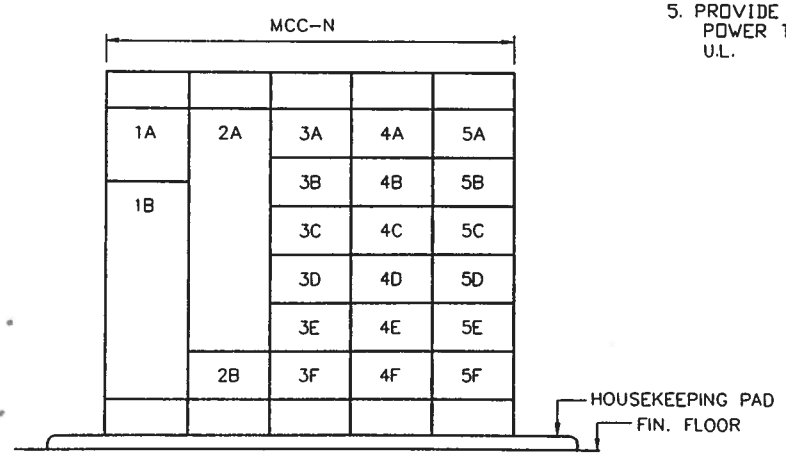

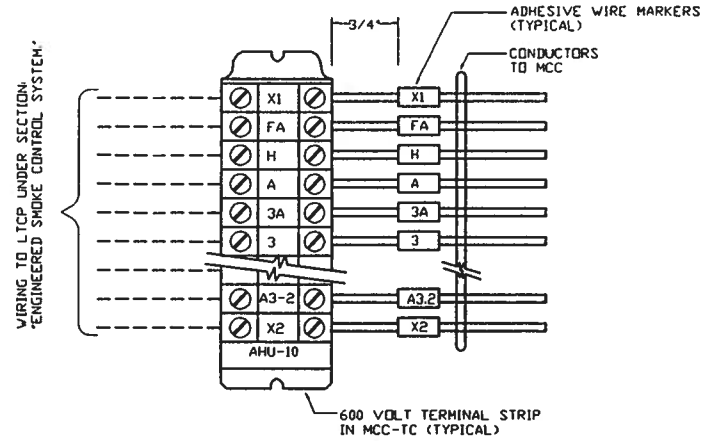

NOTES:

1. IDENTICALLY NUMBERED ADHESIVE WIRE MARKERS SHALL BE INSTALLED ON CONDUCTORS FROM THE TERMINAL STRIPS IN THE MOTOR CONTROL CENTERS TO THE TERMINAL STRIPS IN THE TERMINAL CABINETS.
2. ALL WIRE MARKERS SHALL BE APPLIED 3/4" FROM TERMINATION.
3. TERMINAL STRIP NUMBERS SHALL MATCH WIRE MARKER NUMBERS.

TYPICAL TERMINAL STRIP WIRING

NO SCALE

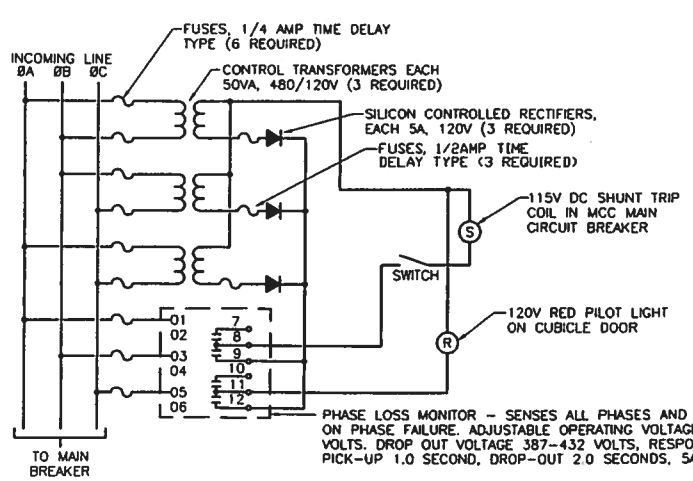

WIRING DIAGRAM – PHASE LOSS MONITOR

NO SCALE

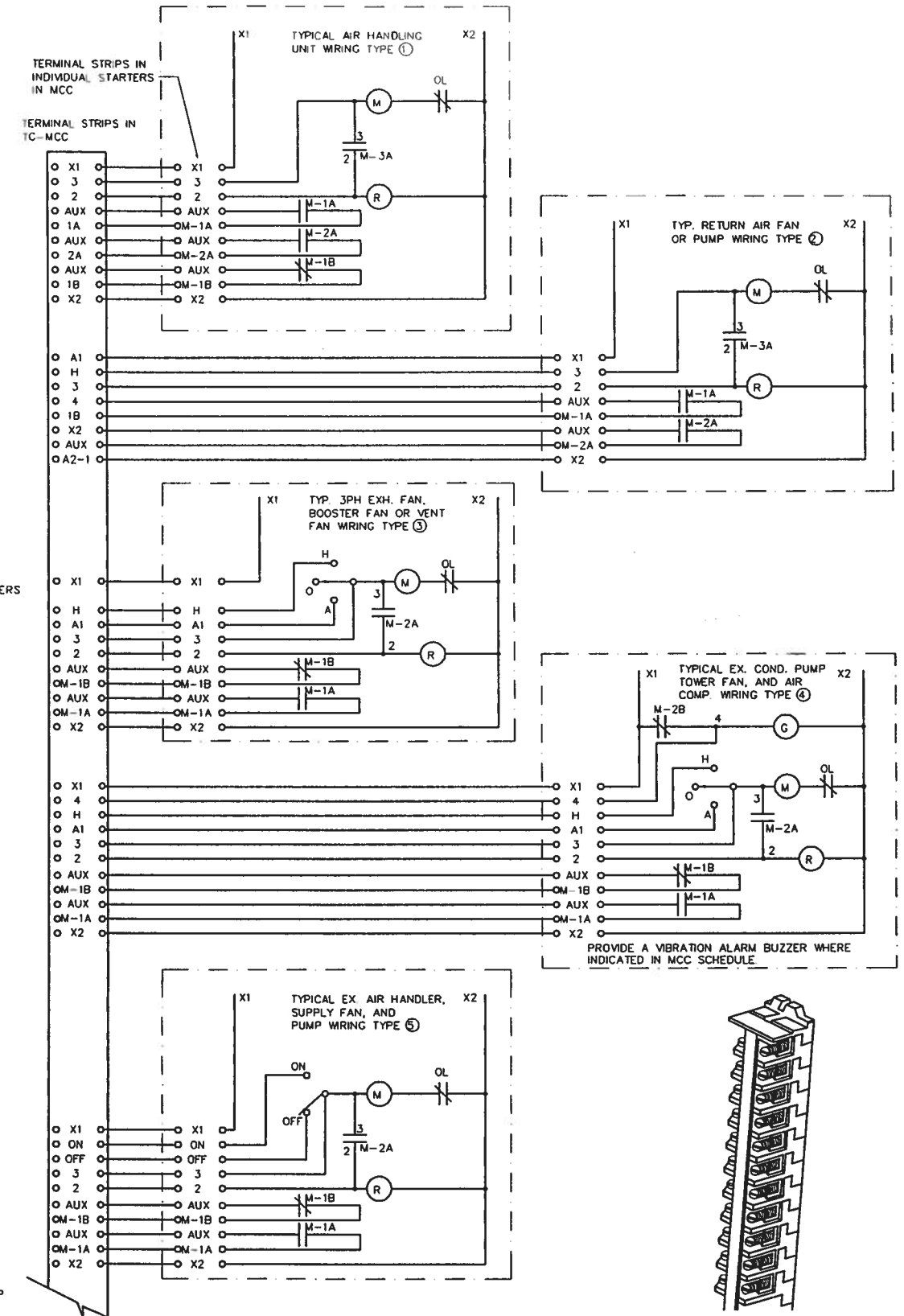

SCHEMATIC CONTROL WIRING DIAGRAM TYP. AHU'S, EF'S, AND RF'S IN MCC'S

NO SCALE

DETAIL TYPICAL TERMINAL STRIP STRIP

NO SCALE

SHERLOCK, SMITH & ADAMS, INC.
ARCHITECTS – ENGINEERS
MONTGOMERY, ALABAMA

U.S. NAVAL STATION ROOSEVELT ROADS, P.R.
REPAIRS TO NAVAL HOSPITAL

CONSTR. CONTR. NO. | SPECIFICATION NO. | NAVFAC DRWG. NO. | TF NO | SHEET ? OF ??

SEAL AREA

DATE | REVISION DESCRIPTION | ENG. DIV. DR.: DATE | SATISFACTORY TO: DATE | DESIGN BY: SWA | DRAWN BY: CBN

DEPARTMENT OF THE NAVY
NAVAL FACILITIES ENGINEERING COMMAND
NAVY PUBLIC WORKS CENTER, JACKSONVILLE, FL
U.S. NAVAL STATION ROOSEVELT ROADS, P.R.
REPAIRS TO NAVAL HOSPITAL
MCC-N ELEVATIONS AND SCHEDULE

PLATE NO.
EP8-1

PWC #

MOTOR CONTROL CENTER – MCC–Q
SERVICE VOLTAGE – 480V, 3ø 4W
BUS BRACING, RMS SYMMETRICAL AMPS 42,000
MAIN MOLDED CASE SWITCH 400A

FEEDER – S–EQ
BUS RATING – 600A
LOCATION RM ____

SERVICE – EMERGENCY

DESIGNATION	H.P.	NEMA SIZE	SPACE UNIT	CIRCUIT BREAKER (M)	CIRCUIT BREAKER (T)	WIRING TYPE	NOTES
PHASE LOSS MONITOR			1A				RED PILOT ON FACE OF DOOR
MAIN SWITCH			1B		400A–3P		TRIP ELEMENTS REMOVED, 115 VDC SHUNT TRIP COIL
AHU–2	40	3	2A	100A–3P		5	
AHU–3A	20	2	2B	50A–3P			
RF–3A	7.5	1	2C	15A–3P		5	
AHU–3B	15	2	2D	30A–3P		5	
RF–3B	7.5	1	2E	50A–3P		5	
AHU–4	40	3	3A	50A–3P		5	
CWP. #2	15	2	3B	30A–3P			
S. PUMP	15	2	3C	30A–3P		5	
A. COMP. #1	50	3	3D	100A–3P		5	
A. COMP. #2	50	3	4A	100A–3P		3	
SPACE			4B				
SPACE			4C				
SPACE			4D				
SPACE			4E				
SPARE			5A				
SPACE			5B				
SPACE			5C				
SPACE			5D				
SPACE			5E				
SPACE			5F				
				PHASE A	PHASE B	PHASE C	
TOTAL CONNECTED LOAD (AMPS)				346.0	346.0	346.0	

SCHEDULE – 460 VOLT, 3Ø MOTORS

MOTOR DATA			FEEDER (M)			OVERCURRENT PROTECTION CIRCUIT BREAKER AMPS		MOTOR CONTROLLER			480V *** DISC. SW NEMA–TYPE AS REQD.	CAPACITOR ****
HP	FULL LOAD AMPS	LETTER FOR DESIGN	PHASE CONDUCT.	GROUND CONDUCT.	CONDUIT, INCHES, TR. SIZE	(M) MAGNETIC TRIP ONLY * 3 P. AMPS	(T) THERMAL MAG. TRIP 3 P. AMPS	NEMA SIZE ** INDIV. MTD.	NEMA SIZE ** IN MCC	SPACE UNITS IN MCC	SIZE (3 POLE)	
1/2	1	M	3#12	1#12	1/2	3	15	00	1	1	30A	NO
3/4	1.4	M	3#12	1#12	1/2	3	15	00	1	1	30A	NO
1	1.8	M	3#12	1#12	1/2	3	15	00	1	1	30A	NO
1 1/2	2.6	K	3#12	1#12	1/2	3	15	00	1	1	30A	NO
2	3.4	K	3#12	1#12	1/2	7	15	00	1	1	30A	NO
3	4.8	J	3#12	1#12	1/2	7	15	0	1	1	30A	NO
5	7.6	H	3#12	1#12	1/2	15	15	0	1	1	30A	NO
7 1/2	11	H	3#12	1#12	1/2	15	20	1	1	1	30A	NO
10	14	H	3#10	1#10	3/4	30	30	1	1	1	30A	NO
15	21	G	3#10	1#10	3/4	30	40	2	2	1	30A	NO
20	27	F	3#8	1#10	1	50	60	2	2	1	60A	NO
25	34	F	3#8	1#8	1	50	70	2	2	1	60A	YES
30	40	F	3#6	1#8	1	50	80	3	3	2	60A	YES
40	52	F	3#4	1#8	1 1/4	100	100	3	3	2	100A	YES
50	65	F	3#2	1#8	1 1/4	100	100	3	3	2	100B	YES
60	77	F	3#1/0	1#6	1 1/2	100	110	4R	4R	4 1/2	100A	YES
75	96	F	3#1/0	1#6	1 1/2	150	150	4R	4R	4 1/2	200A	YES
100	124	F	3#2/0	1#6	2	150	200	4R	4R	4 1/2	200A	YES
125	156	F	3#4/0	1#4	2	225	225	5R	5R	4 1/2	200A	YES
150	180	F	3–250MCM	1#4	2 1/2	225	250	5R	5R	4 1/2	200A	YES
200	240	F	3–350MCM	1#1/0	3	400	400	5R	5R	4 1/2	400A	YES

* = MCC'S OR COMBINATION STARTERS ONLY
**R = REDUCED VOLTAGE STARTED – CLOSED TRANSITION AUTO TRANSFORMER TYPE
*** = NO FUSE DISCONNECT SWITCH UNLESS SHOWN OTHERWISE
**** = POWER FACTOR CORRECTIVE CAPACITOR FURNISHED WITH MOTOR

NOTES:

1. FOR GENERAL DETAILS OF MOTOR CONTROL CENTERS, SEE SHEET _____.
2. FOR WIRING TYPES 1, 2, 3, 4, AND 5 SEE CONTROL WIRING DIAGRAM ON SHEET _____.

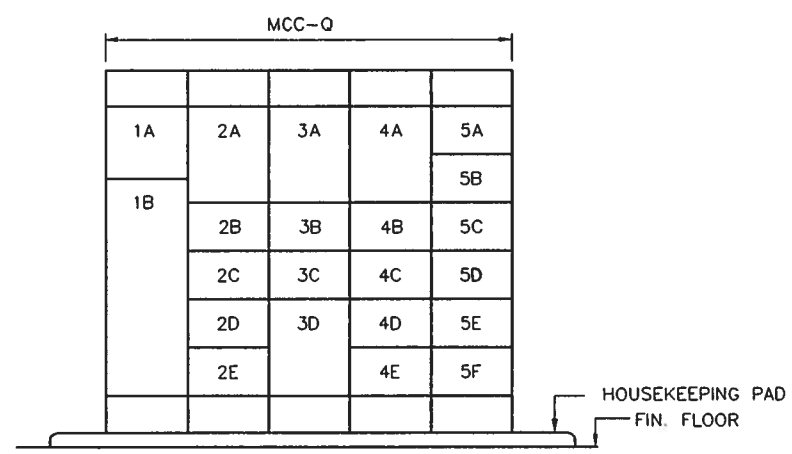

SHERLOCK, SMITH & ADAMS, INC.
ARCHITECTS – ENGINEERS
MONTGOMERY, ALABAMA

U.S. NAVAL STATION ROOSEVELT ROADS, P.R.
REPAIRS TO NAVAL HOSPITAL
–

CONSTR. CONTR. NO. | SPECIFICATION NO. | NAVFAC DRWG. NO. | TF NO. | SHEET ? OF ??

DEPARTMENT OF THE NAVY
NAVAL FACILITIES ENGINEERING COMMAND
NAVY PUBLIC WORKS CENTER, JACKSONVILLE, FL
U.S. NAVAL STATION ROOSEVELT ROADS, P.R.
REPAIRS TO NAVAL HOSPITAL
MCC–Q ELEVATIONS AND SCHEDULES

PLATE NO.
EP8-2

PWC #

REVISION DESCRIPTION | DATE
DAC. DV. DRC. ____ DATE ____
SATISFACTORY TO: ____ DATE ____

DESIGN BY: SWA
DRAWN BY: CBN